MANUAL INSTRUCTION

TIN TRUNK

IS301BK01A



We offer a diverse range of products to meet the needs of customers.

Indoor Furniture

We are a professional furniture provider with top-notch factories and outstanding designs, Our mission is to provide consumers with new lifestyles. By collecting consumer feedback, we constantly improve our products and create more choices for consumers. If you want to create your space, We are an ideal choice.

Always.

WARNING

1. Two or more people are required for assembly.
2. A ladder and electric drill may be necessary.
3. Do not erect the structure in heavy winds or inclement weather.
4. Do not leave up this unit for extended periods of time, as it is not a permanent structure or designed to withstand sustained wind or rain. It is a temporary, portable shelter that shields you from sunlight and rain. The screens also block flying insects.
5. Do not use candles, matches, or any open flames near the tent.
6. To better align the screws for practical situations, do not fully tighten screws initially.
7. Professional installation is highly recommended

WARNING

- In case of windy weather, please do not stand in the gazebo.
- Please do not stand under the gazebo in case of heavy snowfall.
- For safety, please use expansion screws to reinforce the posts to the ground.
- In windy weather, please tighten the fence and netting to avoid tearing in high winds.
- In extreme weather conditions, you can use a rope to pull the four corners of the gazebo to keep it stable.
- Please clear the snow off the roof in time for the heavy snowfall.
- Make sure all screws are tightened before use.
- Repeat to confirm all screws, buckles and straps every 90 days.
- Please keep all screws loose during the assembly process and tighten them after completing the installation.
- Do not use or store next to a pole with an open flame or flammable chemicals.
- Please note that some parts have sharp edges and should be handled with gloves.
- If any parts are missing, broken, damaged or worn, discontinue use of the product until repairs are made or factory replacement parts are installed.
- Installation of the product in a manner that does not conform to the manufacturer's instructions may result in the loss of the warranty policy for this product.
- Consult your local authorities to check if permits are required to erect the shed .

WARNING

WARNING: This product can expose you to Carbon monoxide, which is known to the State of California to cause birth defects or other reproductive harm. For more information go to www.P65Warnings.ca.gov

TOOLS REQUIRED

EQUIPMENT REQUIREED(Not included in boxes)

*NOTE:Tools / equipment are not shown to actual size and scale.


LEVEL


RUBBER MALLET


PHILLIPS SCREW


DRILL


ALLEN KEY

EQUIPMENT REQUIREED(Not included in boxes)

*NOTE:Equipment are not shown to actual size and scale.


SAFETY HAT


GLOVES


SAFETY GOGGLES


STEPLADDER
(6.5Ft Or More)

Matters needing attention


Three or more people are required for assembloe


Do not fully tighten screws prior to complete assembly

INSTALLATION PRECAUTIONS

Right

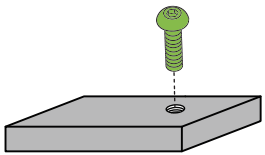

Wrong

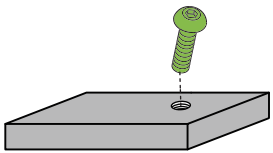

*The screws need to be aligned with the hole when installing.

*If the screw cannot be tightened ,please do not tight forcely ,as this may cause damage to the threaded hole.The correct way is to withdraw the screw and adjust to the right angle ,and try to tighten the screw again.

Part 2: Material list

As this item contains many parts, please read the installation instruction carefully before installation . Please use toolsproperly and carefully. If you have any questions about theproduct and installation, please contact us.

(please check before installation)

Hareware list

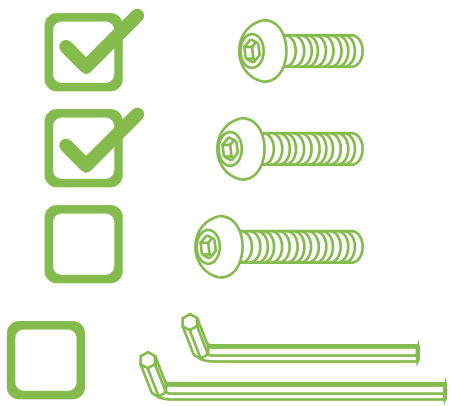

P7

Parts list

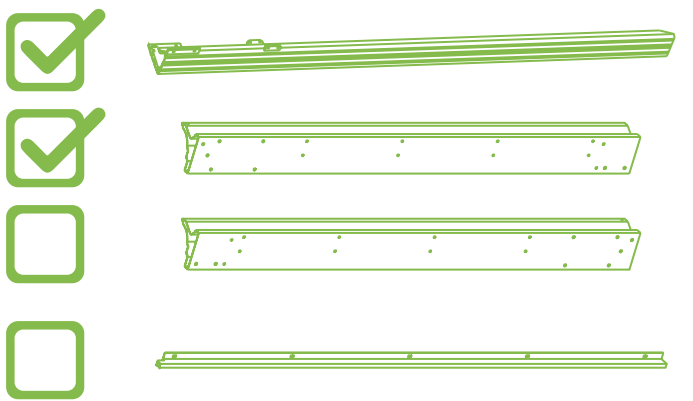

P8-P9

PARTS



L36-W5 X 7



L36-W5K X 2



L36-12 X 4



L36-W2HL X 1



L36-W2HR X 1



L36-W3C X 4

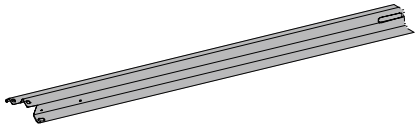

L36-1 X 2



L36-2 X 2

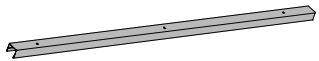

L36-3 X 2



L36-4 X 1

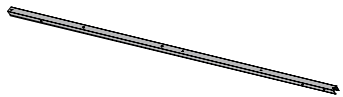

L36-5 X 1



L36-6 X 2

PARTS



L36-7 X 1



L36-8 X 1

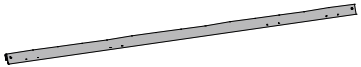

L36-9 X 1



L36-10 X 2



L36-11 X 2

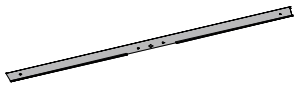

L36-13 X 1

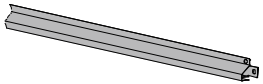

L36-UA X 2

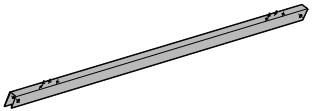

L36-DA X 2

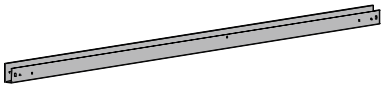

L36-DLA X 1



L36-DRA X 1

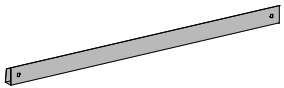

DDA X 4

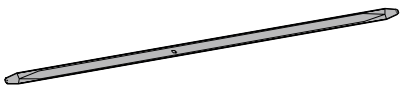

L36-DBA X 4

PARTS

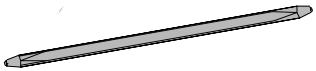

L36-DXA X 2

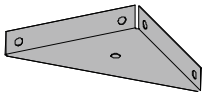

T-F X 4

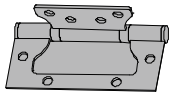

DH X 4

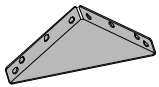

T-G X 4

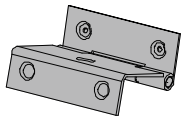

DH2 X 4



GG1 X 2



EE X 2

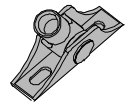

FF X 2

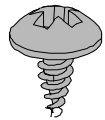

F1 X 236

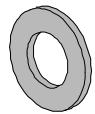

V2 X 32

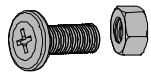

F2 X 24

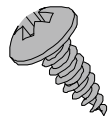

F3 X 32

PARTS



DF X 2

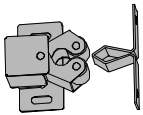

DB X 1

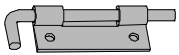

DC X 2

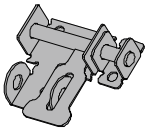

DE X 1



SL X 30

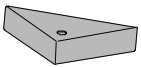

GD X 4



GC X 2



M4 X 1

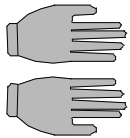

ST X 2

1

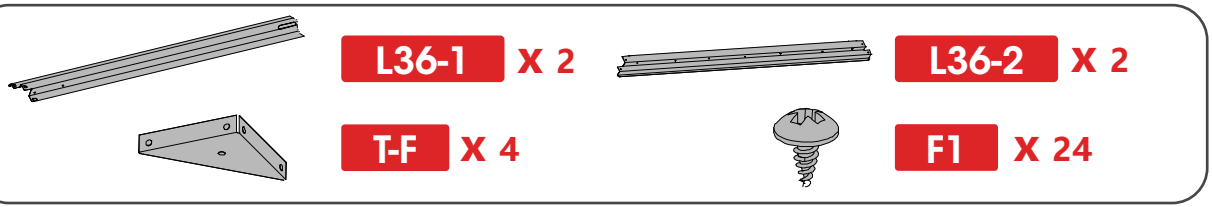
L36-1 X 2
L36-2 X 2
T-F X 4
F1 X 24

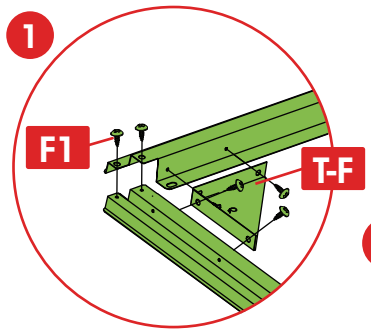
1
F1
T-F

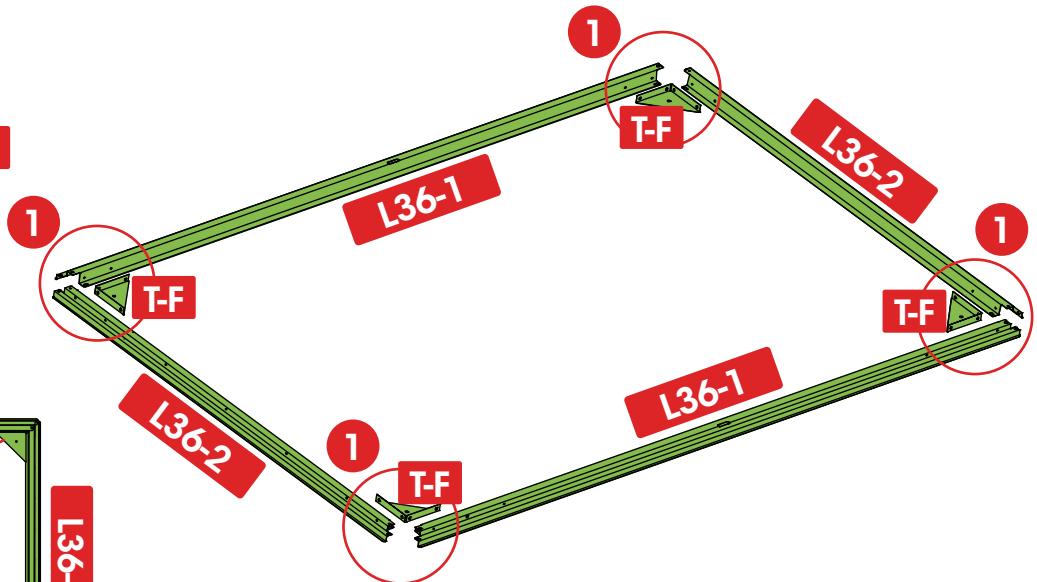
1
T-F
L36-2
1
T-F
L36-1
1
T-F
L36-2
L36-1
1
T-F

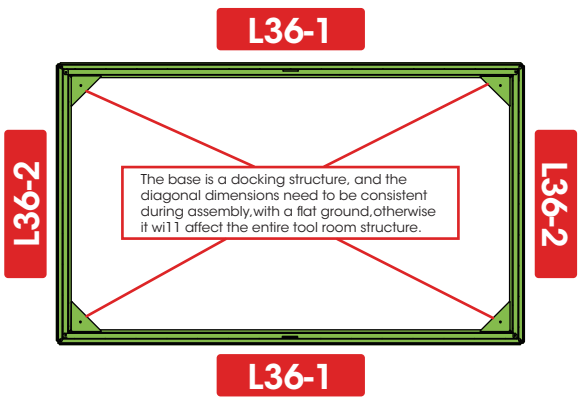
L36-1
L36-2
L36-2
L36-1
The base is a docking structure, and the diagonal dimensions need to be consistent during assembly,with a flat ground,otherwise it wi11 affect the entire tool room structure.

2

L36-W3C X 4

F1 X 4

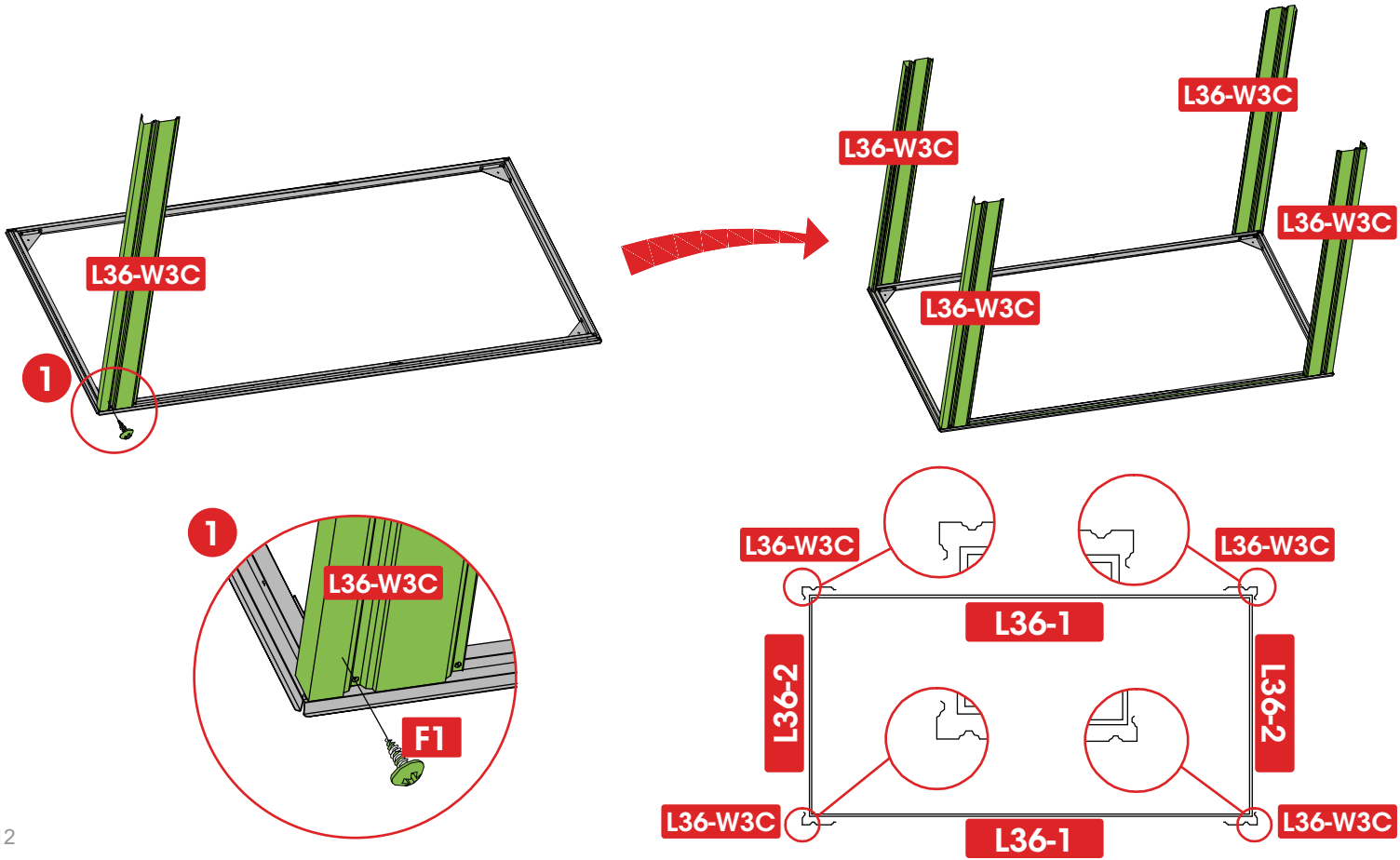

3

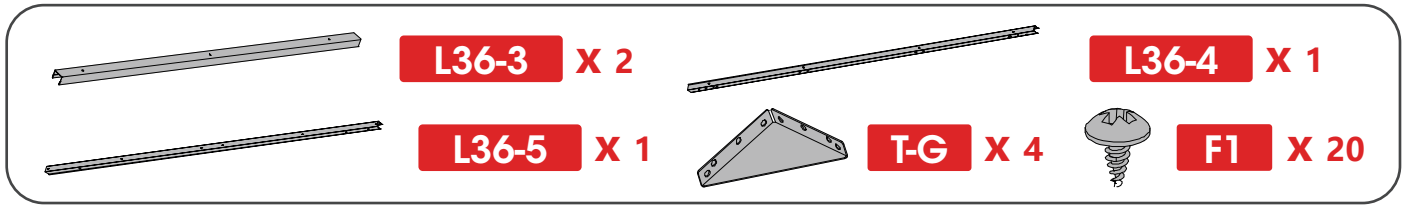
L36-3 X 2
L36-4 X 1
L36-5 X 1
T-G X 4
F1 X 20

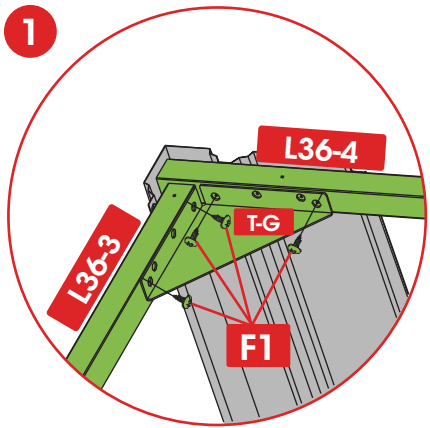
1
L36-4
T-G
L36-3
F1

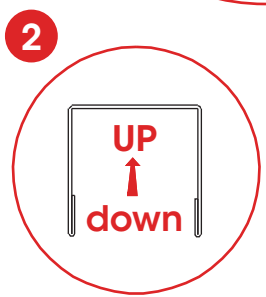
2
UP
down

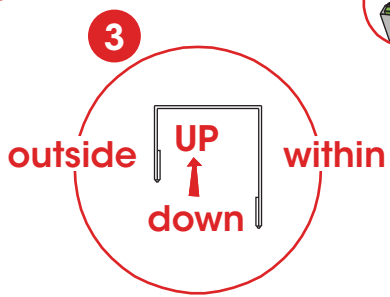
3
outside
UP
down
within

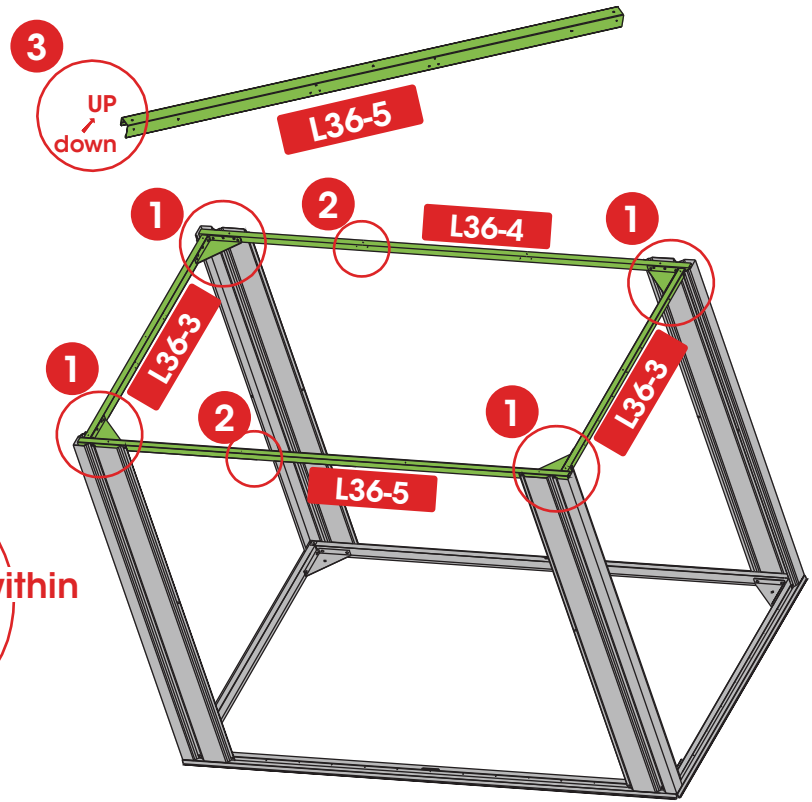
3
UP
down
L36-5
1
2
L36-4
1
1
L36-3
2
1
L36-3
L36-5

4



L36-W5 X 4



F1 X 36



F2 X 6

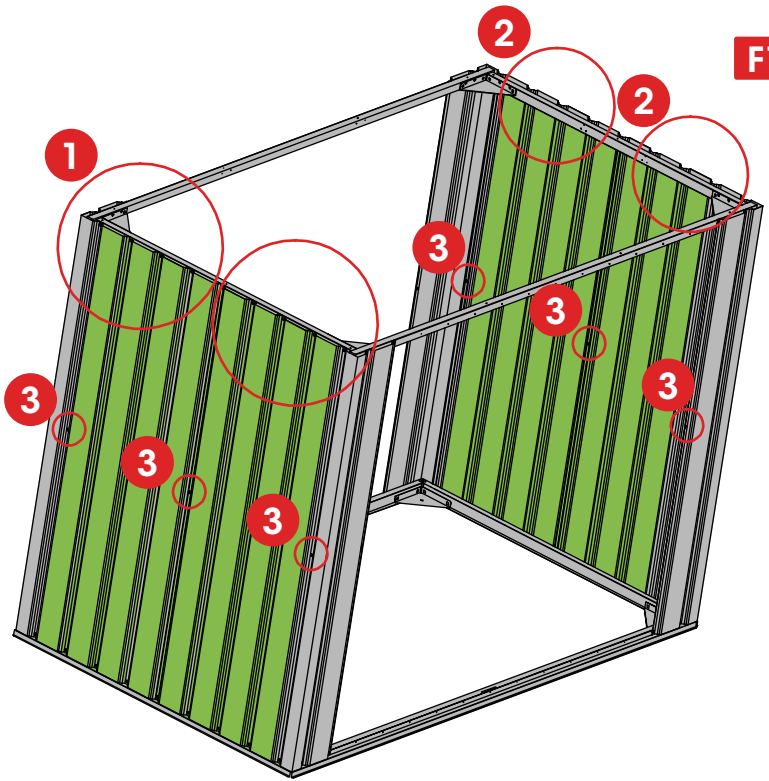

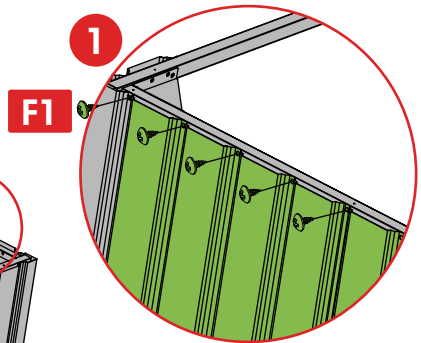

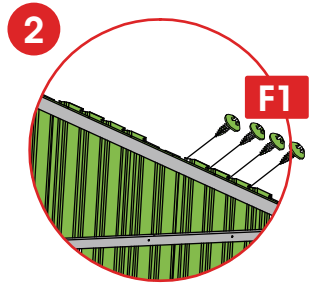

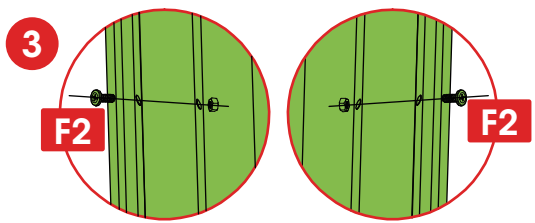

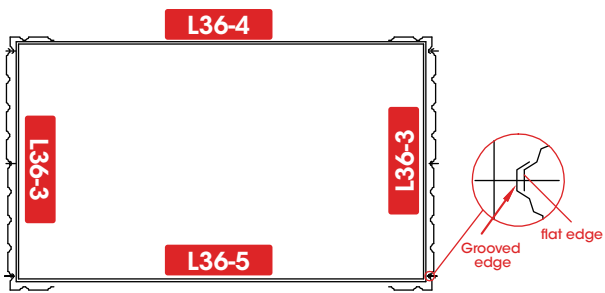

5



L36-W5 X 3



F1 X 26



F2 X 4

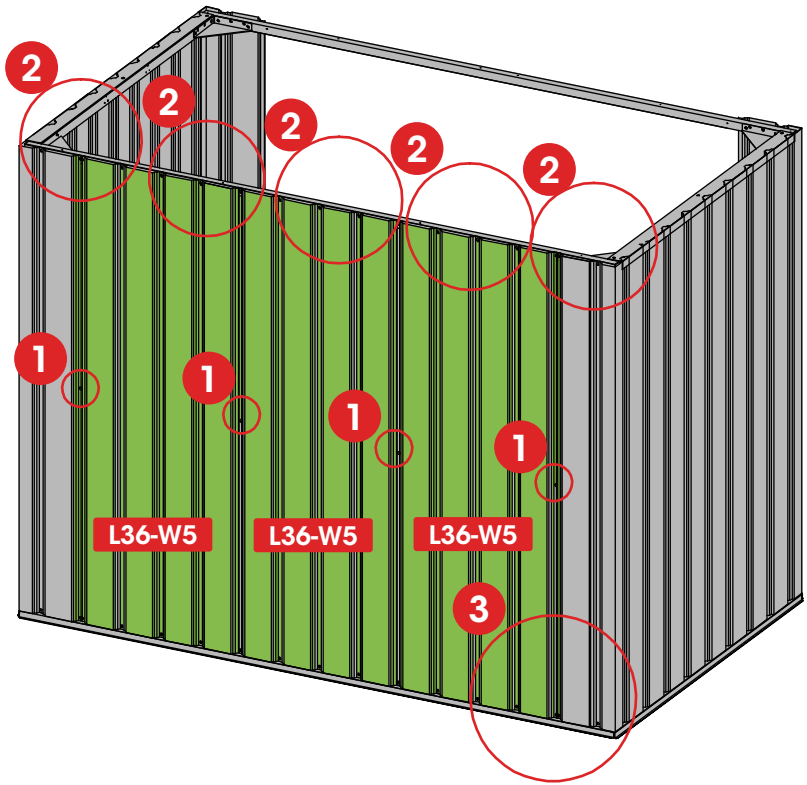

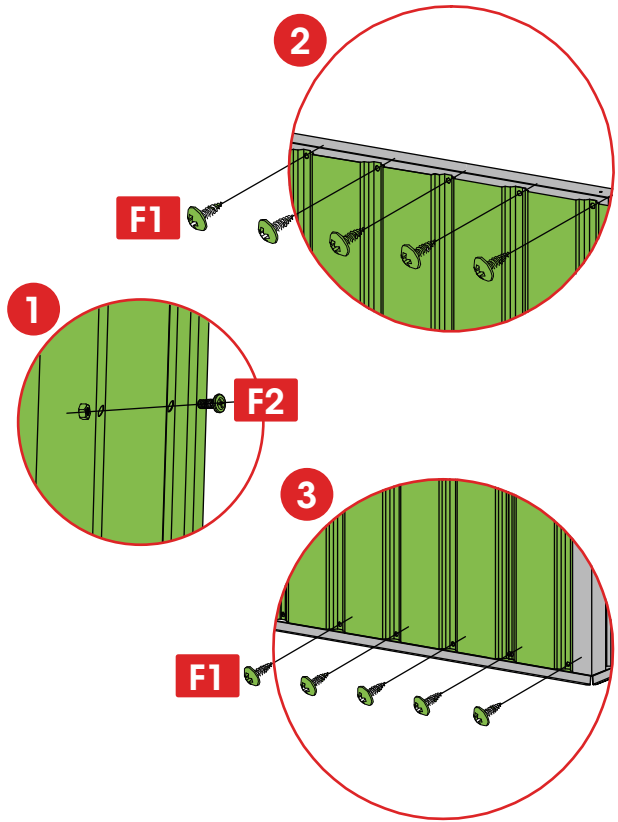

6

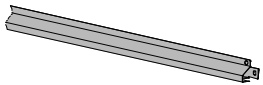

L36-UA X 2



F1 X 8

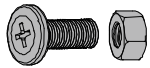

F2 X 2

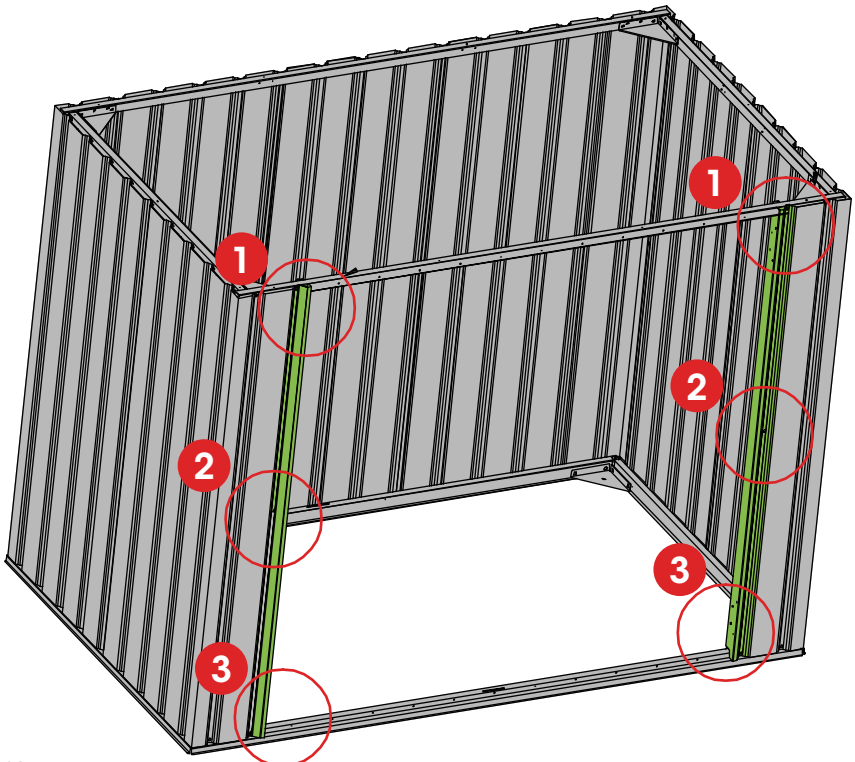

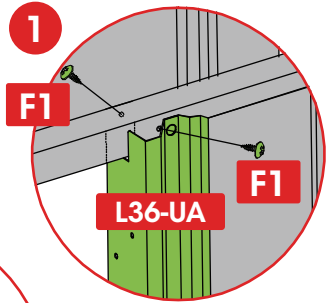

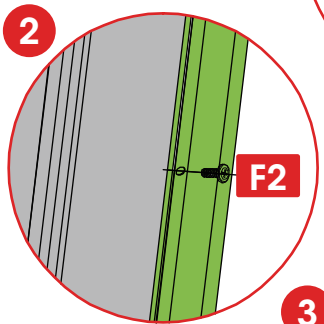

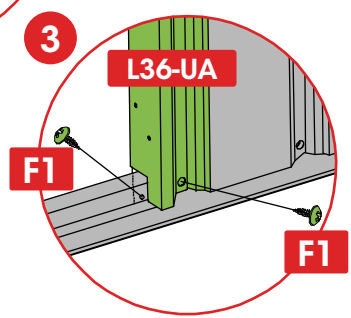

7



L36-6 X 2



L36-7 X 1



F1 X 12

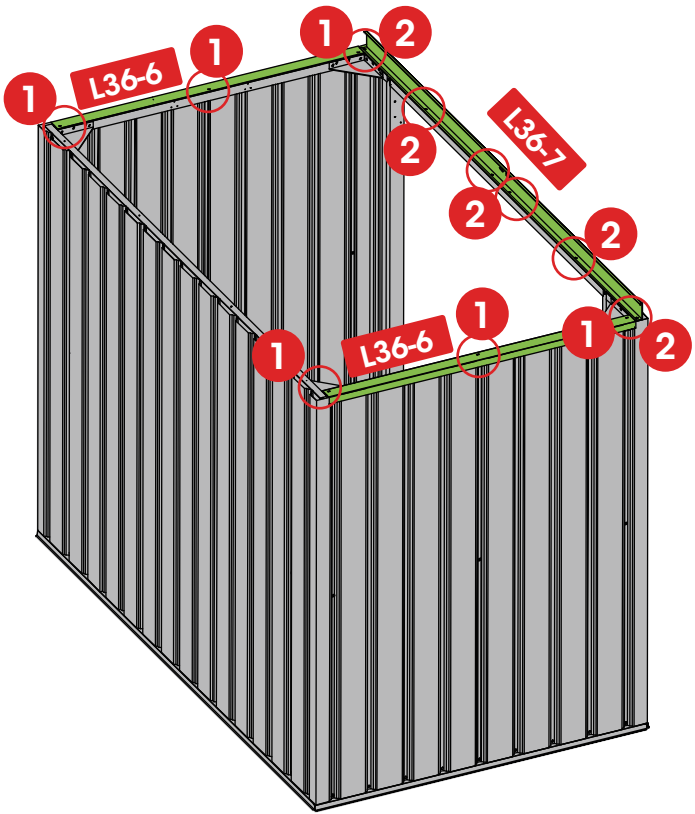

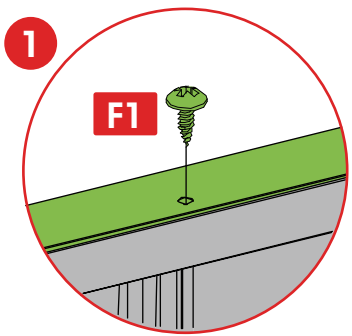

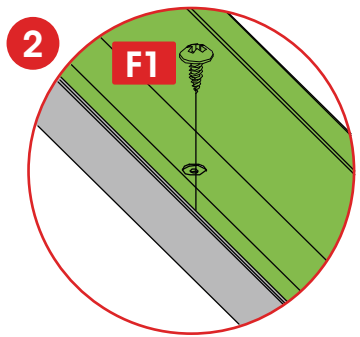

8



F1 X 2



GC X 2

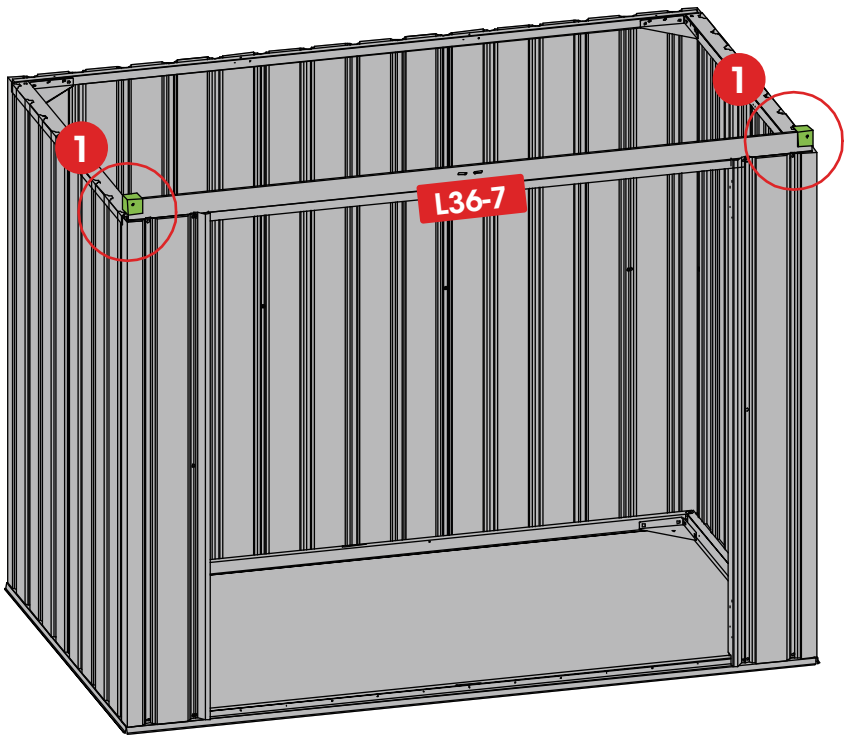

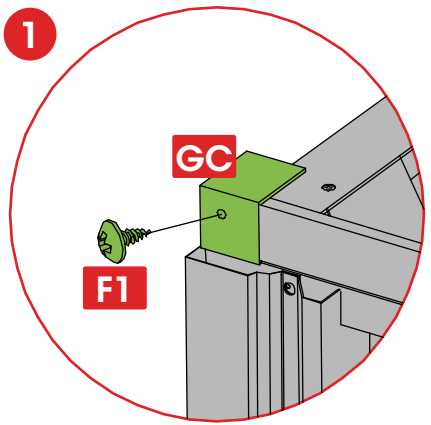

9



L36-12 X 4

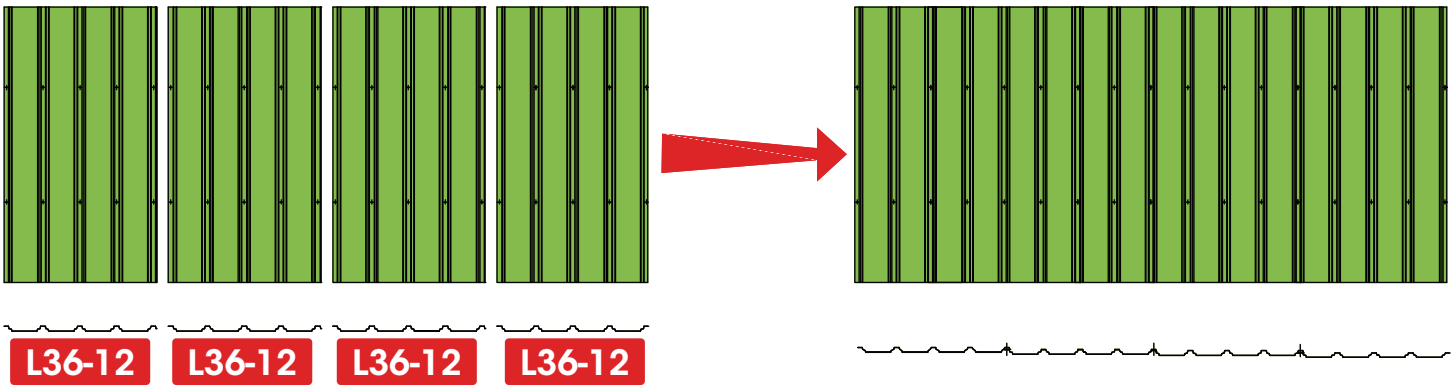

10

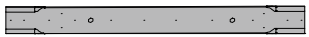

L36-11 X 2

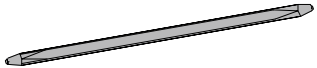

L36-DXA X 2



F1 X 32



V2 X 30

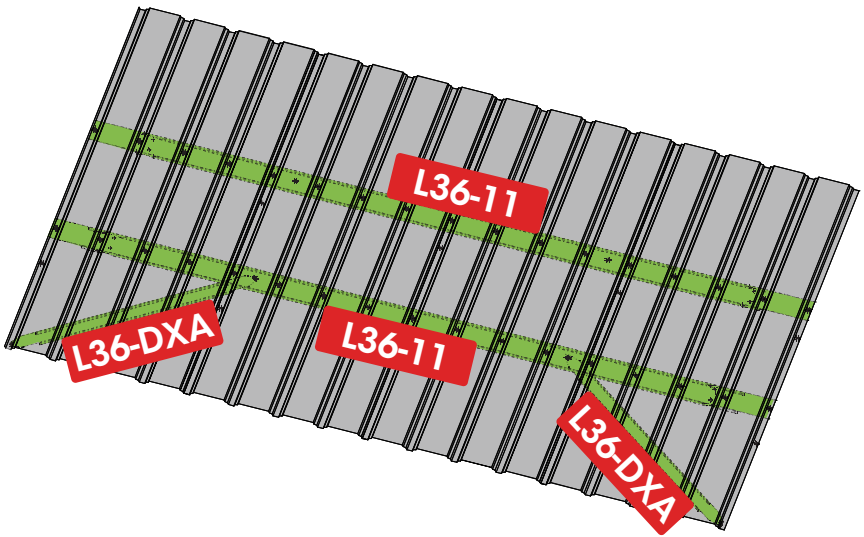

1

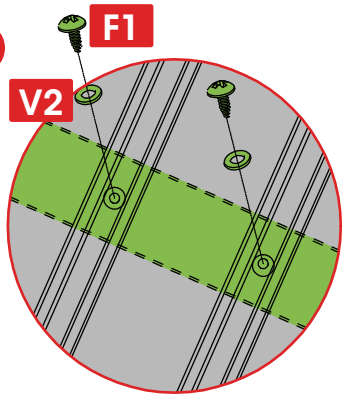

2

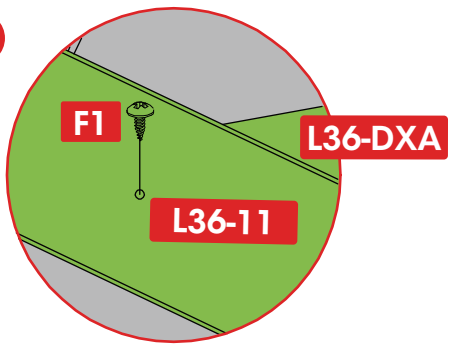

11



L36-8 X 1

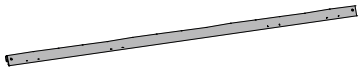

L36-9 X 1



L36-10 X 2



F1 X 12

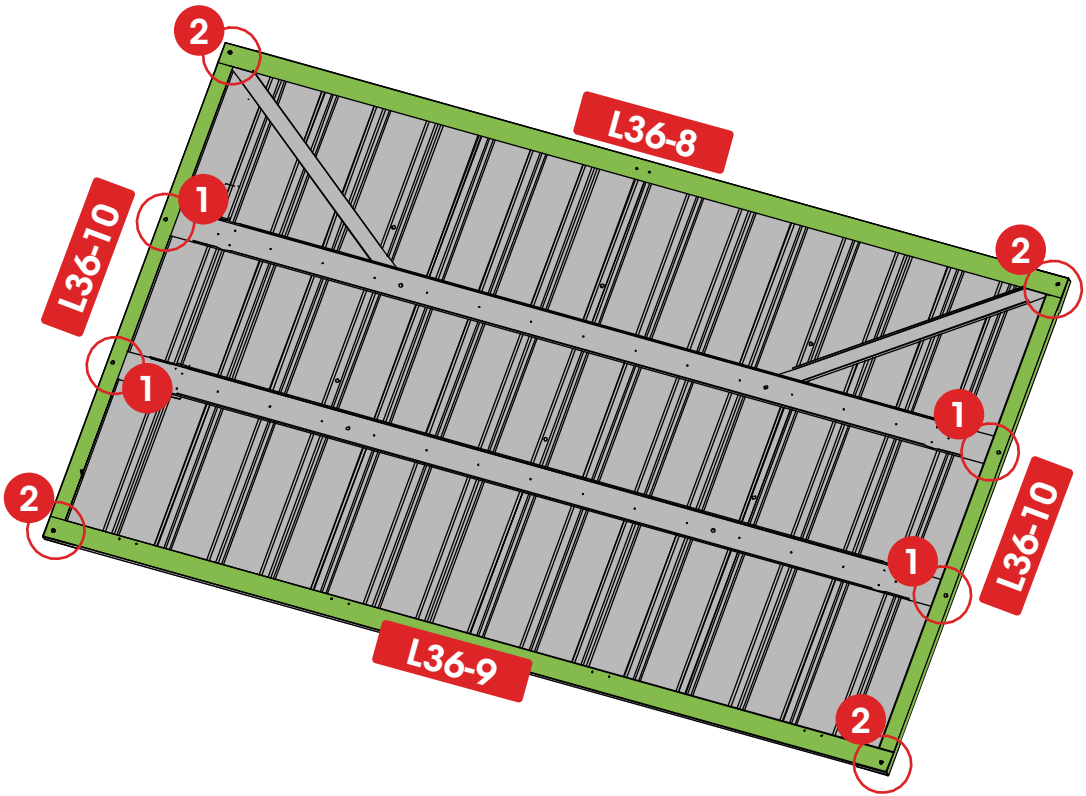

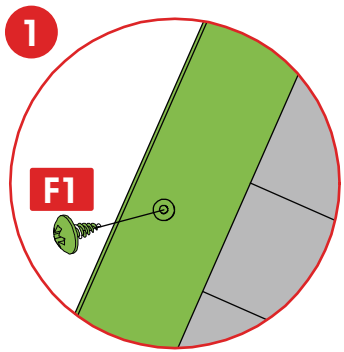

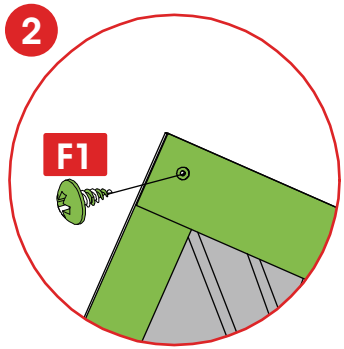

12



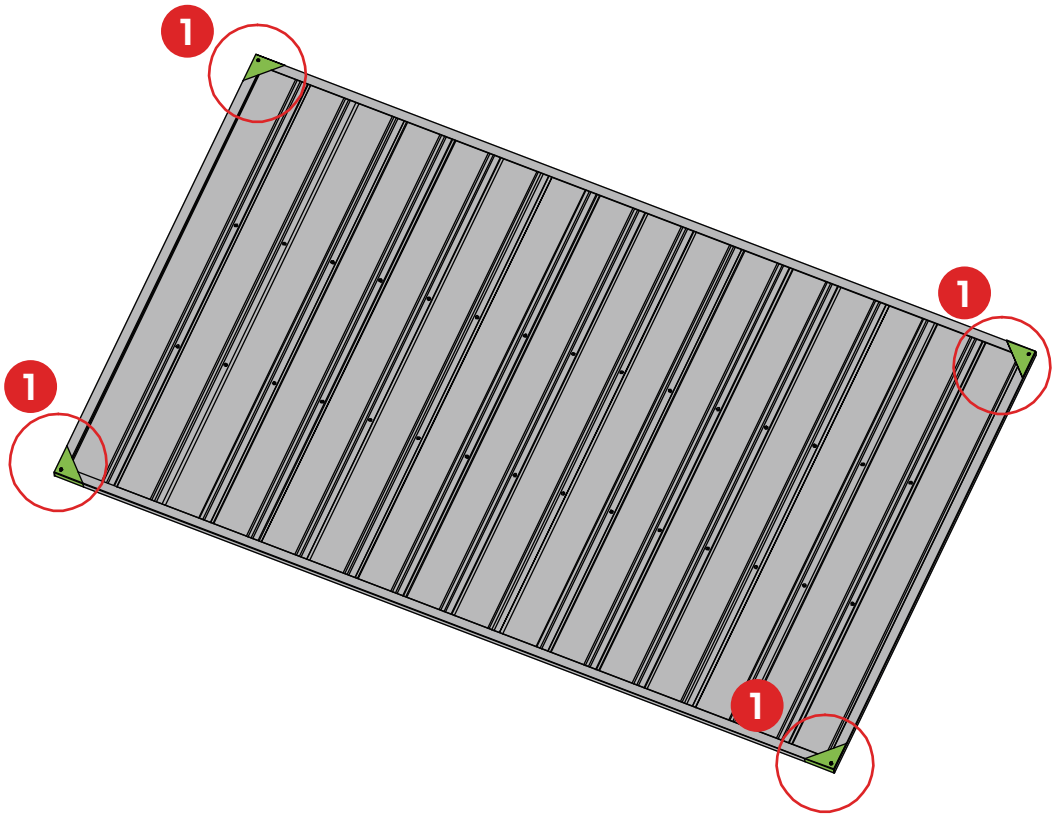

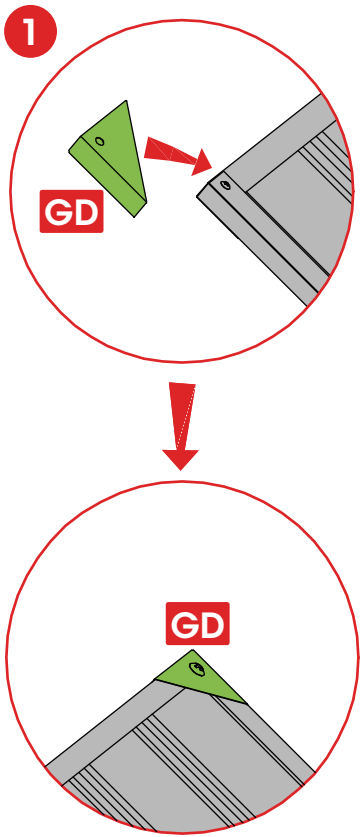

13


GG1 X 2


FF X 2

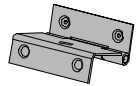
DH2 X 4


F1 X 12

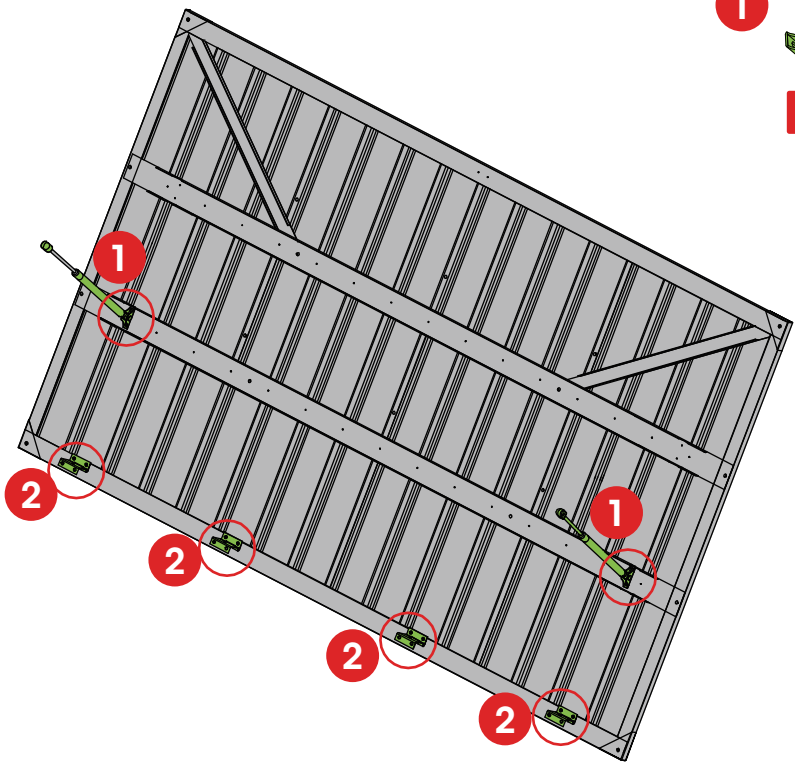

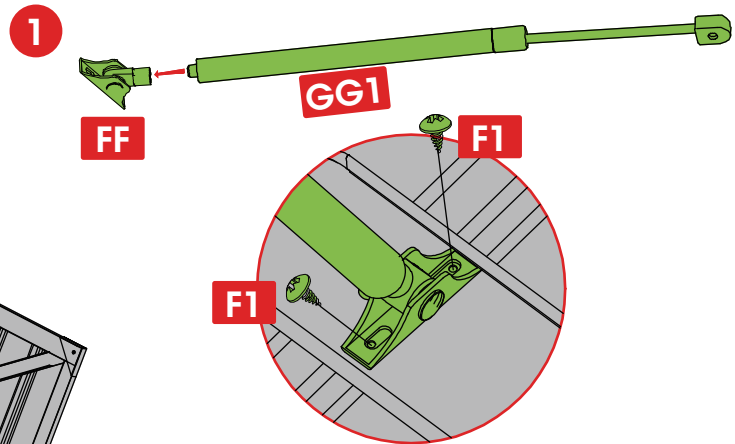

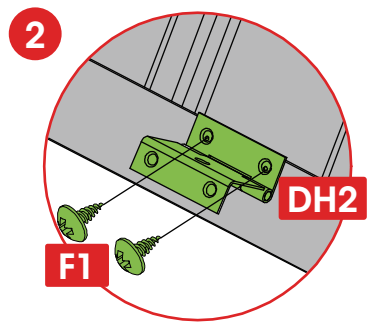

14



F1 X 18



EE X 2

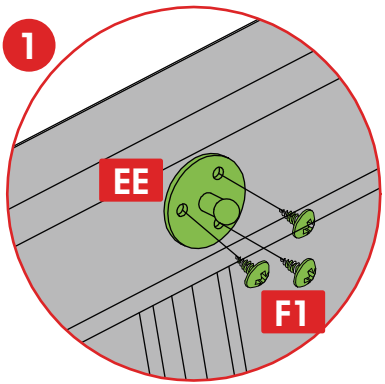

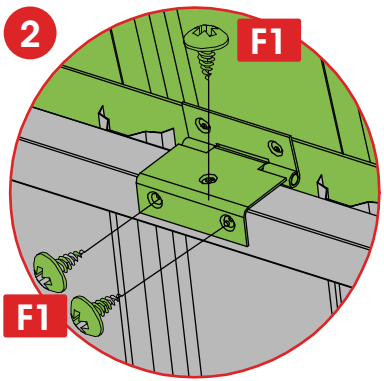

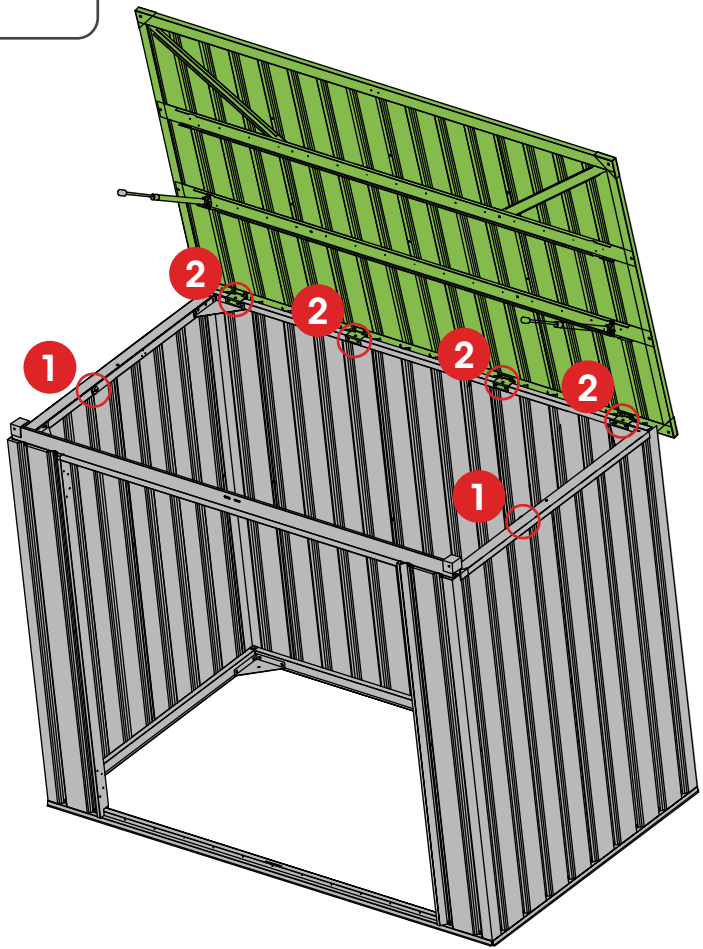

15

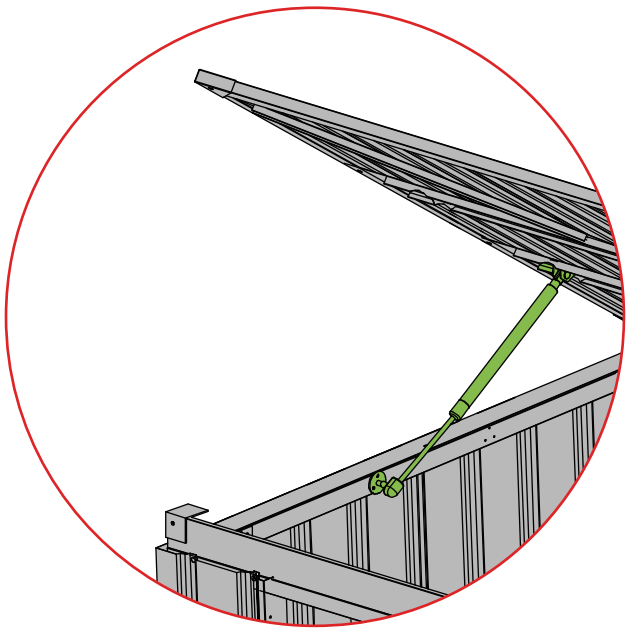

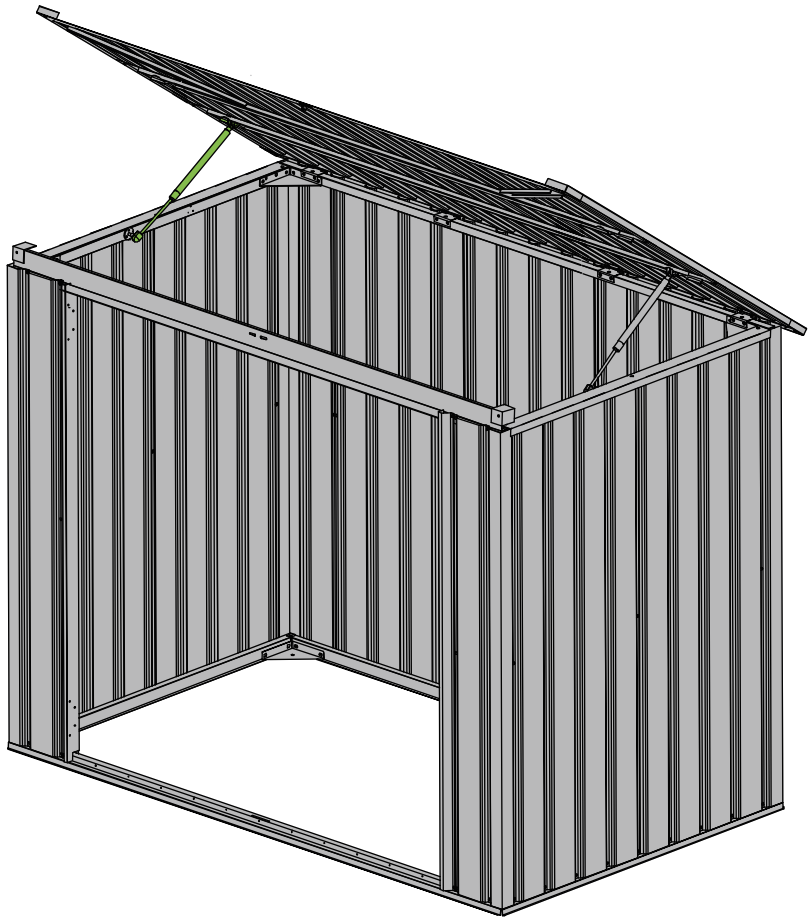

16



L36-W5K X 1



L36-W2HL X 1

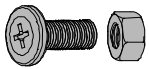

F2 X 2

DL

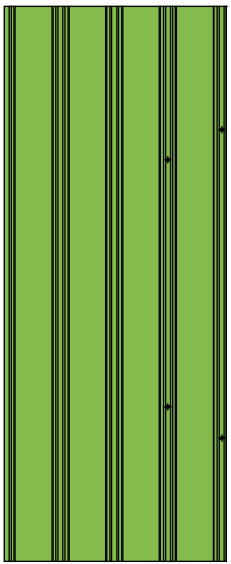

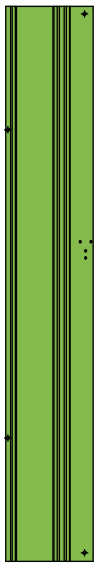

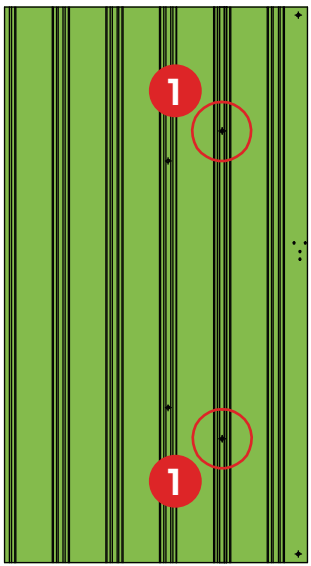

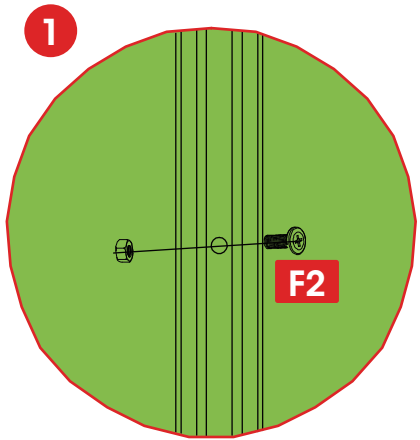



L36-W5K



L36-W2HL

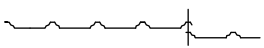

17

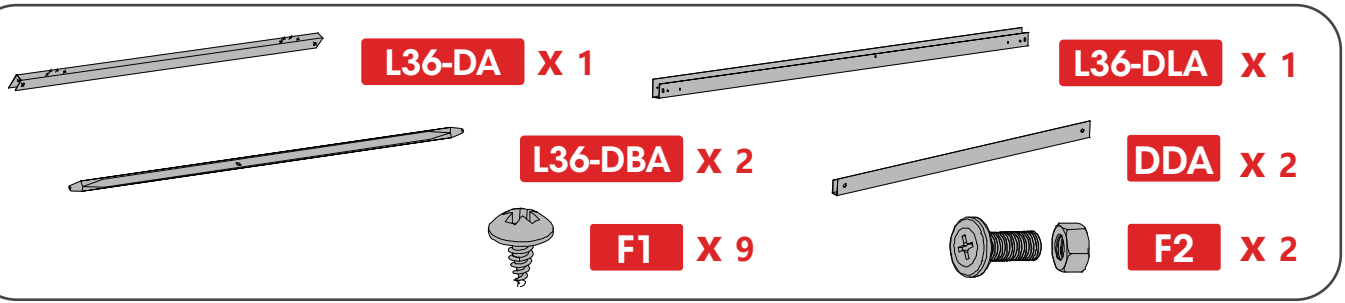
L36-DA X 1
L36-DLA X 1
L36-DBA X 2
DDA X 2
F1 X 9
F2 X 2

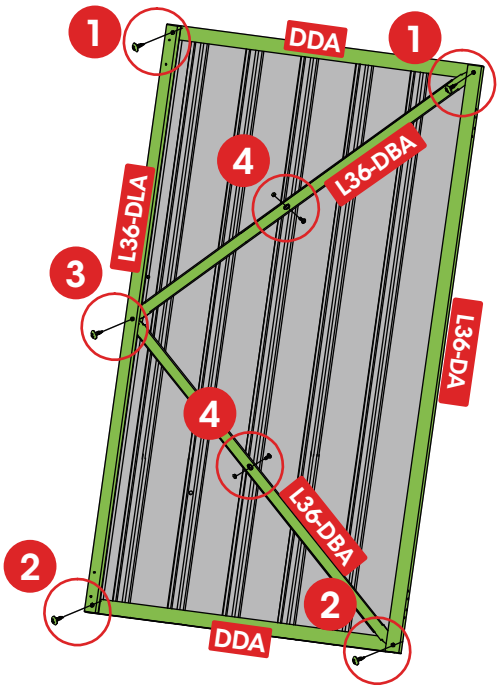
1
DDA
1
4
L36-DBA
L36-DLA
3
L36-DA
4
L36-DBA
2
2
DDA

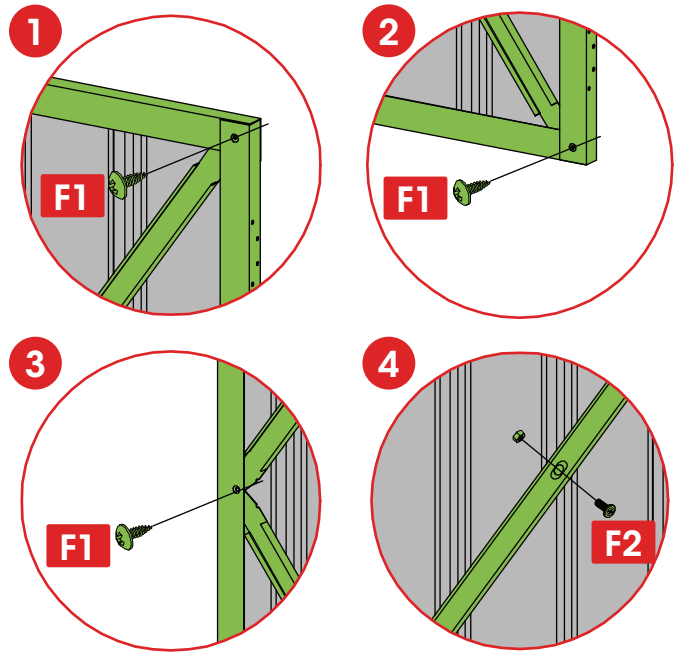
1
F1
2
F1
3
F1
4
F2

18



L36-W5K X 1



L36-W2HR X 1

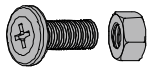

F2 X 2

DR

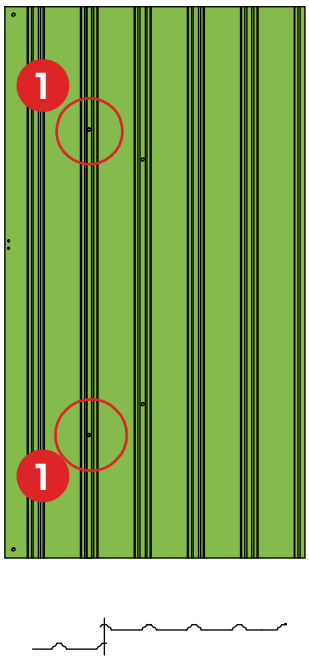

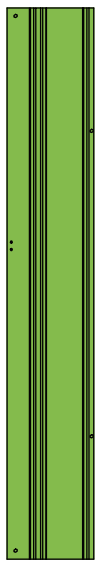

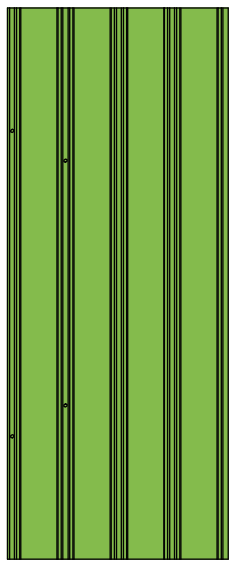

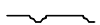



L36-W2HR L36-W5K

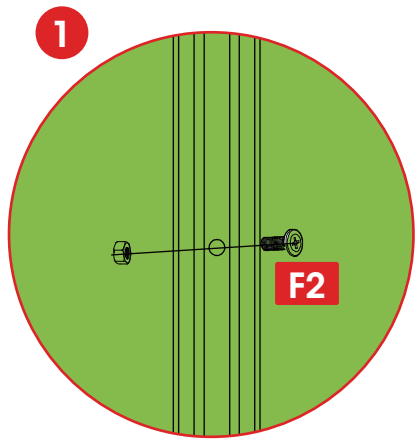

19

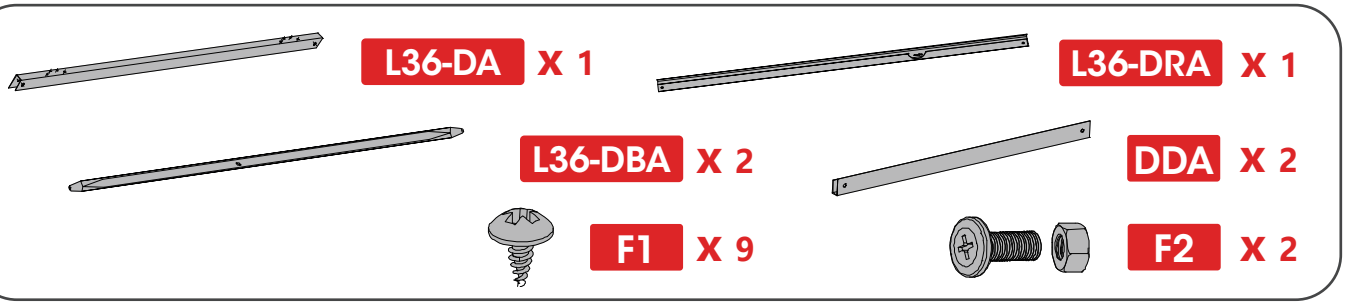
L36-DA X 1
L36-DRA X 1
L36-DBA X 2
DDA X 2
F1 X 9
F2 X 2

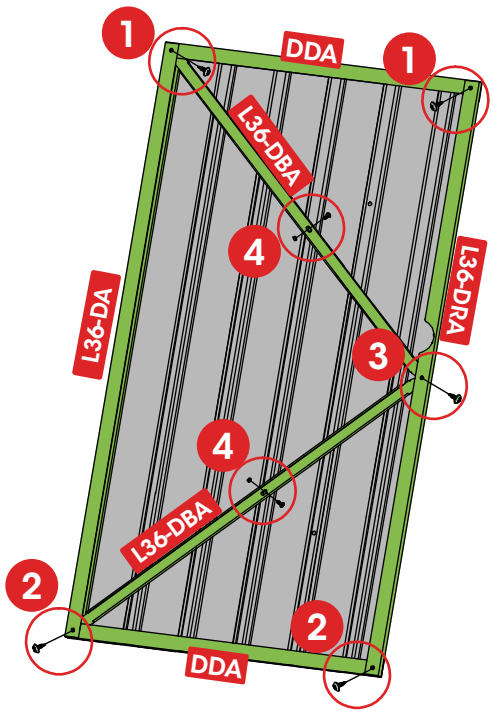
1
DDA
1
L36-DBA
4
L36-DA
L36-DRA
3
4
L36-DBA
2
2
DDA

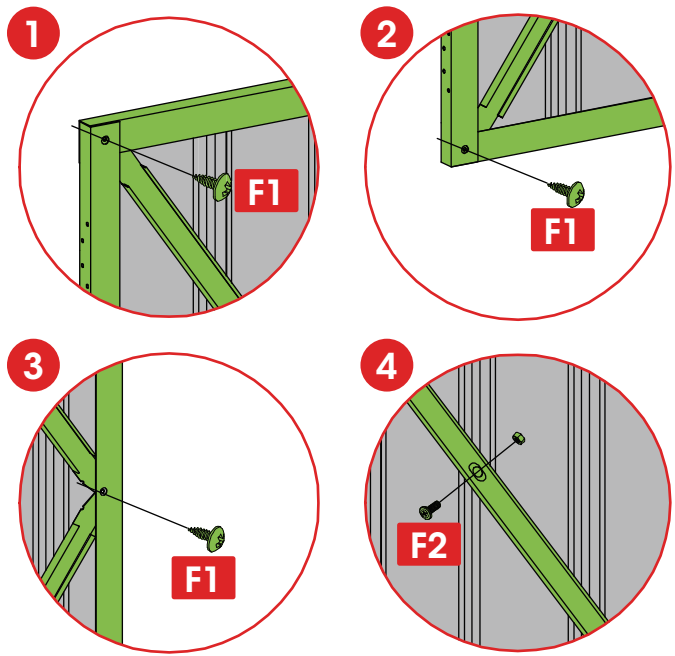
1
F1
2
F1
3
F1
4
F2

20

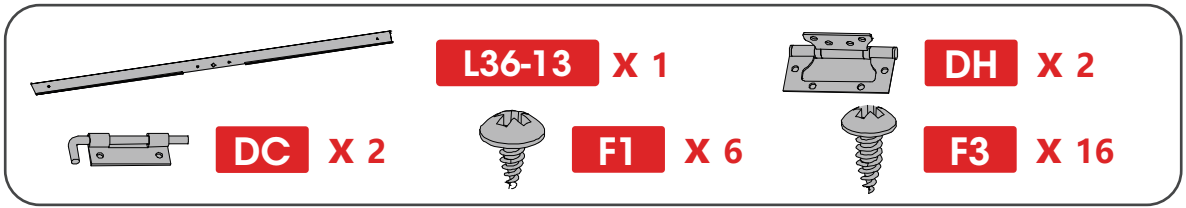
L36-13 X 1
DH X 2
DC X 2
F1 X 6
F3 X 16

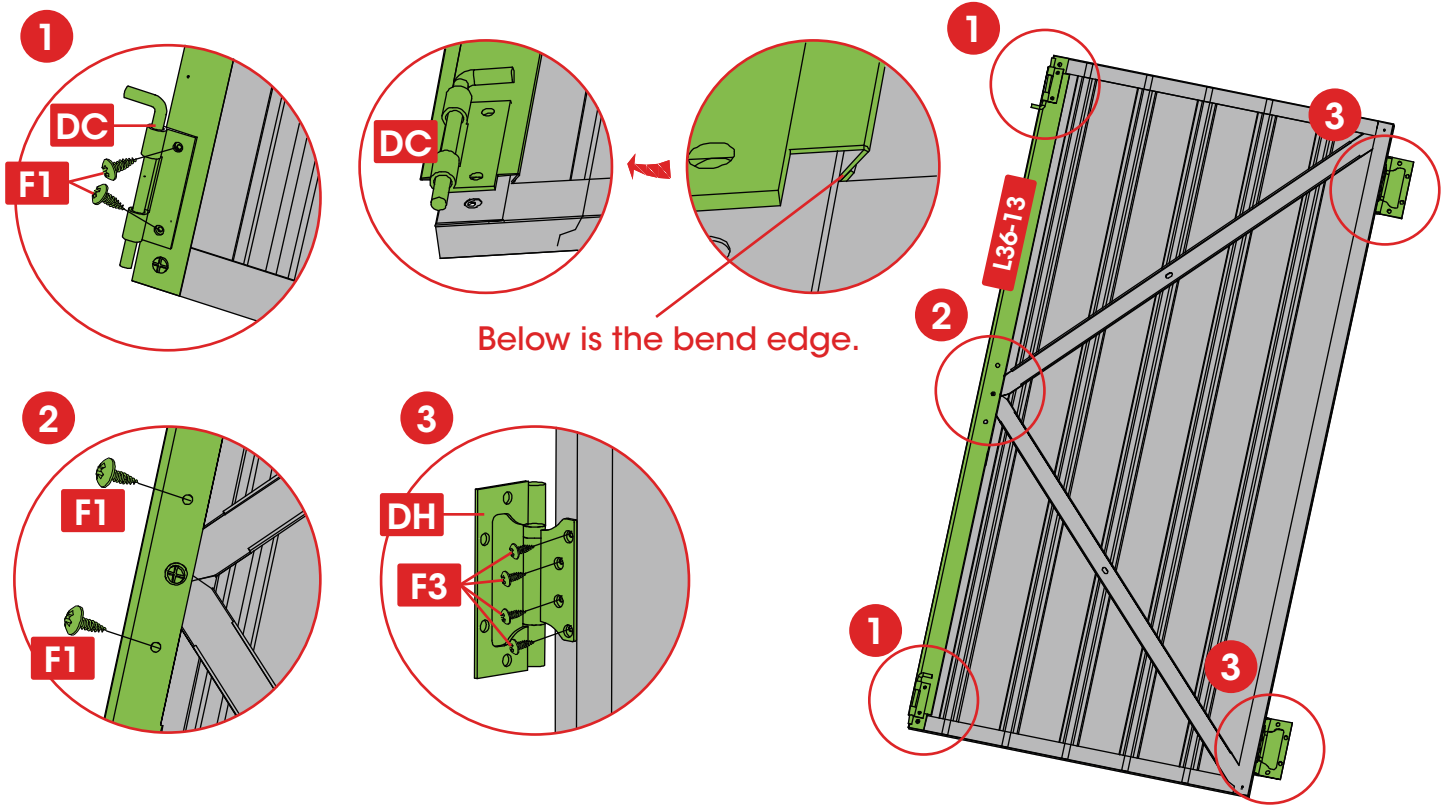
1
DC
F1
DC
Below is the bend edge.
1
3
L36-13
2
2
F1
F1
3
DH
F3
1
3

21

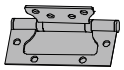

DH X 2

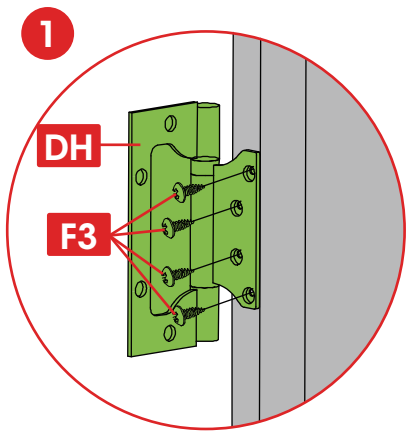

DR

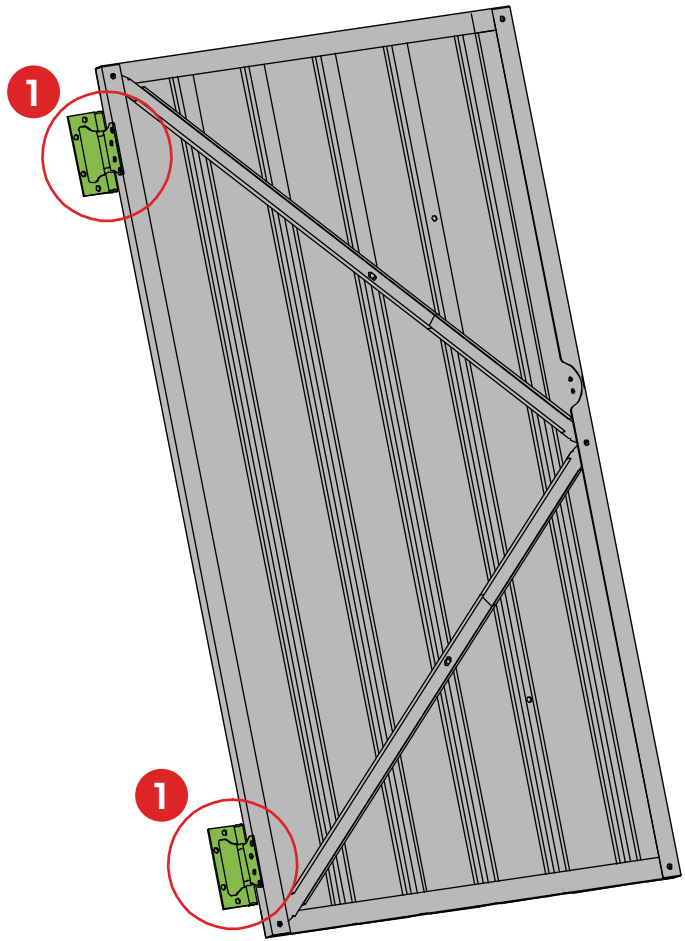

22

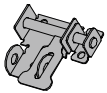

DE X 1



F1 X 4



F2 X 2

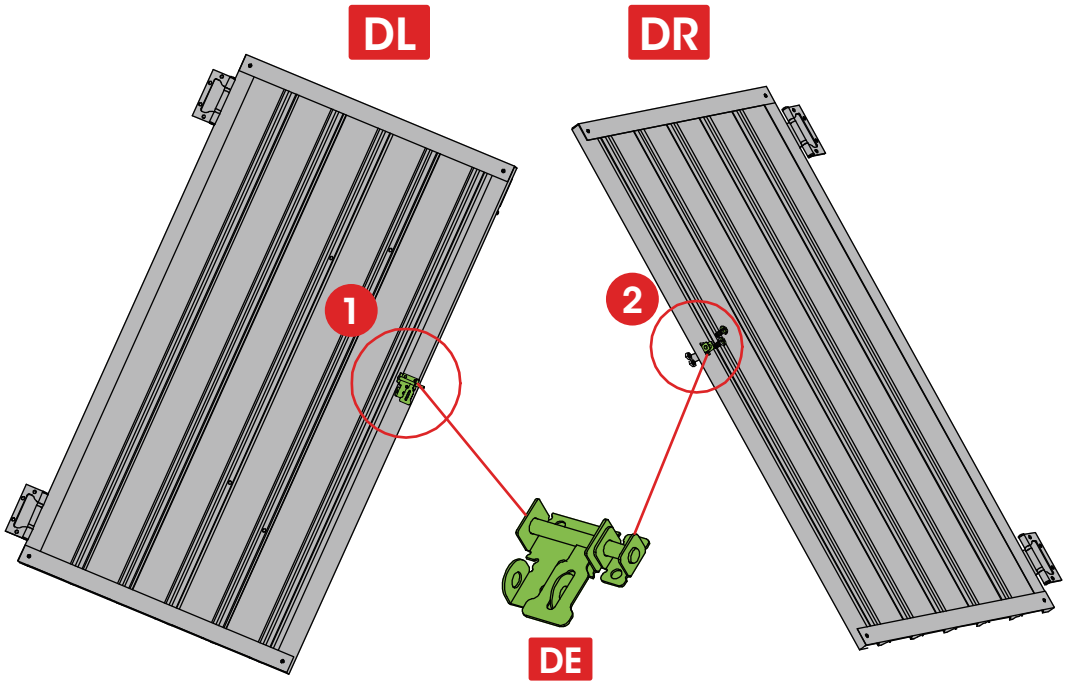

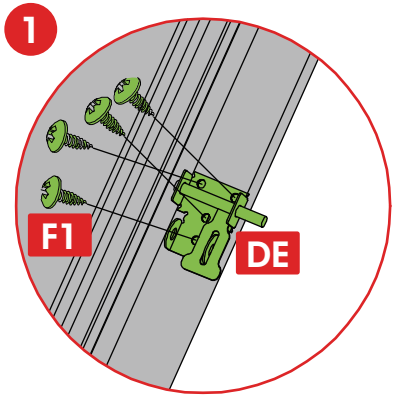

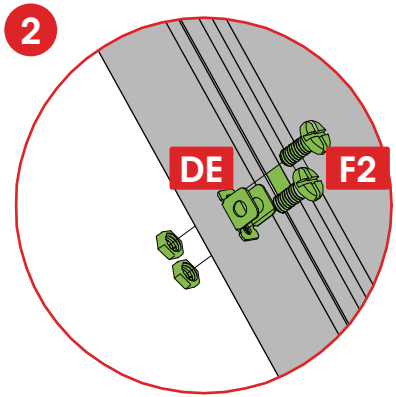

23



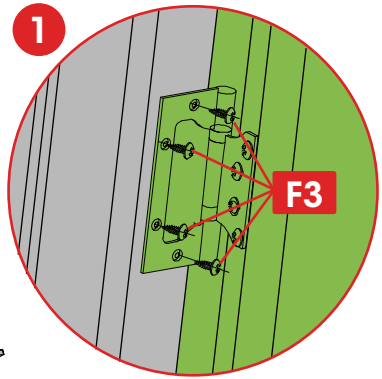

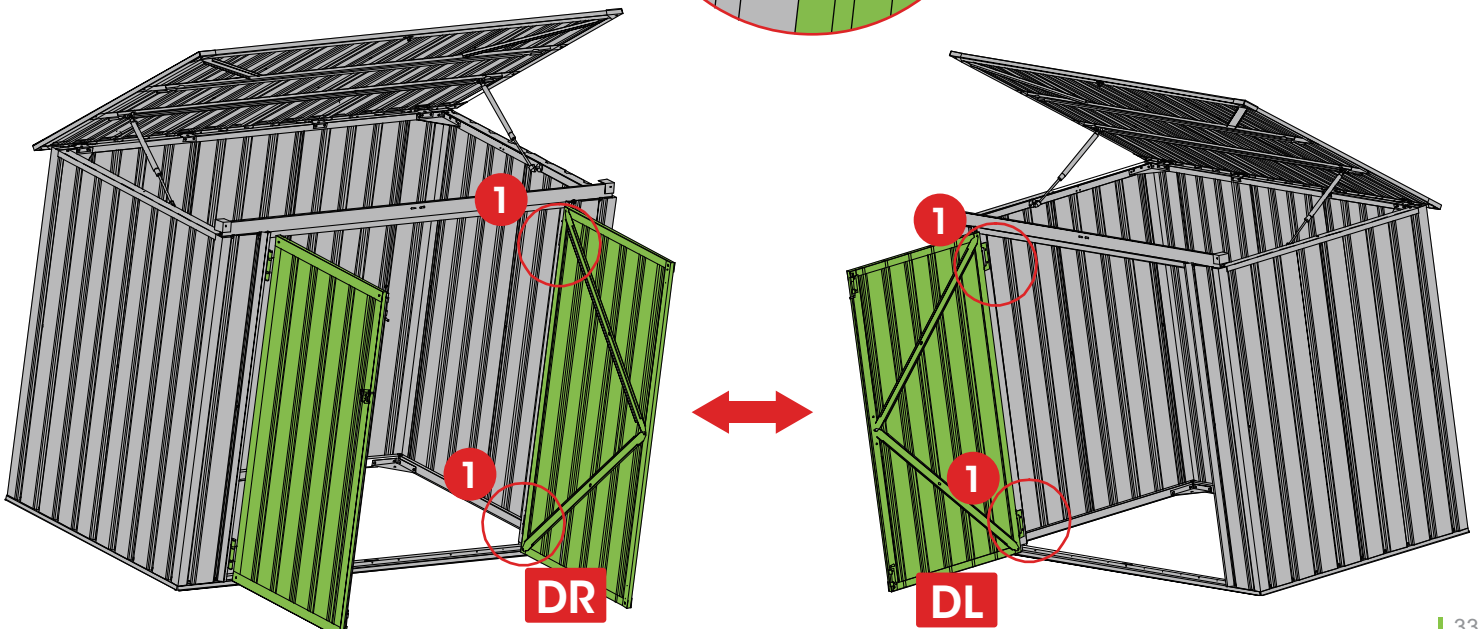

24

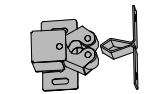

DB X 1



DF X 2



F1 X 2

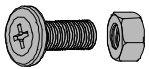

F2 X 2

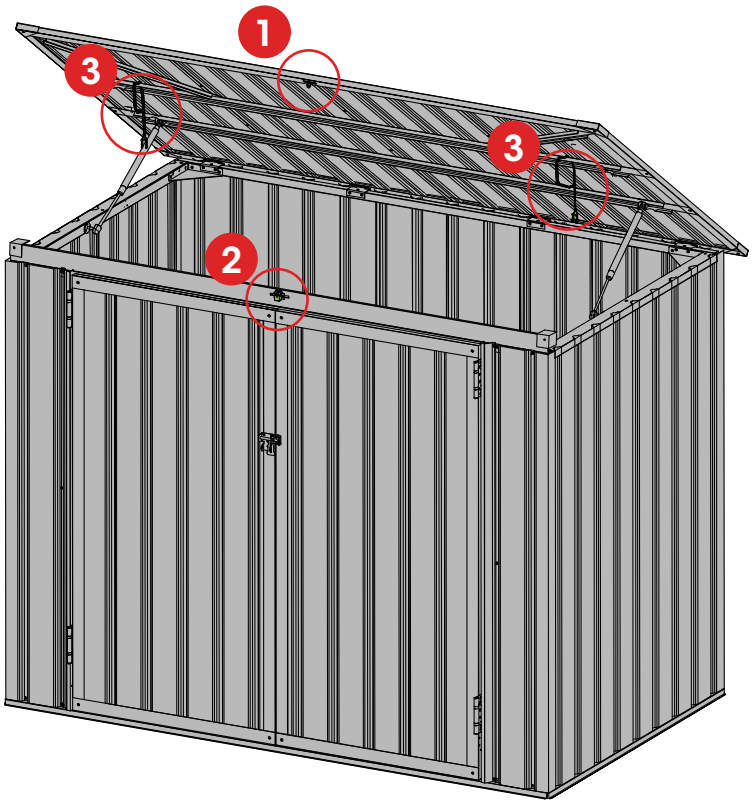

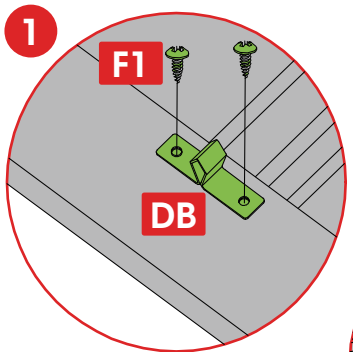

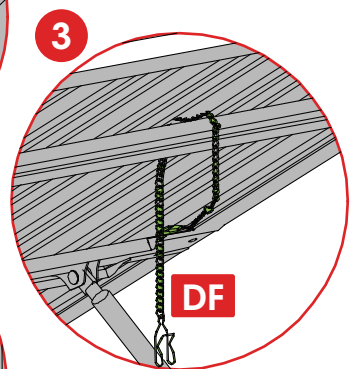

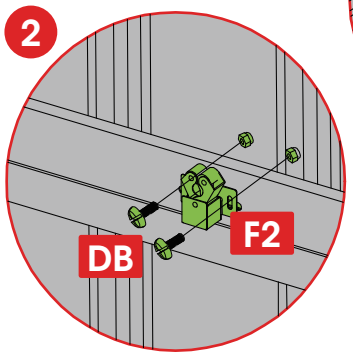

25



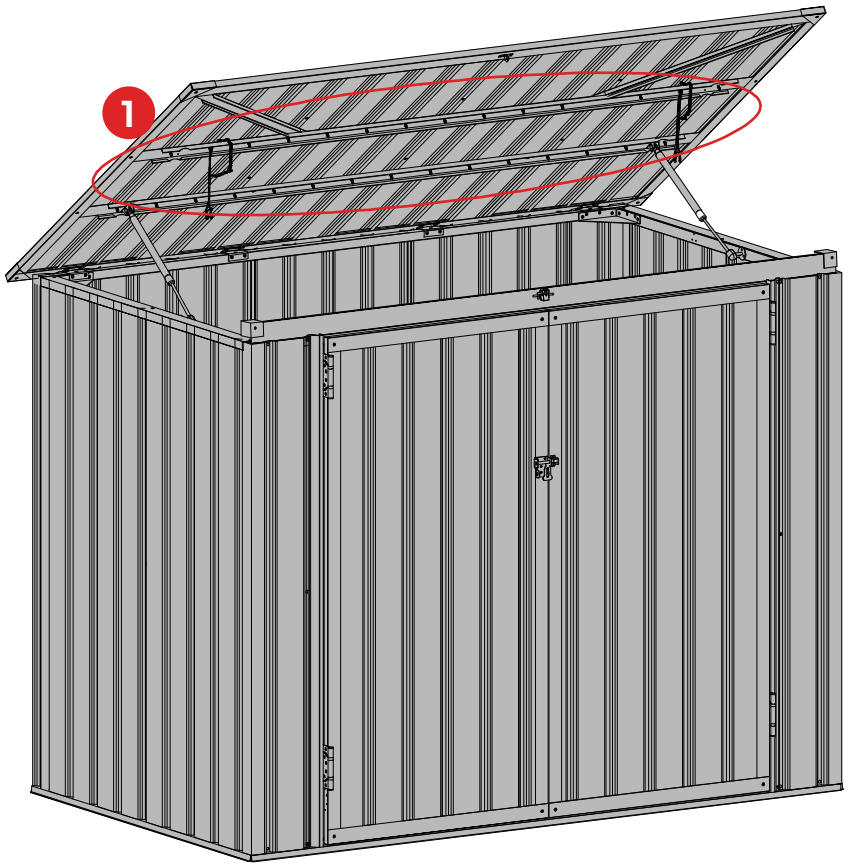

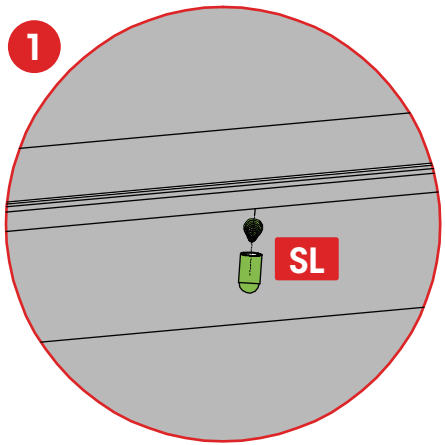

HELP CENTER

Question about your product? We're here to help. Visit us at:



Chat Support


Product Inquiry



Orders FAQ


Product Assembly


Returns & Refunds

We Stands Behind the Quality of Their Furniture

if you have any issues with your item please let us know! We will always do our best to comeup with a solution that you will be happy with.Please get in touch with our customer service team before returning the product.And pls do not throw the original box(es) if you have not finished assembling or confirmedno qualityissues.
Length of return period:
Items can be returned within 30 days of purchase.
In the meanwhile,everything you purchased from us comes with a one-year warranty.
Who is responsible for the return shipping fee:
We will cover the return shipping fees if:
1.Your item has a manufacturing defect in its materials or workmanship.For example, tornwicker or misaligned screw holes.We will send you a prepaid shipping label after photosare sent.
2.Your item has been damaged in transit.For example, glass is broken or wicker is damagedWe will send you a prepaid shipping label after photos are sent.
3.You receive the wrong box(es) due to a warehouse error. We will send you a prepaidshipping label after photos are sent of the wrong SKU numbers on the outer box(es).
4.One or more boxes are lost in transit. We will send vou a prepaid hipping label if you no longer
want the item.
*However, we still hope to work with you for a better solution instead of a return. Please don't hesitate to contact our customer
service team.
Customer will cover the return shipping fees if:
1 .You don't like the product(s) after receiving the box(es).
2.You no longer need the product(s) but you have received the box(es).
3.You buy the product(s) by mistake but you have received the box(es).
4.Order/Shipment cancellation failed and you have received the box(es).

Return Request

in order to get a full refund as described in this return policy, all items must be: (1) In a brandnew/unused condition, please provide photos before and after packaging.
(2) When returning, all accessories and parts are firmly packed in all original packaging.
if your return does not meet the requirements, you may not get a full refund.
When will I be refunded?
The refund is released once the goods have been returned to our warehouse.
What if the product is damaged/defective outside of the valid return period?
We want you to be a happy customer. Please reach out to us by email and we will come upwith a solution to make sure you are satisfied.