GLACIER BAY®

1015196547 / 1015196554
25066-VS20-PDV / 25066-VS20-PCA

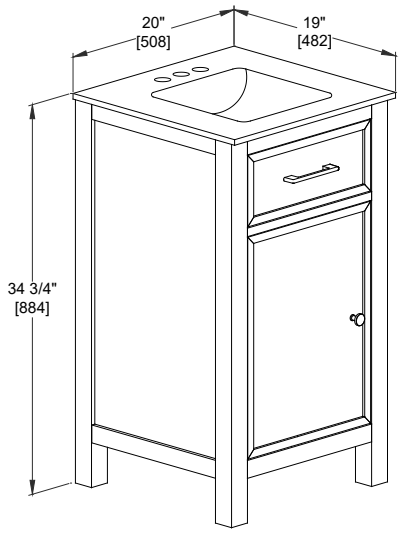


## Product Diagrams

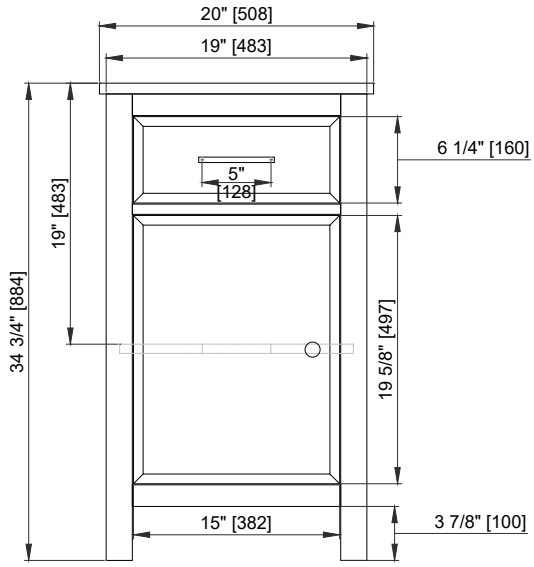


Front

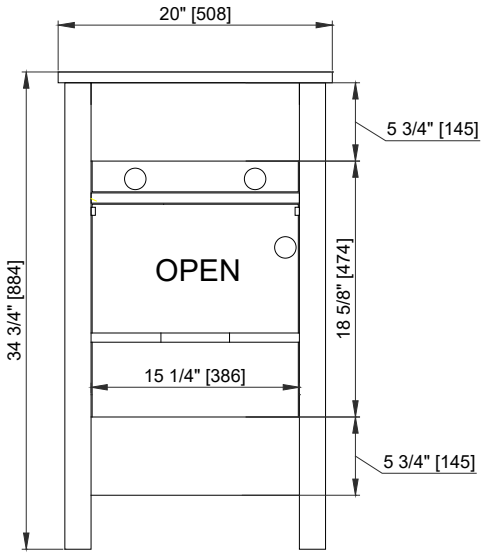


Back

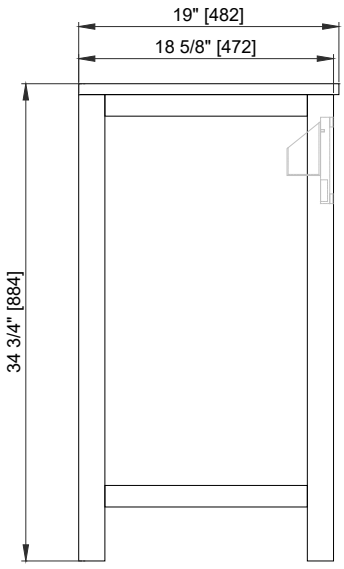


Side

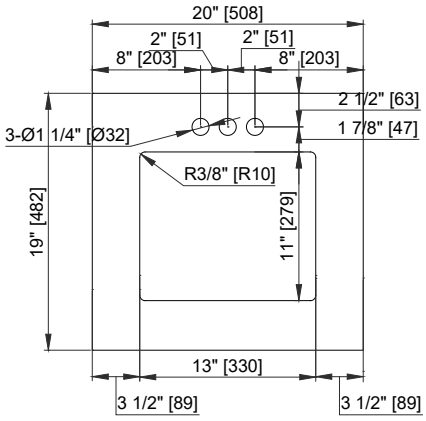


Top