PRODUCT SPECIFICATIONS

4in LED Lumen and Color Selectable Downlight

Commercial Electric™

53802101
SKU# 1002948976

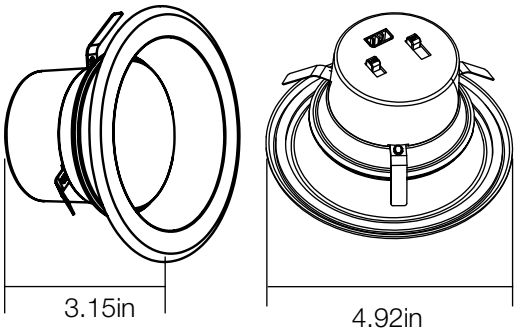

ADVANTAGES

- **30** Configurations in One Fixture!
  (15) with White Baffle and (15) with Black Baffle
- **Five** White Color Temperatures:
  Warm White (2700K), Soft White (3000K), Neutral White (3500K), Bright White (4000K), Daylight (5000K)
- **Three** Brightness Levels:

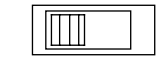

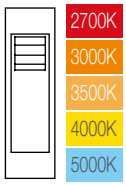

- **Two** Baffles: White and Black
- 65/75/85 Watt Bulb Replacement
- Fits Most 4 in Recessed Housings
- IC Rated
- 5 Year Warranty

DIMMER LIST

Dimmer Brand	Model #
Lutron	DVCL-153PR-WH
	CTCL-153PDH-WH
	TGCL-153PH-WH
	MACL-153MH-WH
	P-PKG1W-WH-R
Leviton	R62-06674-P0W
	R12-06672-1LW
	R50-IPL06-10M
Eaton	SAL06P-W-K

APPLICATIONS

Suitable for Wet Locations: Exterior Applications & Showers

SPECIFICATIONS

Model Number	53802101
SKU	1002948976
OSMID	303974238
Power	15 W/ 12 W/ 9W
AC Voltage, Frequency	120V, 60 Hz
Color Temp (nom.)	2700K/ 3000K/ 3500K/ 4000K/ 5000K
Operation Temp	-13°F ~ 113°F
CRI	90
Lumen Output (min.)	1000 lm/ 800 lm/ 600 lm
Dimming	YES
Lifetime Rating	L70/50000Hrs
Efficacy	66.67 lm/watt

PACKAGING

Weight (±0.5 lb)	0.48 lbs
Size (L x W x H) (±0.1 in)	4.92in x 4.92in x 3.15in
Box Dimensions	5.71in x 5.71in x 3.58in
Gross Weight	0.74 lbs
UPC	849489003351

RoHS Compliant · ETL CLASSIFIED Intertek · FC · AIR-TIGHT Certified airtight per ASTM E283-0

INCLUDED IN BOX

- Medium Base (E26) Socket Adapter (1)
- Baffle (Black) (1)
- Baffle Removal Tool (1)

RECESSED MOUNT

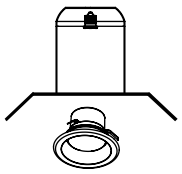

Contact Information 1-877-527-0313 · WWW.HOMEDEPOT.COM