Wall Mounted Range Hoods



INSTALLATION USER MANUAL

support@ rangehoods-saleservice.com / www.vikiokitchen.com

Model Name: RP30 Available Sizes: 30 ” 36 ” 42 ”



INSTALLATION USER MANUAL

support@ rangehoods-saleservice.com / www.vikiokitchen.com

Model Name: RP30 ; RP31 Available Sizes: 30 ” 36 ”



IMPORTANT:
TEST BEFORE INSTALLATION!

- Conduct a power and basic function test immediately after unpacking and BEFORE installation.
- This step verifies the device arrived undamaged during shipping.
- **PLEASE NOTE:** Please install only after testing, which helps you avoid disassembly costs.

SUPPORT EMAIL:
support@rangehoods-saleservice.com

We guarantee to respond within 24hours on business days.

IMPORTANT SAFETY INSTRUCTIONS

WARNING: Failure to follow the instructions in this manual exactly may result in a fire or explosion, causing property damage, personal injury, or loss of life.

- Before beginning installation, please read and follow these important instructions to ensure the safety of your home and its occupants.
- The instructions in this manual are intended for qualified installers and certified service technicians. Installation and electrical wiring must be completed by qualified professionals per applicable codes and standards.
- DO NOT attempt to install this appliance yourself. Improper installation may result in injury due to the lack of appropriate electrical and technical expertise.
- The installer should leave these instructions with the consumer, who should retain them for use by local inspectors and future reference.
- Due to the size and weight of VIKIO range hoods, two-person installation is strongly recommended.
- Handle the range hood, chimney cover, baffle filters, and any parts or accessories with care, as sharp edges may cause injury. Wearing gloves during installation is highly recommended.
- The manufacturer is not responsible for any property damage or personal injury caused by incorrect installation, improper use of the appliance, or failure to follow the listed warnings.
- The manufacturer reserves the right to make changes to its products when deemed necessary and beneficial, without affecting essential safety or operational features.
- This appliance is designed for general ventilating use only. DO NOT use it to exhaust hazardous or explosive materials or vapors.
- The operation of this unit may affect the airflow required for the safe operation of fuel-burning equipment. Follow heating equipment guidelines and safety standards such as those published by the National Fire Protection Association (NFPA), American Society of Heating, Refrigerating and Air-Conditioning Engineers (ASHRAE), and local codes and authorities.
- Ensure sufficient airflow for proper combustion and exhaust of gases through the ductwork to prevent back-drafting.
- Before servicing or cleaning the unit, fully disconnect it from the power source to avoid the risk of electric shock and injury.

IMPORTANT SAFETY INSTRUCTIONS

- Ducted range hoods MUST ALWAYS be vented to the outdoors, or in some cases, converted for air recirculation.
- Some existing installations may already have an external damper at the home's exhaust point. In such cases, the damper in your hood ’ s transition piece must be removed, as having two dampers can interfere with airflow and reduce the hood's performance.
- Consult an HVAC or installation professional to ensure compliance with local regulations and proper ventilation.
- When cutting or drilling into walls or ceilings, take care not to damage electrical wiring or other hidden utilities.
- All electrical wiring must be properly installed, insulated, and grounded. VIKIO range hoods come with a grounded 3-prong plug that must be connected to a dedicated 15-amp circuit. Tampering with the plug or cutting the electrical cord will void your warranty.
- Electrical installations must comply with the National Electrical Code ANSI/NFPA 70 (latest edition) and/or local codes.
- Old ductwork should be cleaned or replaced, if necessary, to avoid grease buildup or fire hazards. Check all duct joints to ensure they are properly connected and sealed.
- When a range hood ventilates air out of the room, that air must be replaced — this is known as makeup air. Without a makeup air system (if required), the hood may not operate effectively due to negative air pressure.
- VIKIO does not currently supply makeup air units. Always consult local building codes regarding minimum and maximum airflow requirements. Some states may require additional components, such as makeup air systems, for high-CFM range hoods.
- Keep the motor, fans, baffle channels, filters, tunnels, grease cups, and all grease-laden surfaces clean. Grease buildup inside or on the range hood should be avoided by cleaning these areas regularly.
- Be cautious when cleaning the range hood with spray products: never spray water or cleaners directly onto electrical wiring, the motor, the control panel, or light bulbs.
- After installation, use a stainless steel cleaner or cloth to remove any residue left by the protective film.

TABLE OF CONTENTS

Electrical Requirements.....2
Venting Requirements.....3
Calculating Vent System Length, Specifcations.....4
Required Tools.....5
Parts Supplied.....5
Dimensions.....6
Preparation.....7
Do's and Don'ts for Duct Venting.....7
Rough-in.....8
Installation.....9
Charcoal Filters.....12
Filters.....13
Venting Methods.....14
Range Hood Operations (Digital Panel).....15
Explosion Diagram.....16
Troubleshooting.....17
Maintenance.....18
Control Panel Replacement & Wiring Diagram.....19
Circuit Board Replacement.....20
Bulb Replacement.....21
Grease Replacement.....22
Warranty.....23
Disclaimer & Contact Us.....24
FAQ.....25

ELECTRICAL REQUIREMENTS

IMPORTANT: Observe all governing codes and ordinances.

It is the customer's responsibility:

- To contact a qualified electrician
- To assure that the electrical installation is adequate and in conformance with the National Electrical Code, ANSI/NFPA 70 - latest edition*, or CSA Standards C22. 1-94, Canadian Electrical Code, Part 1 and C22. 2 No. 0-M91 - latest edition** and all local codes and ordinances.

If codes permit and a separate ground wire is used, a qualified electrician should verify that the ground path is adequate. A 120-volt, 60 Hz, AC-only fused electrical supply is required on a dedicated 15-amp circuit.

- DO NOT ground the appliance to a gas pipe.
- If you are unsure whether the range hood is properly grounded, consult a qualified electrician.
- DO NOT place a fuse in the neutral or ground circuit.

IMPORTANT: Save this Installation Guide for electrical inspector's use.

The range hood must be connected with copper wire/plug only.

The range hood should be connected directly to the fused disconnect switch (or circuit breaker box) using flexible armored cable or non-metallic sheathed copper cable. A U.L.- or C.S.A.-listed strain relief must be installed at each end of the power supply cable.

Wire sizes (copper wire only) and connections must match the appliance's rating as specified on the model/serial rating label. Wire sizes must comply with the National Electrical Code ANSI/NFPA 70 – latest edition*, or CSA Standards C22.1-94, Canadian Electrical Code Part 1, and C22.2 No. 0-M91 – latest edition*, as well as all applicable local codes and ordinances.

- A U.L.- or C.S.A.-listed conduit connector must also be installed at each end of the power supply cable—both at the range hood and at the junction box.

- The duct system must terminate outdoors (through the roof or an exterior side wall).
- DO NOT terminate the duct system in an attic or any enclosed area.
- DO NOT use 4" (10.2 cm) laundry-type wall caps.
- Use metal or aluminum ducting only. Rigid metal or aluminum venting is recommended for best performance.
- DO NOT use plastic ducting.
- Keep the duct clean at all times to maintain proper airflow.
- Before installation, calculate the following figures:
  1. Distance from the floor to the ceiling.
  2. Distance from countertop/stove to range hood (recommend* 24" to 30").
  3. Height of hood and duct cover.

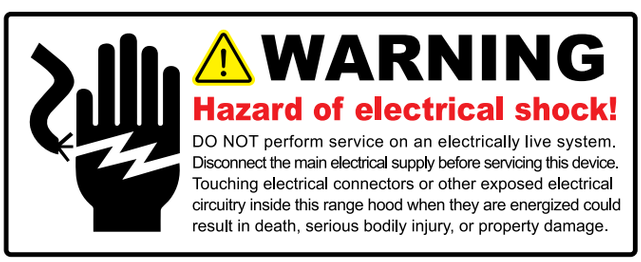

VENTING REQUIREMENTS

For the most efficient & quiet operation:

- A distance of 24" to 30" is recommended* between the stovetop and the bottom of the range hood.
- It is recommended to vent the range hood vertically through the roof using 6" or larger round metal/aluminum ductwork.
- The duct size should be consistent throughout the entire run.
- Use no more than three 90° elbows.
- If using more than one elbow, ensure there is a minimum of 24" (61 cm) of straight duct between elbows.
- **DO NOT** install two elbows directly next to each other.
- Keep the total duct length and number of elbows to a minimum to ensure efficient performance.
- The duct system must include a damper. If the roof or wall cap already has a damper, **DO NOT** use the additional damper (if supplied) on top of the range hood.
- Use aluminum foil tape to seal all joints in the duct system.
- Use caulking to seal around the exterior wall or roof opening near the vent cap.
- Use a 6" round roof or rectangular wall vent cap.

IMPORTANT:

- Use a rectangular-to-circular transition to connect the range hood to the ducting system.
- A minimum 6" round duct (standard for this range hood) must be used to maintain maximum airflow efficiency.
- Always use rigid metal/aluminum ducts, if available, to maximize airflow when connecting to the provided duct.
- Refer to the Duct Run Calculation below to compute the total available duct length when using elbows, transitions, and caps.
- ALWAYS reduce the number of transitions and turns in the duct run whenever possible. If a reducer is required, use a long reducer rather than a pancake reducer.
- Reducing the duct size restricts airflow and reduces efficiency.
- If turns or transitions are necessary, install them as far away from the hood opening as possible and keep a maximum distance between any two turns.
- The minimum mounting height from the stovetop to the bottom of the hood should be no less than 24".
- The maximum mounting height should be no more than 30".
- It is important to install the hood at the correct height. Mounting the hood too low can result in heat damage or fire hazards; mounting it too high may reduce accessibility and overall performance.
- If available, also refer to the stovetop manufacturer ' s clearance requirements and the recommended hood mounting height above the range.

Minimum Duct Size:

- Round - 6" (use Aluminum foil tape to properly seal)

** Due to different ceiling height configurations, the recommended height may not be applicable.*

CALCULATING VENT SYSTEM LENGTH

To calculate the length of the duct system you require, subtract the equivalent feet for each “Duct piece” (Table Below) used in the system from the “Recommended maximum run” (Table Below). The longest duct run that is acceptable (if completely straight) is 50 feet. The number of duct pieces (elbow, transition, etc.) installed in your duct run will determine the maximum length the duct run can be. Please refer to the example below:

Duct Run Calculation:	
Recommended maximum run	
6" round duct	50 ft
Duct piece deduction	
Each 90º elbow used	9 ft
Each 45º elbow used	5 ft
Each round to rectangle transition used	7 ft
Side wall cap with damper	7 ft
Roof cap	7 ft

Duct Run Calcuation example:

One roof cap, two 90º elbows, and one 45º elbow used:

7ft + 9ft + 9ft + 5ft = 30ft used.

The above duct pieces used are equivalent to 30ft of a straight duct run. Subtract 30ft from the allowable 50ft. The remaining distance of 20ft is the longest that the straight ducting (in addition to the vent pieces) can be.

SPECIFICATIONS

Body	Stainless Steel
Power Rating	120V/60Hz (USA & Canada standard)
General Input Power	120W + 6W for LED Lights
Motor Input Power	120W
Motor Revolution	700 RPM (±10%) to 1350 RPM (±10%)
Ampere	1.3 A
Levels Of Speed Control	3 Levels
Air Pressure	150 Pa (200 Pa Maximum)
Noise Level (Q/M/H)	1.0 Sone (40 dB) / 4.0 Sone (55 dB) / 6.5 Sone (60 dB)
Motor Type	Single Motor
Power Connection Type	Plug-in Wire (120V)
Control Type	Digital Display Panel
Filtration Type	Stainless Steel Baffle Filters
Illumination	2 x 3W LED (4000K)
Venting Size	Top 6" Round
Warranty	2 Year Parts Warranty

REQUIRED TOOLS

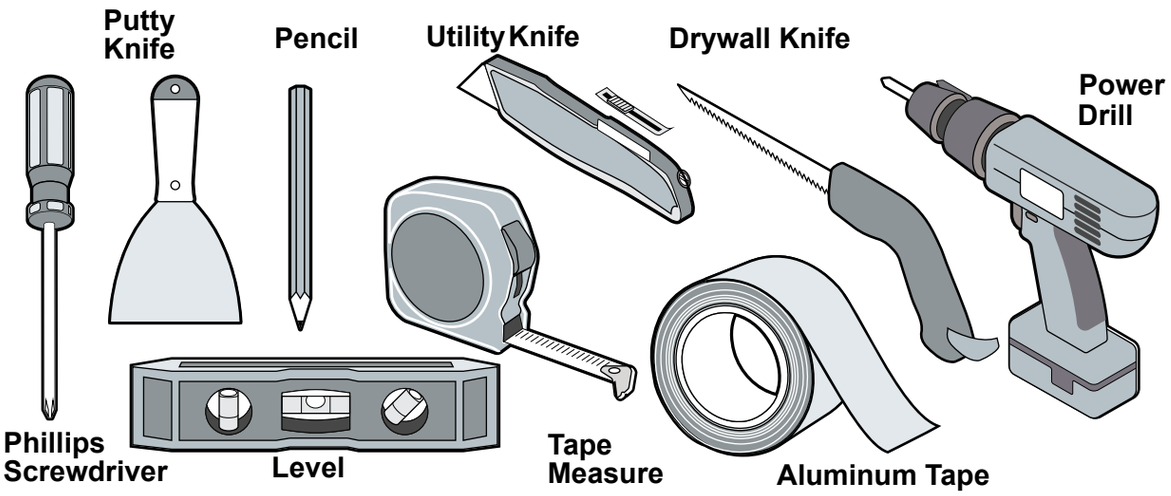

PARTS SUPPLIED

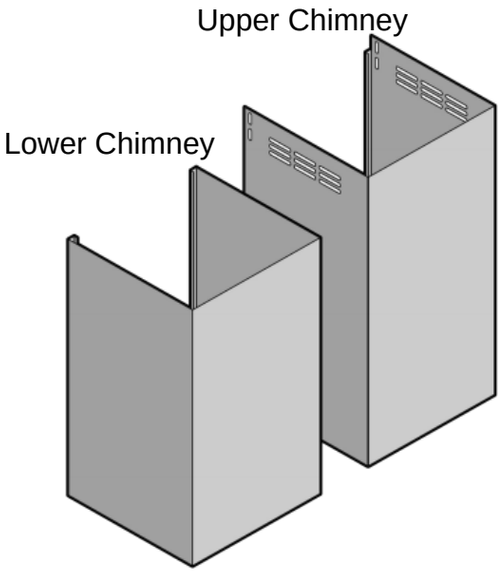



QTY: 4PCS

Anchor Screw

(M4x35mm)

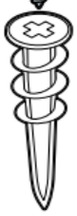

QTY: 4PCS

Self-Drilling
Plastic Drywall Anchor



QTY: 6PCS
(M4x8mm)

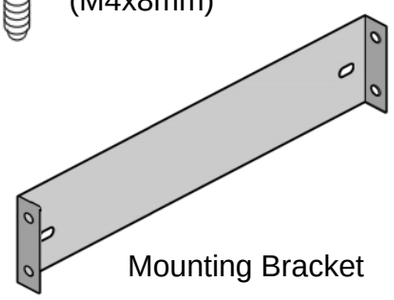

Mounting Bracket

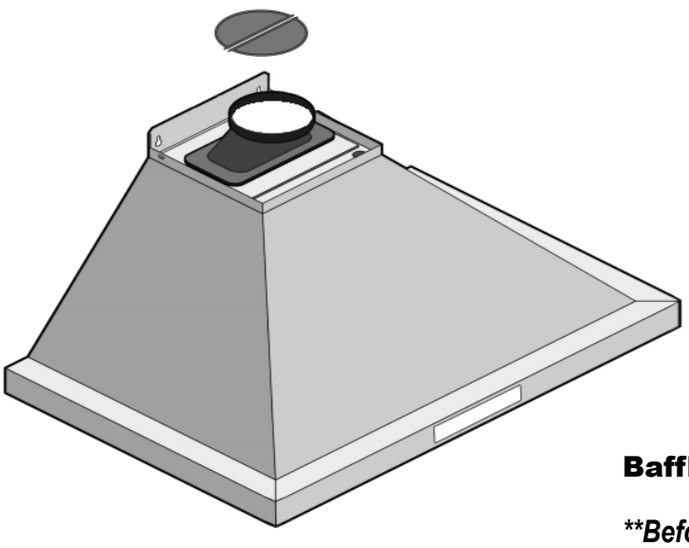

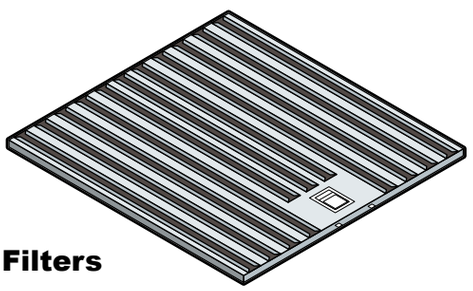

Baffle Filters

Before installing, remove the protective white film*

NOTE:
Where necessary, additional screws will be needed for installation and added support, but is not included. Please review contents before installation.

DIMENSIONS

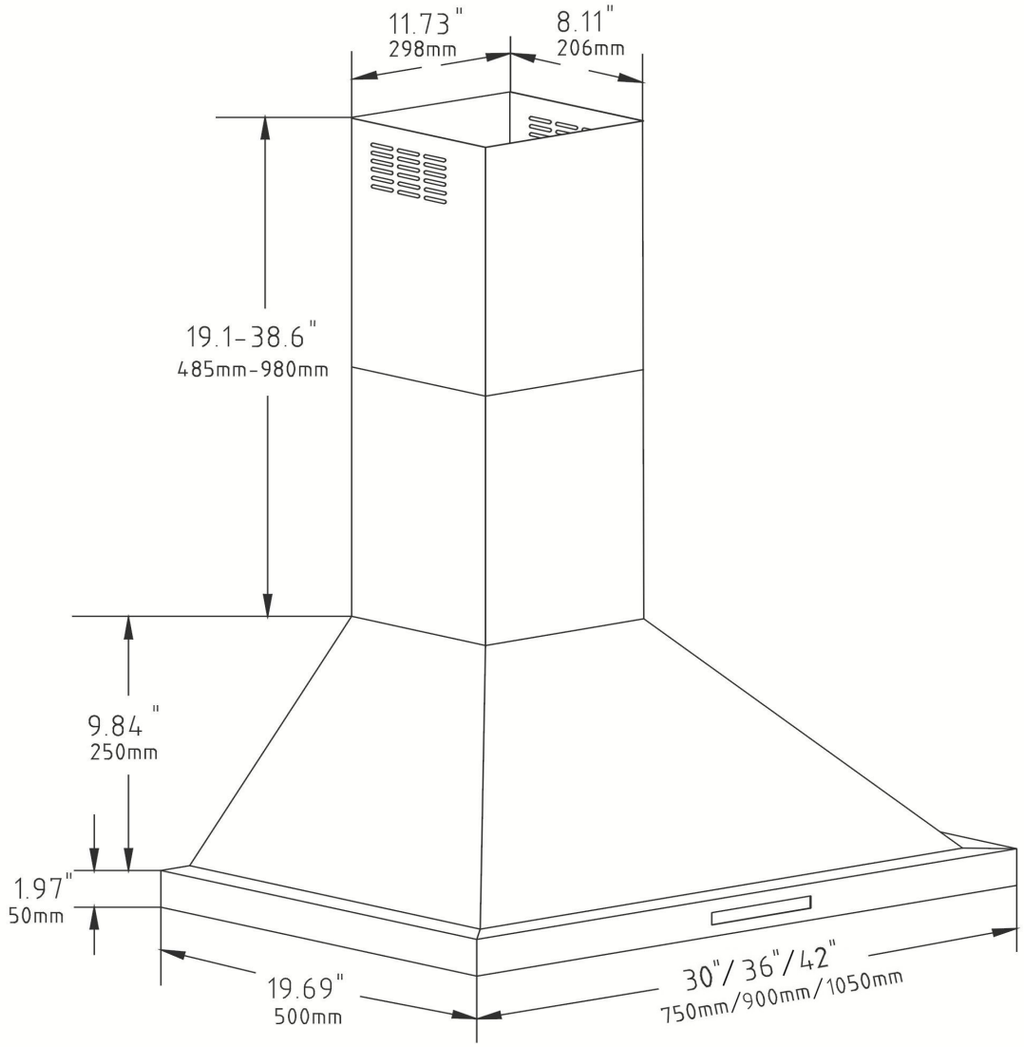

TOP VIEW

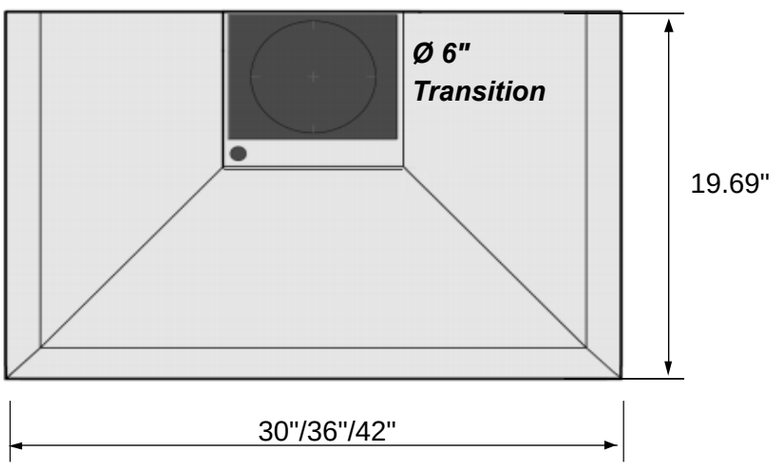

PREPARATION

⚠WARNING

Excessive Weight

Require three or more persons to move and install this range hood. Spinal or other bodily injuries could occur if it is not followed.

⚠WARNING

Severe Injury

Rotating fan can cause severe injury. Stay clear of fan when motor is running.

Advanced Preparations:

- Familiarize yourself with the controls by reading the Range Hood Operations section.
- Place the range hood on a flat, stable surface. Connect it to a designated standard outlet (refer to the product label for the correct voltage) and turn the range hood on. Verify all functions by referring to the Range Hood Operations section.
- Place all supplied parts and required hardware on a flat, stable surface, and check to ensure all parts are included.
- Carefully remove the white or blue plastic protective coating from the range hood.

Preparations:

NOTE: To avoid damage to your hood, prevent debris from entering the vent opening.

- Decide on the location of the venting pipe from the hood to the outside. Refer to Venting Methods.
- A straight, short vent run will allow the hood to perform more efficiently.
- Avoid as many transitions, elbows, and long runs as possible, as these can reduce the hood's performance.
- Using 45-degree elbows is preferable to using 90-degree elbows.
- IMPORTANT: Peel off the white plastic protective coating from the hood, if present.
- Use aluminum tape to seal joints between pipe sections.

DO'S AND DON'TS FOR DUCT VENTING

a. Avoid using sharp elbows; use 45-degree elbows instead, whenever possible.

b. DO NOT use reducers. Keep the duct size consistent as specified in the manual. Using a reducer will reduce the hood's CFM and increase noise.

c. DO NOT use plenum boxes. Plenum boxes create turbulence and reduce hood efficiency. Use a smooth elbow to direct the air outdoors.

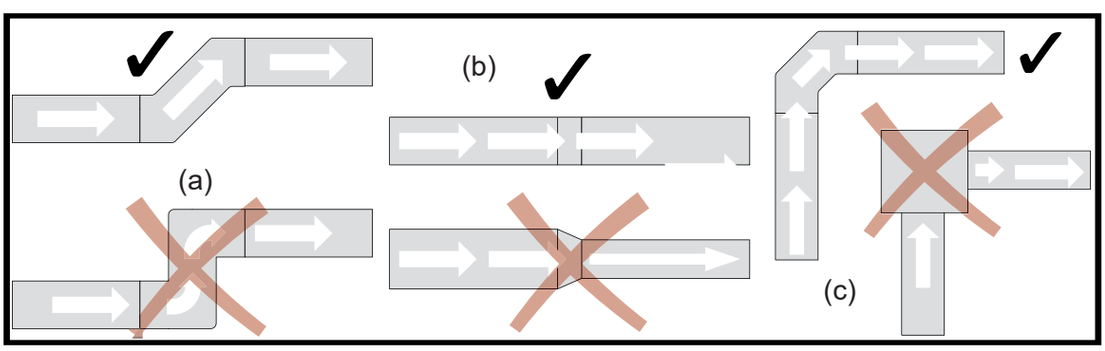

THE HOOD MUST BE TESTED BEFORE INSTALLATION.

Vikio will not be responsible for additional labor costs related to reinstallation of the hood due to transportation internal damage or wiring issues.

ROUGH-IN

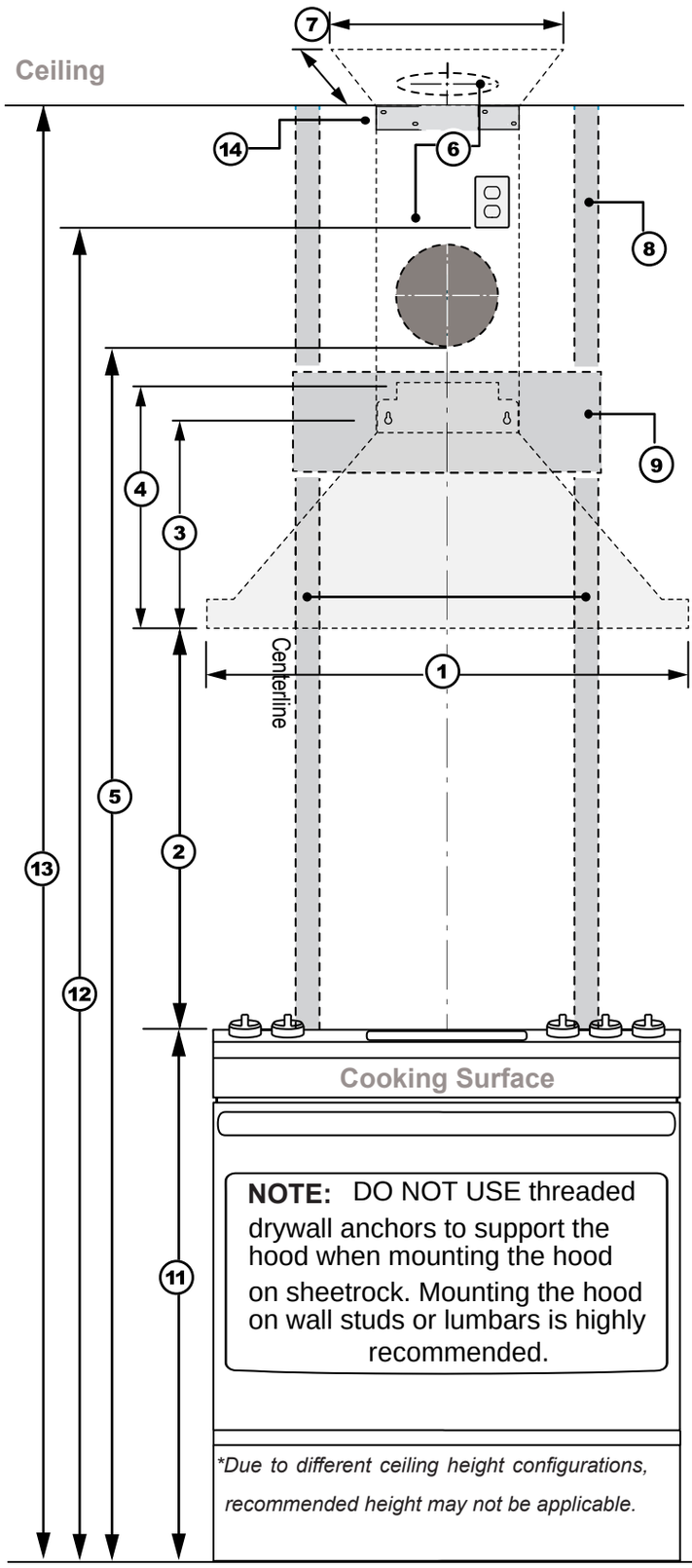

1. Available width sizes: 30"/36"/42"
2. Min: 24", Max: 30" Optimally 28"
3. Height from bottom of range hood to installation holes: 11.8"
4. Height from bottom of range hood to top of transtion: 12.6"
5. Wall duct height Min height: 78.5" from bottom of duct to ground when range height to stove is 24" Min height: 84½" from bottom of duct to ground when range height to stove is 30"
6. Preferred areas to install 6"-Ø wall or roof vent ducting
7. Chimney length and width: 11.73" x 8.11"(Height will vary)
8. Typical stud behind wall setup
9. Cut out drywall for plywood brace support
10. If needed, drill holes at the rear panel of the range hood in order to mount wood screws (not included) in to the studs for additional support.
11. Typical stove top height: 36"
12. 120v Power Outlet location: Min height: 78" from power outlet to floor when range height to stove is 24" Min height: 85" from power outlet to floor when range height to stove is 30"
13. Ceiling height: Typical 96", Max 108". For higher ceilings, please contact us to purchase an extension.
14. Install area for metal bracket which holds up the chimney

ROUGH-IN (Continued)

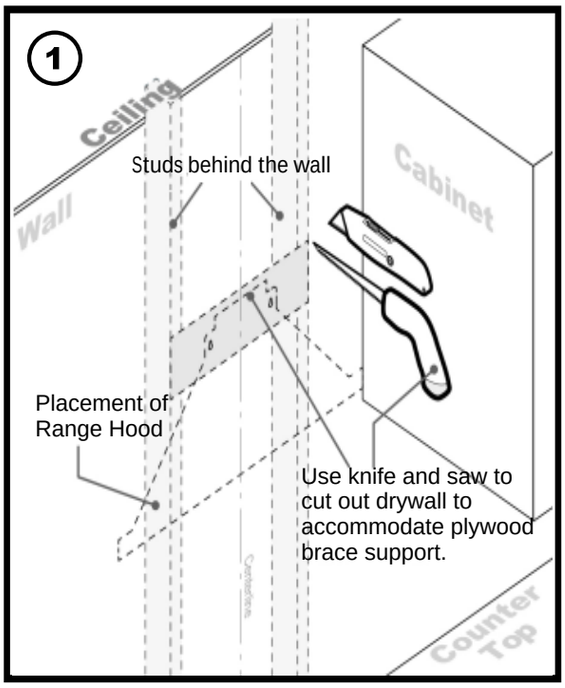

(1) Use knife and saw to cut out drywall to accommodate a plywood brace support. The inserted plywood should be the same depth as the drywall slab it is replacing.

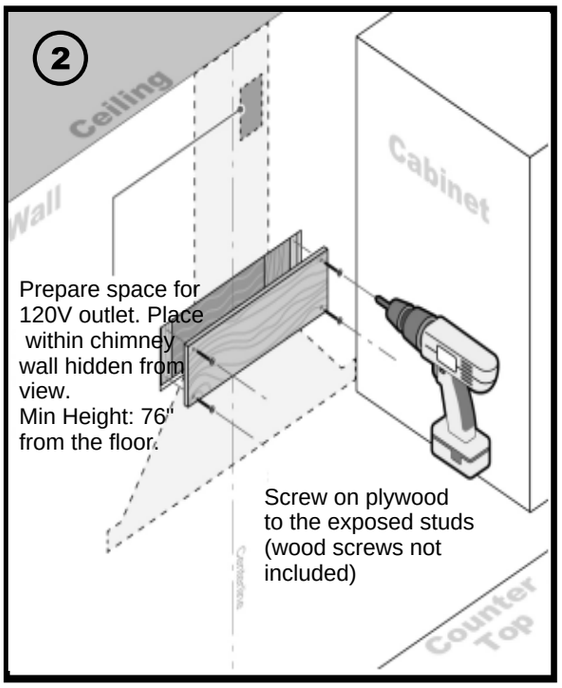

(B) Screw on plywood to the exposed studs (wood screws not included). Prepare space for 120v outlet. Place within chimney wall, hidden from view. Min Height: 76” from the foor.

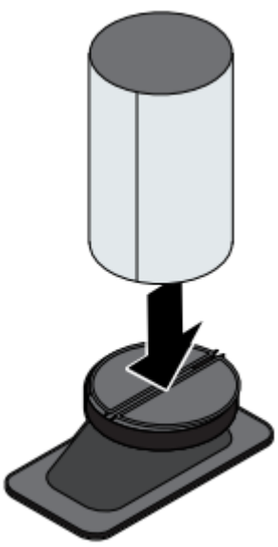

INSTALLATION

The adaptor can be used to protect the faps.

NOTE: DO NOT USE threaded drywall anchors to support the hood when mounting the hood on sheetrock. Mounting the hood on wall studs or lumbars is highly recommended.

CAUTION: Make certain the range hood is secure before releasing! For safety purpose, pre-drilled mounting holes are provided through the back of the hood. For a more secure installation, use as many mounting holes as needed to secure from the inside of hood.

INSTALLATION (Continued)

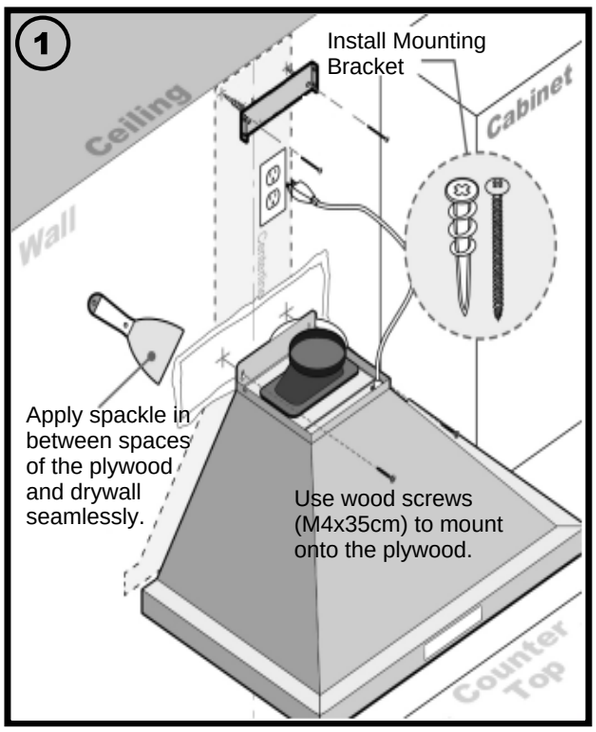

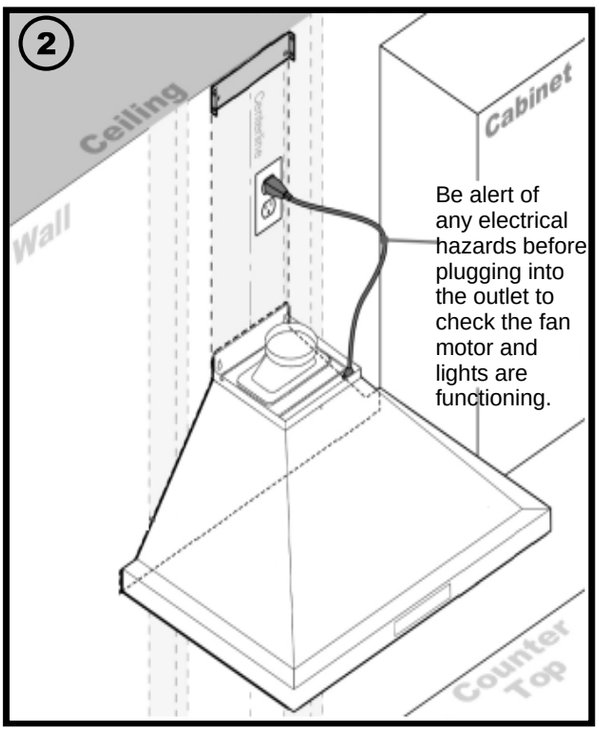

(1) Apply spackle in between spaces of the plywood and drywall seamlessly. Sand down any rough spackle to smooth out. Paint area if required.
Use the drywall plastic anchors and metal screws to install the mounting brackets to prepare for the upper chimney.
Fasten wood screws to mount onto the plywood based on your earlier measurements already established.

(2) Connect the range hood to a designated standard outlet (please refer to the product label for the suitable voltage of this unit). Check the fan motor and lights are functioning.

SAFETY WARNING: Risk of electrical shock. This range hood must be properly grounded. Make sure this is done by qualifed electrician in accordance with all applicable national and local electrical codes. Before connecting wires, switch power of at service panel and lock service panel to preduct power from being switched on accidentally.

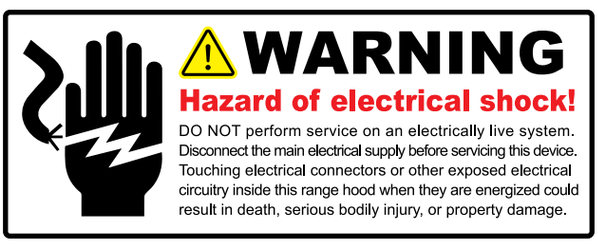



INSTALLATION (Continued)

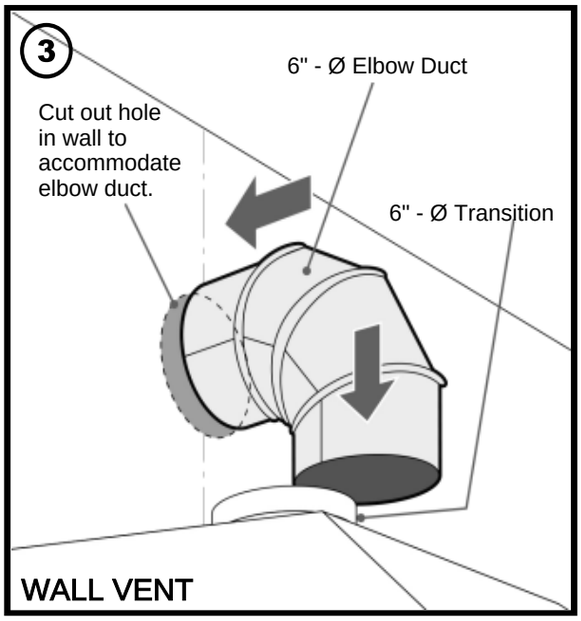

(3) Distance from wall to transition circumference edge for 6".

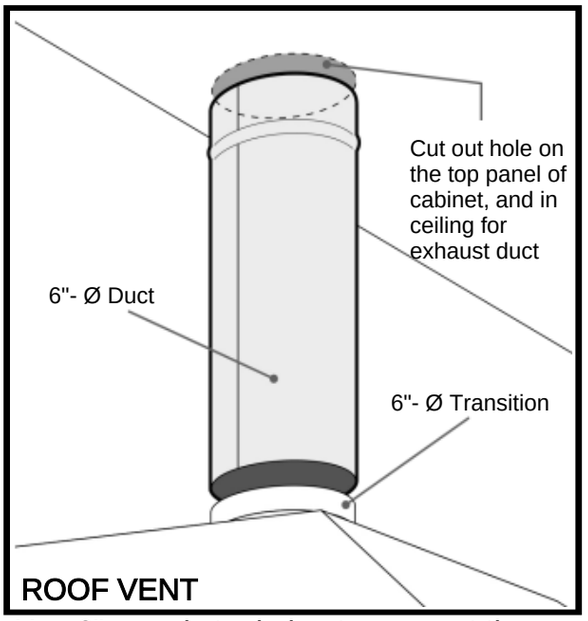

Use 6" round steel pipe to connect the exhaust on the hood to the duct work above. Use aluminum tape to make all joints secure and air tight.

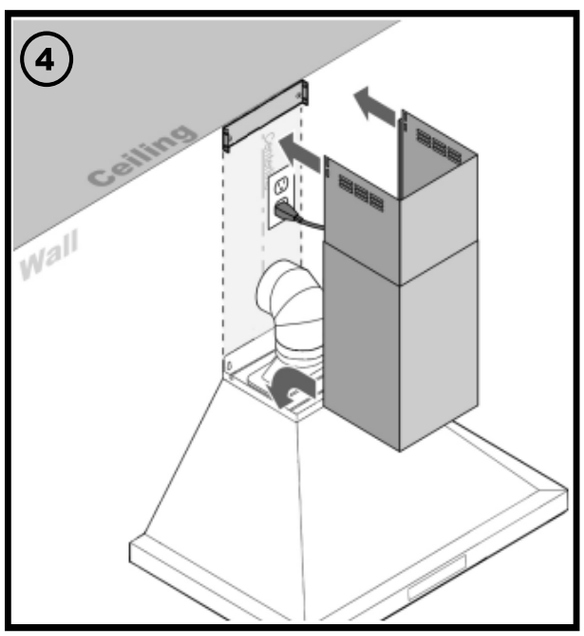

(4) Insert both chimneys onto the range hood. They should be able to slide into the gap of the top housing.

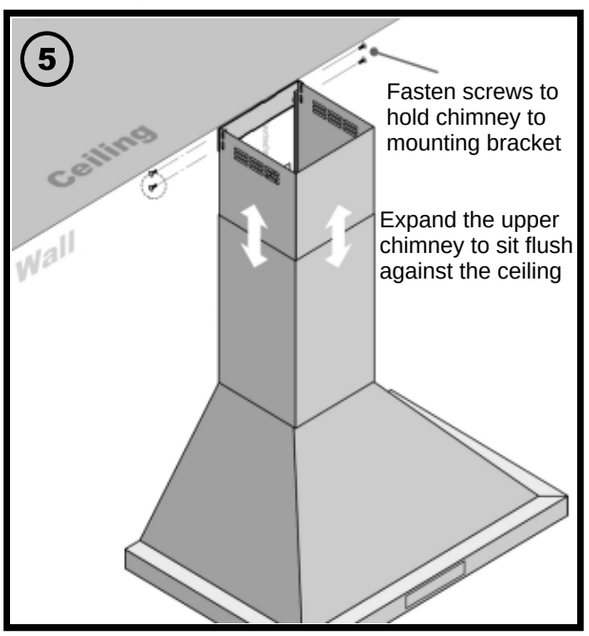

(5) To avoid scratching the chimney, extend the upper chimney slowly and carefully to the chimney-mounting bracket and tighten screws.

CAUTION: Make certain the range hood is secure before releasing!

Connect the range hood's electrical wiring and check the fan motor and lights are functioning.

Be alert of any electrical hazards and refer to the product label for the suitable voltage of this unit.

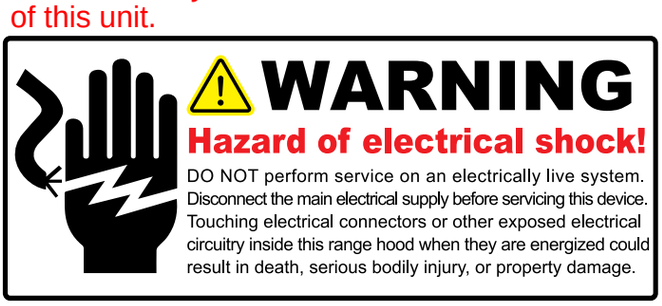



If you need to do a ductless installation, please follow the installation steps without installing a smoke pipe. And install the activated carbon.

HOW TO REPLACE OR CHANGE CHARCOAL FILTERS

It is recommended to use ducting to direct vent your range hood whenever possible. If you have a recirculating kit installed on your under cabinet hood, carbon charcoal flters are available to recirculate the air through your hood.

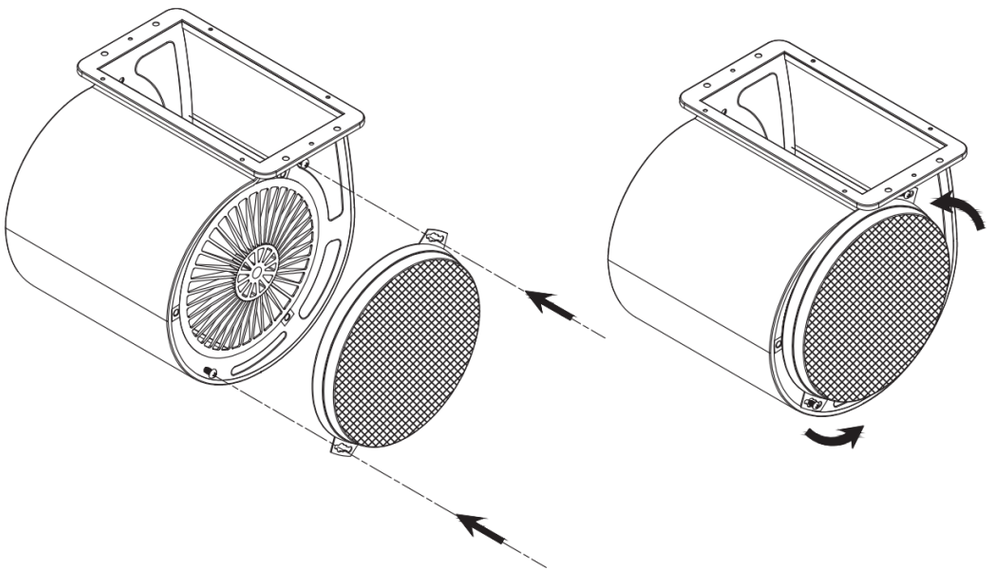

Scan for a charcoal filter installation tutorial video Replacing Char.

INSTALLATION OF FILTERS

BOTTOM VIEW

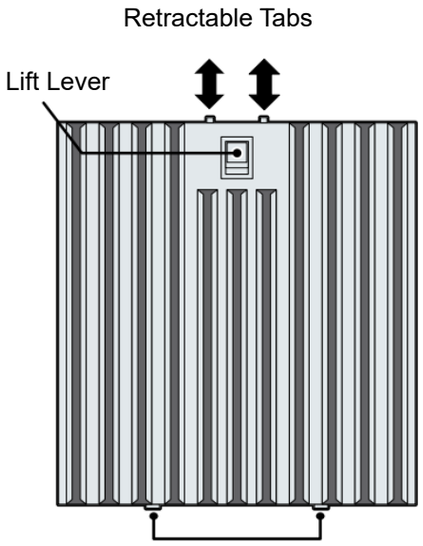

Before installing, remove protective white film

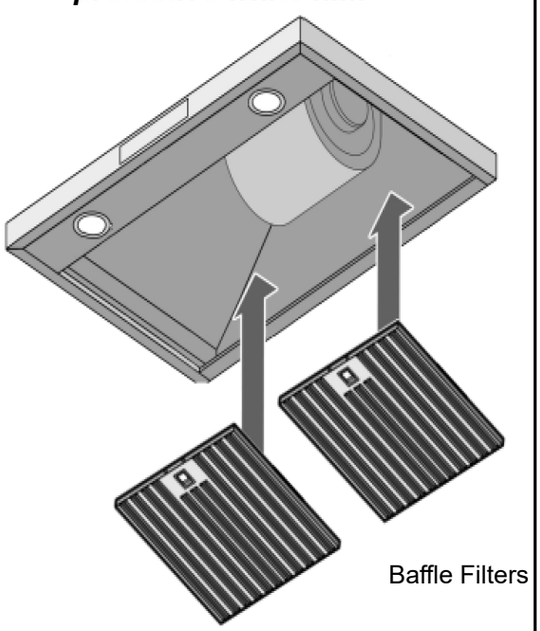

SIDE VIEW

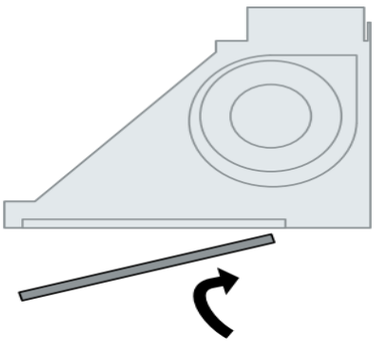

Angle filter and direct tab inserts toward the aft slot of the range hood opening.

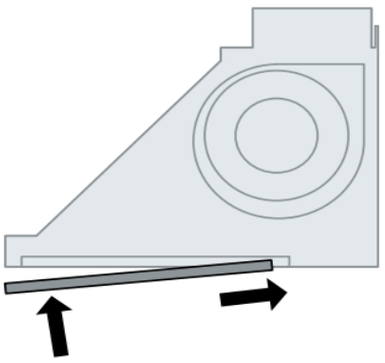

While continuing to install the filter, ensure you lift the lever for the retractable tabs to clear way for flush insertion.

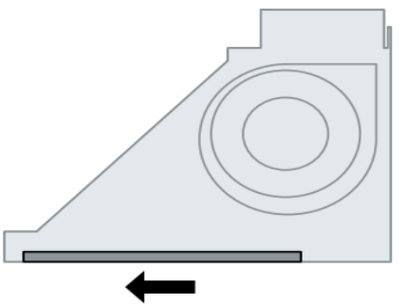

When filter sits flush within the opening, release the lever to lock in place.

VENTING METHODS

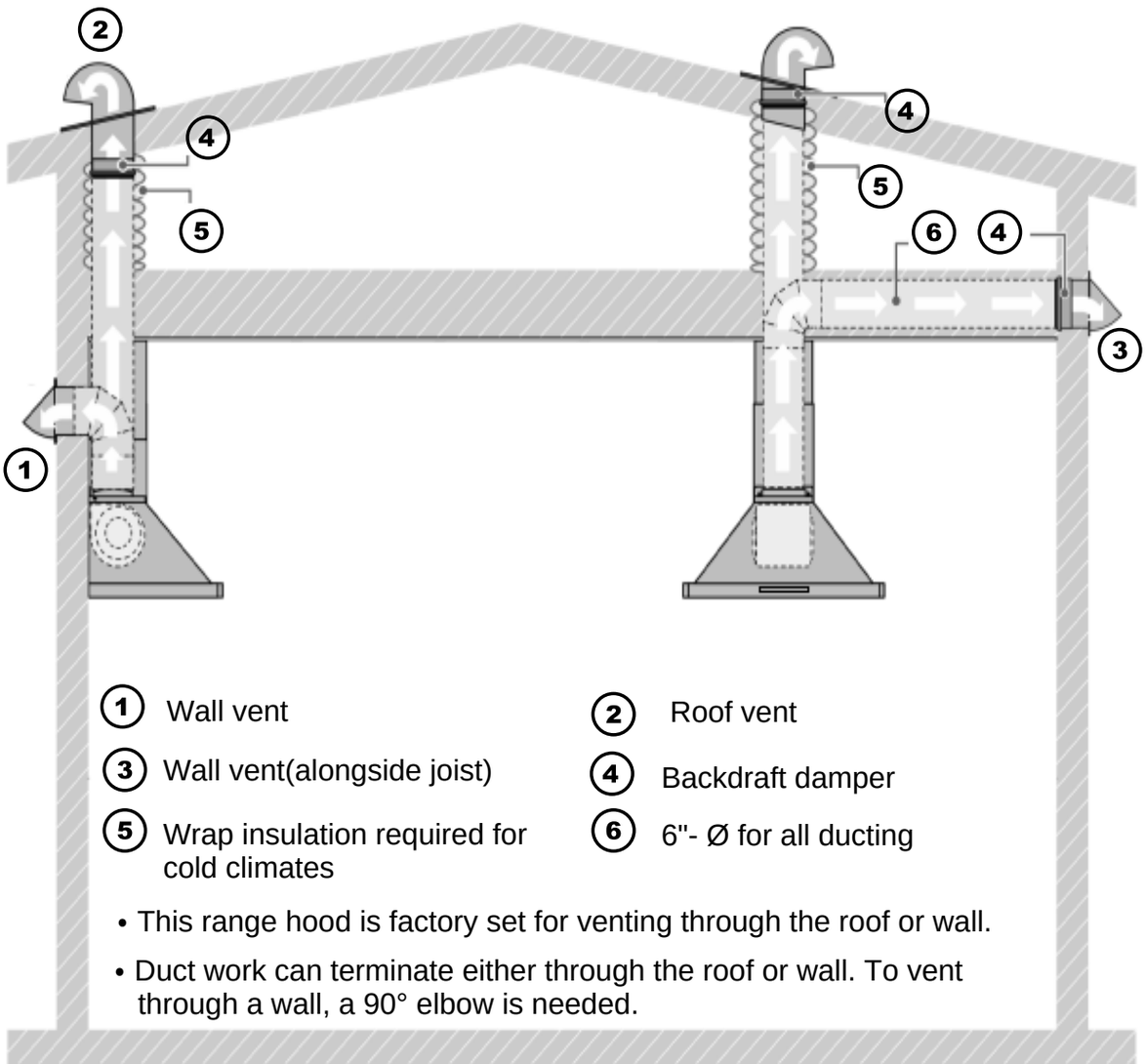

1. Wall vent
2. Roof vent
3. Wall vent(alongside joist)
4. Backdraft damper
5. Wrap insulation required for cold climates
6. 6"- Ø for all ducting

- This range hood is factory set for venting through the roof or wall.
- Duct work can terminate either through the roof or wall. To vent through a wall, a 90° elbow is needed.

IMPORTANT:

- NEVER exhaust air or terminate duct work into spaces between walls, crawl spaces, ceiling, attics or garages. All exhaust must be vented to the outside.
- Use metal/aluminum duct work only.
- Fasten all connections with sheet metals crews and tape all joints with certifed Aluminum Tape.
- Use caulking to seal exterior wall or roof opening around the cap.
- Colder climates require wrapping insulation around the ducts and optional blowers.
- The system must have a Backdraft Damper.

RANGE HOOD OPERATIONS (Digital Panel)

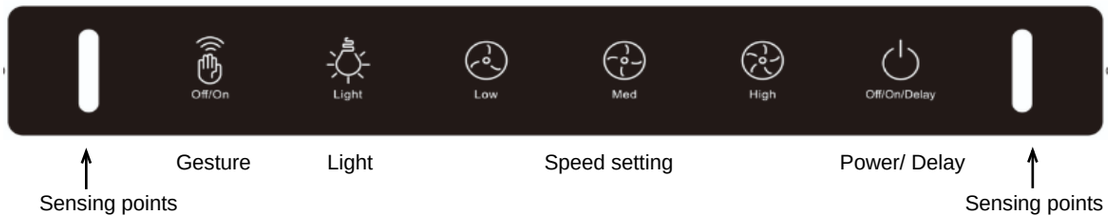

FUNCTION	OPERATION	INDICATES	REMARK
ON/OFF	Method 1: Press Power button to turn on the system, press Power button once to turn off the system. Method 2: In the Gesture on state, quickly wave your hands(left or right) to open the system .	When the switch is on/off, the speed and light buttons are on/off at the same time.	1.Switch factory default is med speed 2. Speed by default remember the last used setting.
SPEED	Method 1.Press the Speed button to choose the speed. Method 2: In the Gesture on state, from left to right to increase the fan speed; from right to left to reduce the fan speed. Method 3: When the motor is running, press Speed button to turn off the current speed.	If the indicator is on, it indicates the current speed. If the indicator is off, it indicates that the fan is off.	Gesture by default remember the last used setting.
DELAY	When the motor is running, press Power button to activate the delay off timer function (3 minutes).	If the indicator blinks, the delay off timer function starts.	
GESTURE	Pressthe Gesture button to turn on or off the gesture function.	-The indicator is all on, it means the gesture function is on; -The indicator is dimmed, it means the gesture function is on normally under the shutdown state; -The indicator is off, it means the gesture function is off.	Gesture by default is turned on.
LIGHT	Press Light button to turn on or off the lighting function.	-The indicator is on, which means the light function is on. -The indicator is off, which means the light function is off.	LED lights are individually controlled.

EXPLOSION DIAGRAM

No.	Description	Quantity
1	Chimney Mounting Bracket	1
2	Upper Chimney	1
3	Lower Chimney	1
4	6" Flexible Duct Tube	1
5	6" Round Duct Connector	1
6	Rubber Gasket	1
7	Power Cord	1
8	Range Hood Body	1
9	Control Panel	1
10	Light	2
11	Right Protective Grill	1
12	Fan Blade	1
13	Squirrel Cage	1
14	Motor	1
15	Left Protective Panel	1
16	Capacitor	1
17	Circuit Board	1
18	Plastic box	1
19	Stainless Steel Baffle Filter	2(30") / 3(36"/42")

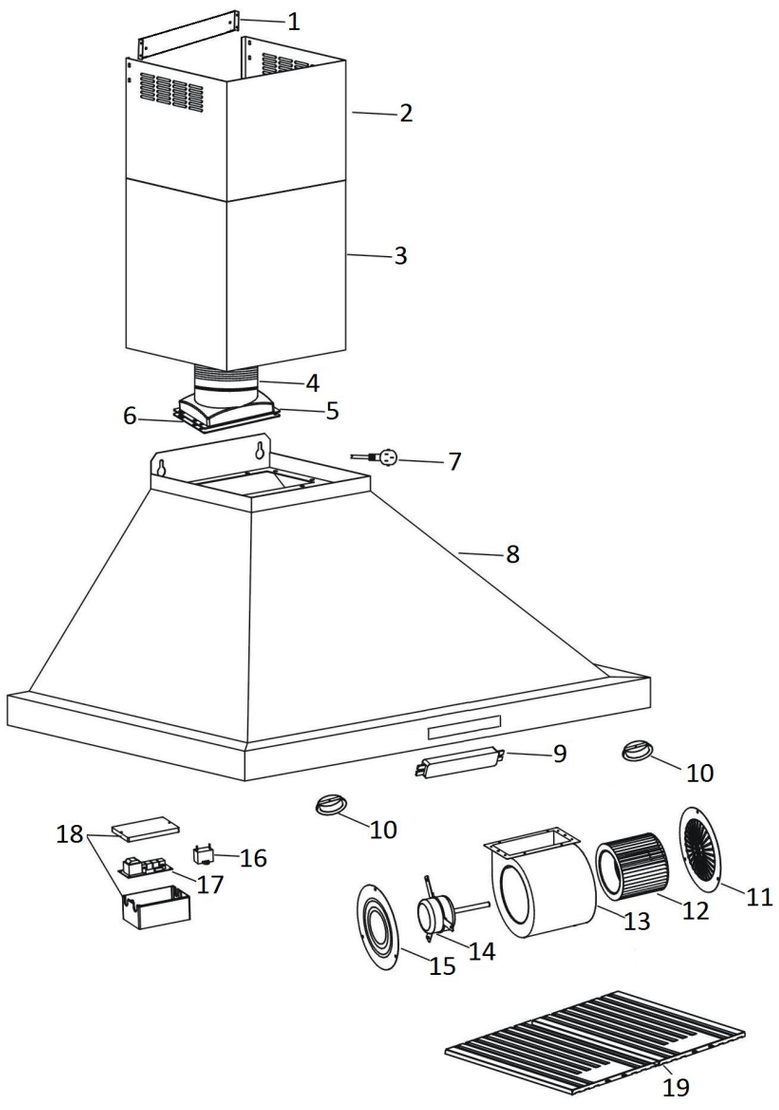

TROUBLESHOOTING

ISSUE	POSSIBLE REASON	SOLUTION
The blower or fan seems weak.	A large amount of oil has accumulated on the baffle filter.	Clean or replace the baffle filters.
	Use the wrong duct size.	Use the right duct- 3-1/4x9-3/4" or 6" round type.
	The distance between the range hood and the stove is too far.	Adjust the distance between the range hood and the stove top
	The duct is clogged or if damper unit(half-circular flapper) is not installed correctly.	Clear the blockage of the duct. Install the flapper correctly.
Gesture invalid.	Gesture function is not turned on.	Turn on the Gesture function.
	The hand wave motion does not pass through two sensor points or the speed is too slow.	Please ensure that you move your hand in a horizontal motion over the sensing points, maintaining a distance no closer than 5.9 inches from the panel.
	The circuit board is malfunctioning	Contact the customer to replace a new carcuit board.
Range hood does not work.	Check that there is power to the range hood.	The most common issue is that the circuit breaker is off or the fuse has blown.
		Make sure the speed has been selected at the controls.
		Turn off the power and check that all wires are properly connected. Refer to your specific model's installation instructions for proper wiring.
Range hood is making a rattling noise.	The motor is loose.	Turn off the power and remove the filter and check that all screws are secure and tight around the motor.
	The duct work connection is loose.	The ductwork connection to the pipe is tight. Add duct tape if necessary.
	The hood is not secured in place.	Check the installation of the hood.
	If it is stuck, it will sound like motor noise but it's really the damper.	Check whether the air outlet is blocked by foreign matter or air duct deformation and the whether damper is opened normally.
The motor is working, the light is not on.	The light connector is not connected	Check whether the LED connector is connected
	Light out of order	Contact customer service to replace the lamp.
	The circuit or switch board is out of order.	Contact customer service to replace the switchboard or circuit board.
The lights cannot be turned off.	The circuit board is out of order off.	Contact customer service to replace the circuit board

MAINTENANCE

Operations:

- Read and understand all instructions and warnings in this manual before operating the appliance. Save these instructions for future reference.
- Always keep safety grills and filters in place. Without these components, operating blowers could catch hair, fingers, or loose clothing.
- Never dispose of cigarette ashes, ignitable substances or any foreign objects into the blowers.
- Never leave cooking unattended. When frying, oil in the pan can easily overheat and catch fire. The risk of combustion increases if the oil has been reused multiple times.
- Never cook over open flames under the range hood. Always monitor deep-fryers during use, as superheated oil may be flammable.
- Grease buildup on the blower and filters increases flammability. Keep the unit clean and free of grease and residue to prevent possible fires.
- Clean filters periodically to remove accumulated cooking residue. Replace old or worn filters immediately.
- DO NOT operate the blowers when filters are removed. Never disassemble parts for cleaning withoutproper instructions. Disassembly should be performed by qualified personnel only. Read and understand all instructions and warnings in this manual before proceeding.
- SAFETY WARNING:

  Never put your hand into the area housing the fan while it is operating!

Cleaning Exterior surfaces:

- Clean periodically with stainless steel cleaner and clean cotton cloth. Do not use corrosive or abrasive detergent (e.g. Comet Power Scruv®, EZ-Off® oven cleaner), or steel wool/scoring pads, which will scratch and damage the stainless steel surface. For heavier oil use liquid degrease such as “Forumla 409®” or “Fantastic®” brand cleaner.
- If the stainless steel hood appears splotchy, use a stainless steel cleaner to clean its surface. Avoid getting cleaning solutions on or inside the control panel. Follow the instructions provided with the stainless steel cleaner.
  CAUTION: Do not leave the cleaner on too long, as this may damage the hood ’ s finish. Use a soft towel to wipe off the cleaner, gently rubbing any stubborn spots. Then, dry the hood with a soft, dry towel.
- After cleaning, you may use a non-abrasive stainless steel polish such as 3M® or ZEP® to restore the stainless steel ’ s luster and grain. Always rub lightly with a clean cotton cloth and follow the grain direction.
- DO NOT allow deposits to accumulate or remain on the hood.
- DO NOT use ordinary steel wool or steel brushes, as small steel particles may stick to the surface and cause rusting.
- DO NOT allow salt solutions, disinfectants, bleaches, or harsh cleaning compounds to remain on stainless steel for extended periods. Many of these contain chemicals that may cause damage. Rinse the surface with water after exposure and wipe dry with a clean cloth.

Cleaning Grease Filter:

- Filters should be cleaned every 30 hours of use.
- ***Baffle filters are dishwasher safe.*** Spray the filters with Formula 409® or an equivalent degreasing detergent and allow them to soak if they are very dirty. Dry the filters thoroughly before reinstalling and using the hood.

Replacing Filters:

- If filters wear out due to age or prolonged use, please contact Vikio Range Hoods to order replacement filters.

Replacing the light bulb:

- This range hood uses LED bulbs (please refer to the specific model purchased for exact specifications): For USA/Canada:LED 3W 120V.

CONTROL PANEL REPLACEMENT

Replacing *Control Panel*:

1. Make sure the range hood is unplugged or turn OFF breaker.
2. Remove the baffle filters.
3. Remove the screws on the LED Light panel.
4. Remove the screws holding the control panel.
   Unplug the control panel, and replace with a new control panel.
5. Fix the screws holding the control panel.
6. Fix the screws of LED Light panel.

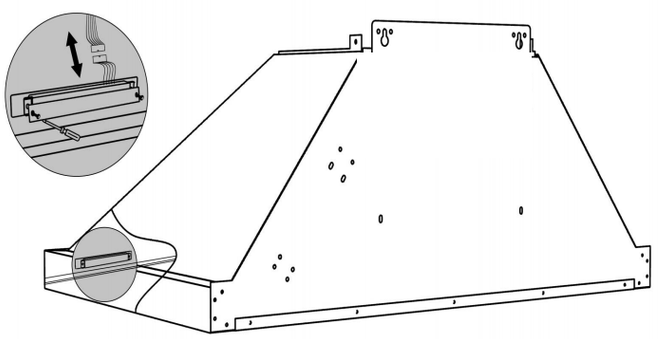

WARNING Never work on or clean the range hood while the power is on.
Always unplug the unit or switch the electrical breaker to the off position.

WIRING DIAGRAM (Digital Panel)

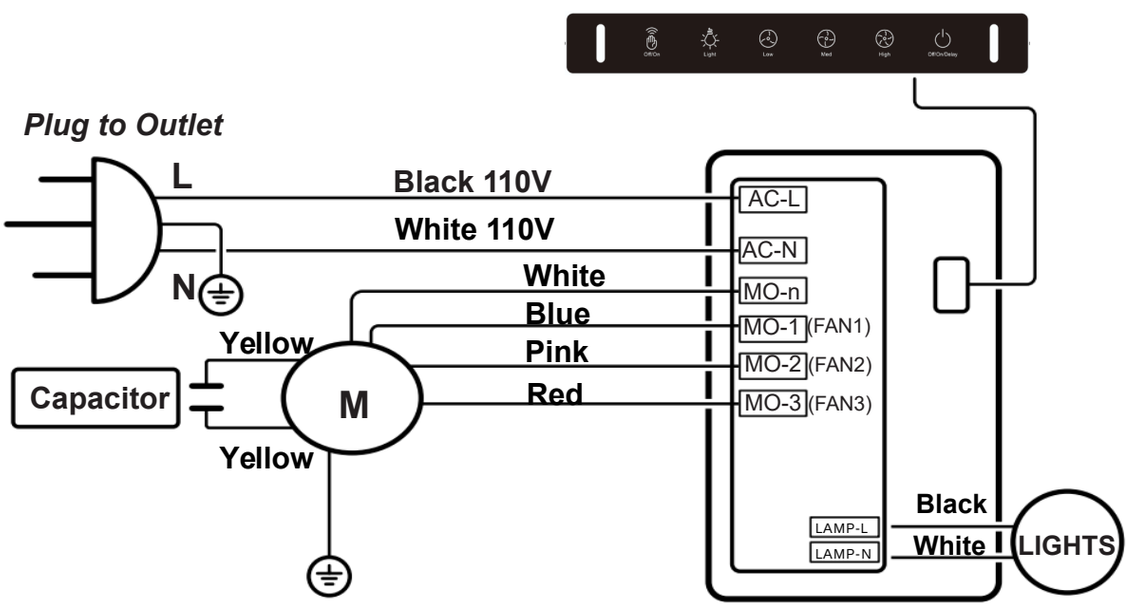

Scan for a button panel installation tutorial video.

CIRCUIT BOARD REPLACEMENT

Replacing *Circuit Board* :

1. Make sure the range hood is unplugged or turn OFF breaker.
2. Remove the baffle filters.
3. Remove the screws on the circuit board box.
4. Take out the circuit board and unplug the wires connected to the circuit board one by one.
5. Replace the circuit board, plug the wires one by one, and then secure the circuit board with screws.
6. Put the wires back to the board box, fix the screws, cover the panel and secure it with screws.

WARNING

Never work on or clean the range hood while the power is on. Always unplug the unit or switch the electrical breaker to the off position.

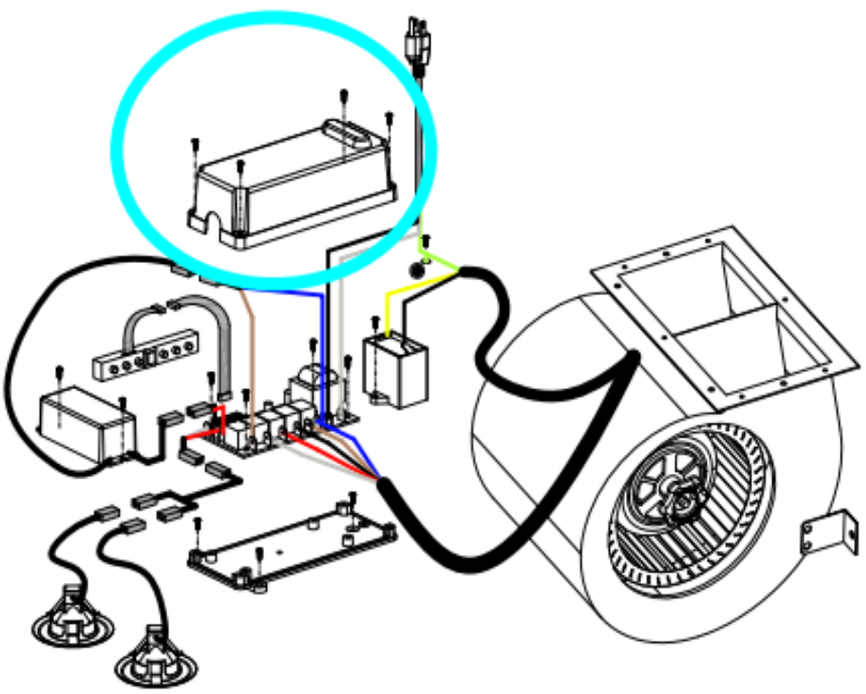

Scan for a circuit board installation tutorial video.

BULB REPLACEMENT

WARNING

Hazard of Burns

Light bulb can become extremely hot when turned on.
DO NOT touch bulb until switched off and cooled.
Touching hot bulbs could cause serious burns.

WARNING

Hazard of electrical shock!

DO NOT perform service on an electrically live system.
Disconnect the main electrical supply before servicing this device.
Touching electrical connectors or other exposed electrical circuitry inside this range hood when they are energized could result in death, serious bodily injury, or property damage.

Replacing *LED 3W* Light Fixture:

WARNING

Make sure the range hood is unplugged or turn OFF breaker and the lights are cool to touch.

1. Turn the light to the left and it will loosen.

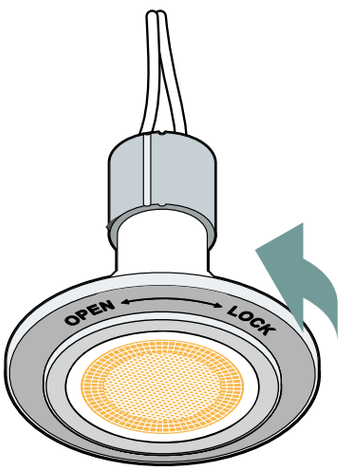

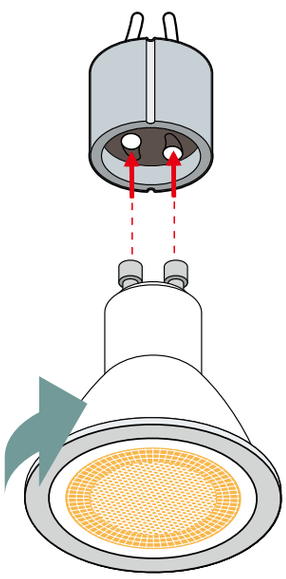

2. Take a new LED light, the light leg is aligned with the hole on the lamp holder, and then turn to the right, and the replacement is completed.

Scan for a light bulb installation tutorial video.

HOW TO CLEAN AND REPLACE THE GREASE CUP

A removable plastic grease cup is designed to catch excess grease at the bottom of the motor. It's recommended to remove it every 2 – 3 months, wash it, then re-install it.
To remove or install the grease cup, remove the baffle filters on your hood and slide the cup it into brackets located at the bottom of the motor. See below.

WARNING

Never work on or clean the range hood while the power is on. Always unplug the unit or switch the electrical breaker to the off position.

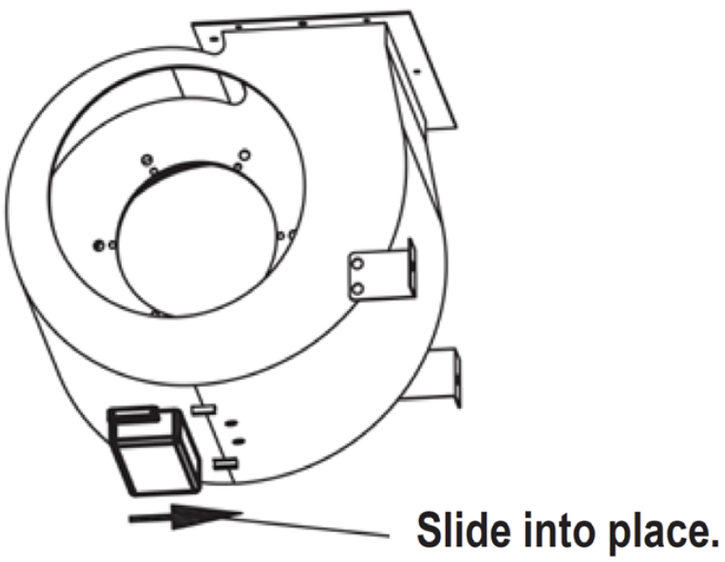

Scan for a grease cup installation tutorial video.

WARRANTY

TO OBTAIN SERVICE UNDER WARRANTY:

You must present proof of the original purchase date.

Please provide an original dated proof of purchase (sales receipt/invoice) to obtain service under warranty.

Two Year Parts Warranty:

For two years from the date of original purchase, Vikio Range Hoods will provide free replacement parts or components that fail due to manufacturing defects, excluding consumable items.
Subject to the conditions and limitations below, Vikio Range Hoods will replace any product part found defective due to improper workmanship or materials.
Replacement parts or products will be provided on an exchange basis and may be new or refurbished to be functionally equivalent to new.

Who is Covered:

This warranty is extended to the original purchaser for products bought for ordinary home use only.

This Warranty Will Be Voided When:

This warranty does not cover damage caused by negligence, improper installation, accidents, abuse, misuse, natural disasters, insufficient or excessive electrical supply, abnormal mechanical or environmental conditions, unauthorized disassembly, repair, modification, or failure to follow installation instructions.
It is also void if the product is used commercially or for other purposes than its intended use, improperly connected to equipment from other manufacturers, or repaired or modified by anyone other than Vikio Range Hoods.
Additionally, this limited warranty does not apply if the original identification information has been altered, removed, or obliterated if the product has not been handled or packaged correctly, or if it has been sold as second-hand.

What is Not Covered:

This warranty does not cover consumable parts such as light bulbs, metal, and charcoal filters, or natural wear of finishes. Damage caused by improper maintenance, use of corrosive or abrasive cleaning products (including pads and oven cleaners), or physical damage like chips, dents, or cracks due to abuse, misuse, freight damage, or improper installation are excluded.
Damage caused by accidents, fire, floods, or acts of God is not covered. Vikio Range Hoods and its distributors/resellers are not liable for any property loss or costs related to removing, servicing, installing, or diagnosing problems with this product.
This warranty is valid only in Canada and the United States and is non-transferable, applying solely to the original purchaser. It does not extend to subsequent owners. Any implied warranties, including merchantability, are limited to the duration of the express warranty starting from the original purchase date. No warranties apply beyond this period.
To obtain warranty service, contact Vikio Range Hoods with the product identification (model number/ name), a detailed description of the issue, and proof of the original purchase date. This documentation confirms the product ' s warranty eligibility and authenticity.

The information in this document is subject to change without notice, please contact Vikio Range Hoods for updated details.

DISCLAIMER

Carefully inspect all items for damages upon delivery.
Note any damages on the freight bill or express receipt, and obtain the carrier agent 's name and signature. Keep a copy to support your claim.
Once items are accepted, the owner assumes responsibility for their safe arrival. Report any damages to the carrier and file a claim immediately—failure to do so may result in claim denial. The carrier will provide the necessary claim forms.
Damages during return shipping are not covered under warranty. Customers must insure returns with the shipping company.
If your range hood is damaged in transit, contact Vikio Range Hoods within 14 days of delivery to report the issue. We will assist in filing a damage claim and investigating.
Inspect package contents carefully upon receipt. Notify us of any damages or missing parts within 14 days. Claims made after this period will not be accepted.
All products are thoroughly tested and carefully packed before shipment. Returned products must be in good working condition, including all original parts, documentation, and packaging (cartons and fillers).
A 10% restocking fee applies to all approved returns.
Returns or exchanges will not be accepted if the unit has been installed, and may be rejected if parts are missing.
Inspect the hood for damages or defects before installation. Appearance flaws found after installation that do not affect performance are not covered by warranty for returns or exchanges.
Service visits are not covered under warranty and will incur a service charge.

CONTACT US

If you require assistance, please contact Vikio Range Hoods. Have your order number and range hood model ready, as this information is necessary to process your request.
For replacement parts, we strongly recommend using only genuine Vikio parts. Our accessories and parts are specifically engineered and designed for Vikio range hoods. Each part undergoes rigorous testing to ensure maximum durability and reliability, offering a perfect factory match in appearance and functionality tailored to your specific model.

support@ rangehoods-saleservice.com www.vikiokitchen.com

The information in this document is subject to change without notice, please contact Vikio Range Hoods for updated details.

FAQ

Can my hood be ductless?

It is better to duct your range hood to the outside, but if this is not possible, ductless/ recirculating is an acceptable alternative.

Is the width of my range hoods description, the actual size?

No — the actual width of the range hood will be slightly less than the generic description of the range hood in order to better fit cabinet cutouts. For instance, a 30" (762 mm) range hood will actually measure 29 1/2" (749 mm).

Why is my range hood white/blue?

This is a protective layer that is placed on all range hoods to prevent shipping damage.

How do I clean my baffle filters and how often?

Your baffle filters should be washed with hot water and soap once per month or placed in a dishwasher for cleaning. Make sure filters are completely dry before reinstalling.

Can I clean my charcoal filter?

No — charcoal odor filter cannot be washed and must be discarded and replaced when they become noticeably dirty and/or have stopped filtering the odors. They should be replaced at least every 3-6months.

Support Email: rupport@ rangehoods-saleservice.com

www.vikiokitchen.com