WATER CREATION

MODEL: MADISON36

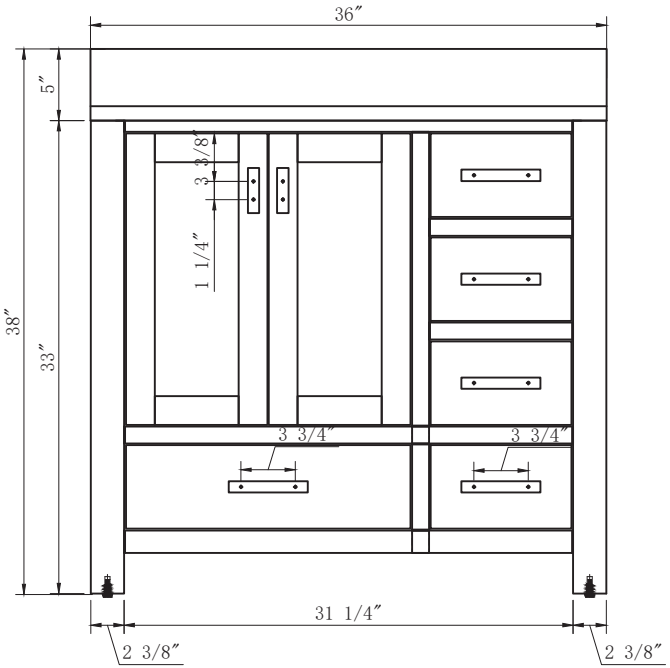

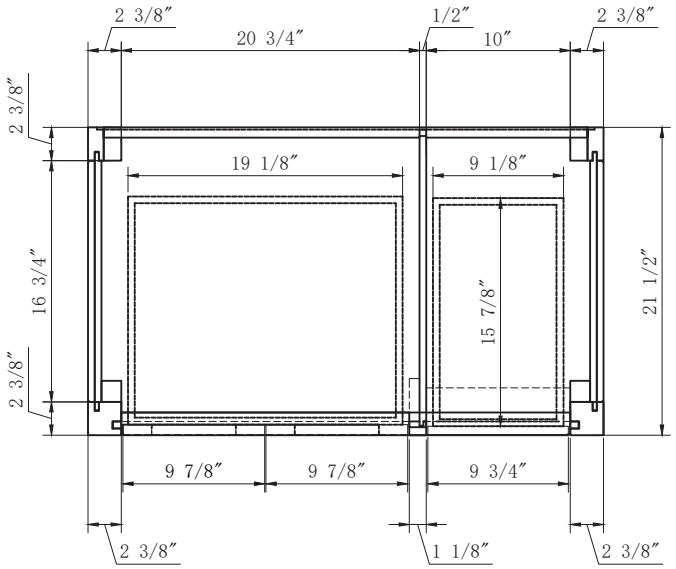

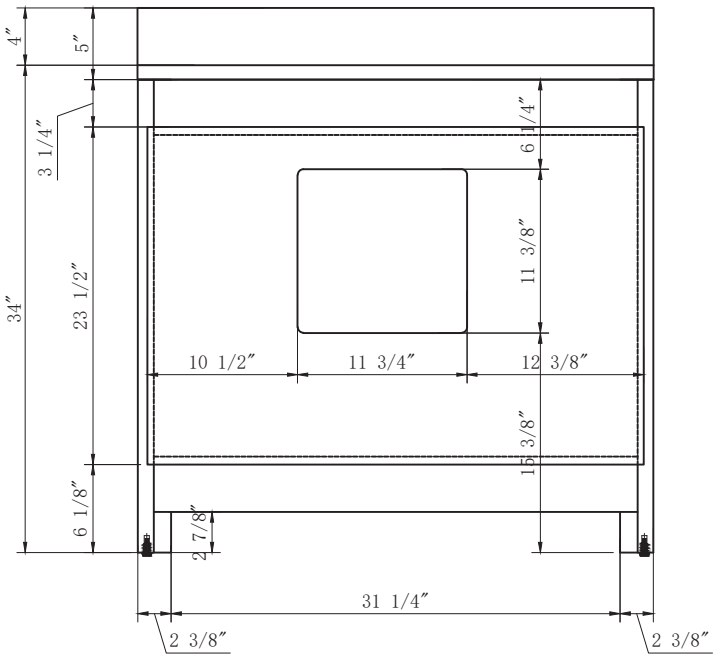

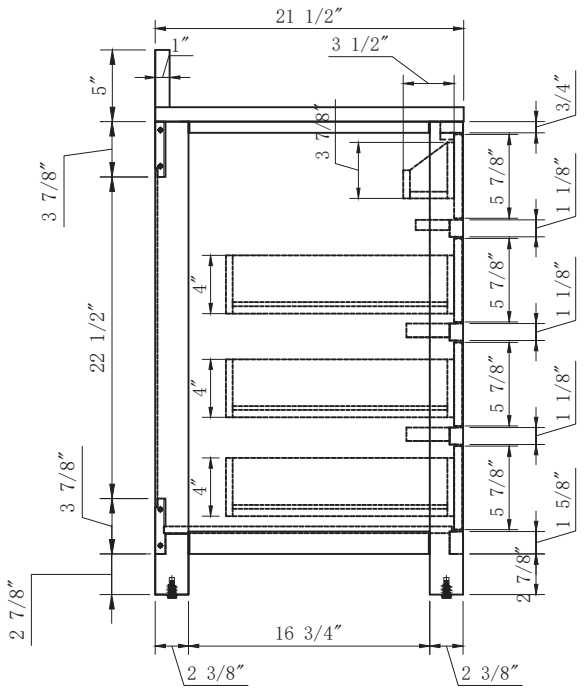

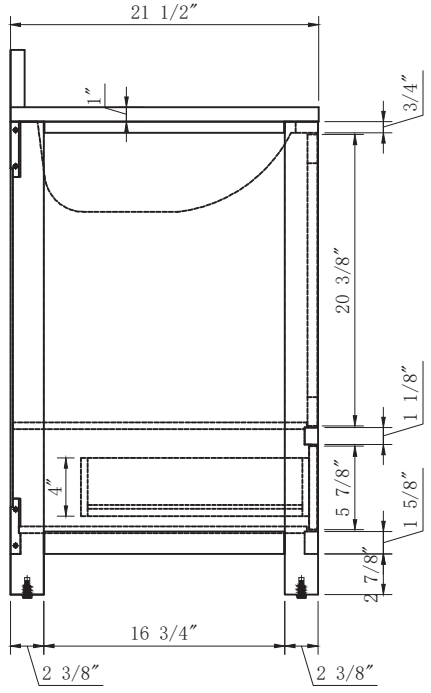

WATER CREATION

MODEL: MADISON36

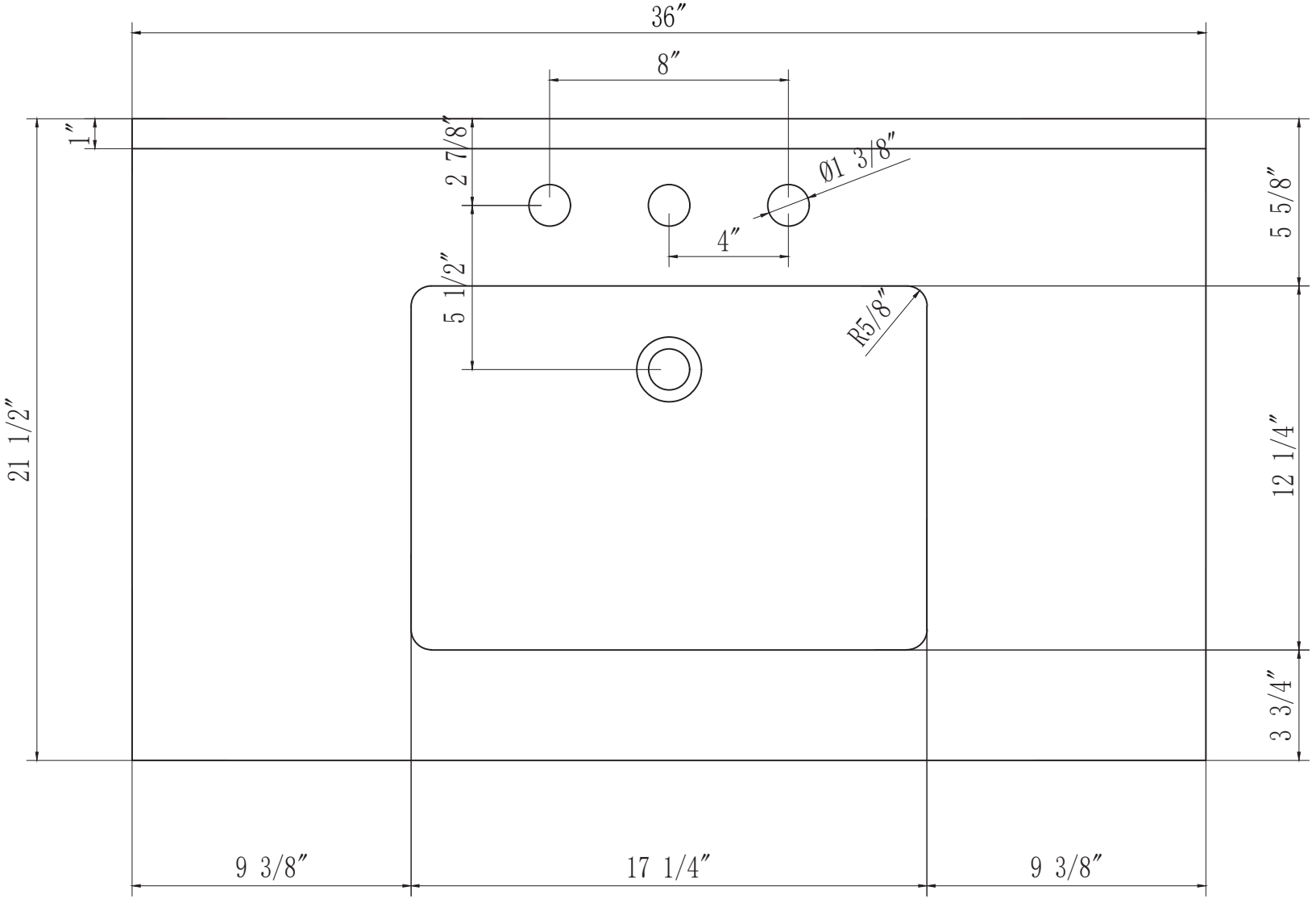

WATER CREATION

MODEL: MADISON36

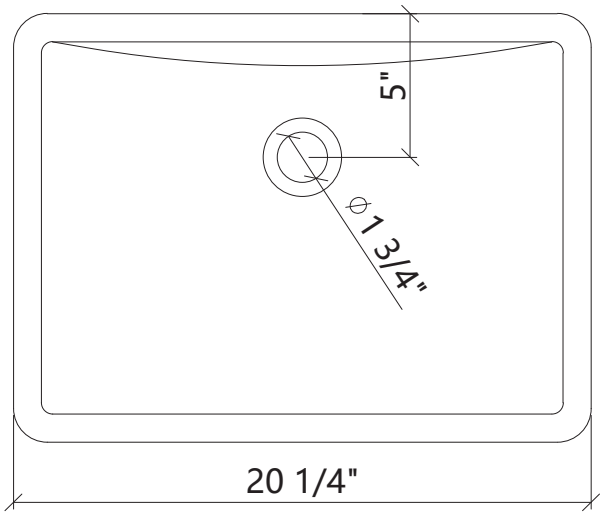

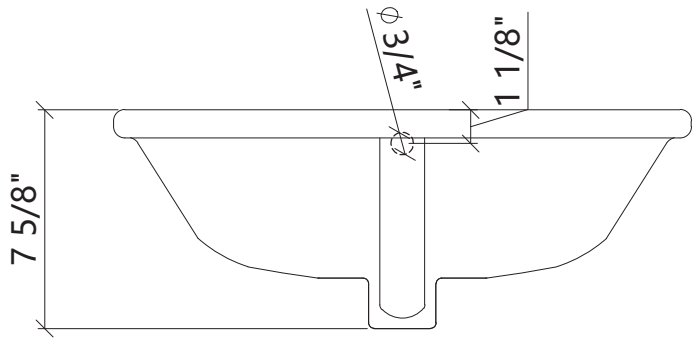

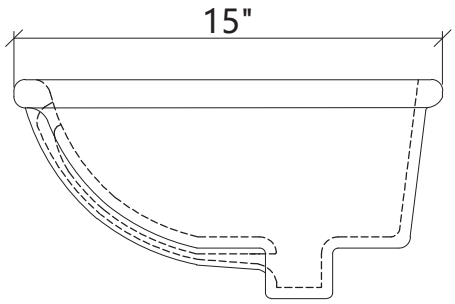

WATER CREATION

MODEL: F2-0009-BX

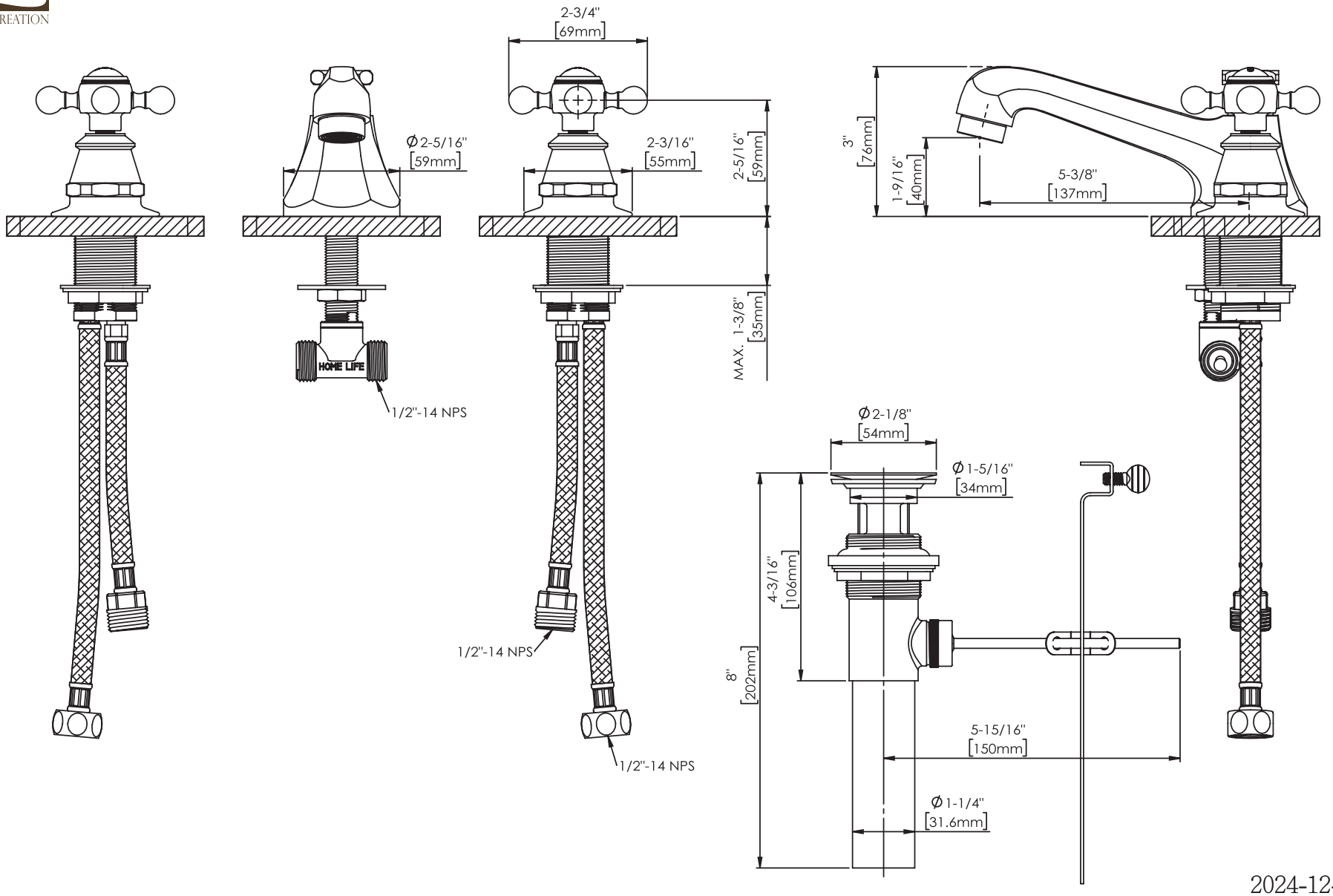

2024-12-19