Remington®

EXPRESS

INSTRUCTION MANUAL

STYLES: SAR5924E, SAR5934E, SAR5944E SAR5960E-XLR

IMPORTANT:

Please read this information and follow all safety rules carefully before operating your security safe. Failure to do so will void your warranty.

⚠ WARNING



Tip Over Hazard

A child or adult can tip the safe and be killed or seriously injured.

Failure to secure the safe as shown in these instructions can result in death or serious injury to children and adults.

Children should not play with or around the safe at any time.

110323

TABLE OF CONTENTS

IMPORTANT INFORMATION 2

1. REGISTRATION 3

2. UNDERSTANDING YOUR SAFE 4

3. UNBOXING 4

4. INSPECTION 4

5. INTIAL ENTRY 5

6. USER CODE SETUP 7

7. MANAGER CODE 7

8. LOW BATTERY ALERT 10

9. LOCKOUT MODE / TAMPER PROTECTION 10

10. USING YOUR OVERRIDE KEY 10

11. PROPER PLACEMENT AND MOVING OF SAFE 11

12. KEEPING YOUR SAFE DRY 12

13. SHIPPING AND SKID REMOVAL 12

14. SECURING YOUR SAFE 13

15. INTERIOR LIGHTING 14

16. LOCKED OUT OF YOUR SAFE 14

17. LOADING YOUR SAFE 14

18. MAINTENANCE 14

LIFETIME WARRANTY 15

DISCLAIMER - READ BEFORE SAFE SETUP

PLEASE READ THIS INFORMATION CAREFULLY BEFORE OPERATING YOUR REMINGTON SAFE.

DO NOT LOCK THIS MANUAL OR THE OVERRIDE KEYS IN YOUR SAFE.

- Thank you for choosing a Remington safe to protect your valuables. We are committed to securing, organizing and protecting your most important documents, valuables and keepsakes.
- Your safe is built to last a lifetime. However, please understand that the locking mechanism has precision parts. If you experience ANY difficulty opening or closing your safe DO NOT FORCE THE SAFE OPEN. Doing so may jam the components in the lock, which will require a safe technician to unlock your safe. This causes an inconvenience to you and may lead to a claim denial.
- If you experience problems or challenges with your safe, please contact us. Many issues can be quickly resolved without the product being returned.

Contact Customer Service at cs@saproducts.com or (888) 792-4264

SAFETY

- Safe bodies and doors are extremely heavy thus SA Consumer Products requires a minimum of 2 or 3 people to ensure stability of the safe during installation. Always ensure proper installation, as laid out in this manual, and do not open the door with the safe on an uneven or unstable floor. Ignoring this could result in serious injury or death.

FIREARM STORAGE

- If you choose to utilize this safe to store a firearm always follow proper firearm and local laws.
- SA Consumer Products strongly recommends that you do not store loaded firearms.
- Always follow the firearm safety rules set out by the firearm's manufacturer.
- A Remington safe or any other firearm storage device cannot take the place of other safety procedures including advising children of the dangers of firearms.
- SA Consumer Products and its distributors of the Remington safe do not recommend, suggest, advise, promote, or otherwise condone the ownership or use of firearms. We believe the decision to own or use a firearm is a serious decision that should only be made by an adult who has carefully considered the risks and benefits of such a decision.

Register your safe at www.remingtonsafes.com

By registering your Remington safe we will be able to expedite and address any problems or challenges you may have which would otherwise require a notary letter and proof of payment. You can scan the QR Code to take you directly to the Remington registration page.

REGISTRATION INFORMATION

The information you record onto this page will be required in the event you cannot access the contents of your Remington safe. Please fill out all the required information below and retain for your records and safe keeping.

PLEASE HAVE THIS INFORMATION READY PRIOR TO CALLING FOR TECHNICAL ASSISTANCE AT:

CONTACT CUSTOMER SERVICE AT (888) 792-4264

PURCHASE DATE:

PURCHASE PRICE (BEFORE TAX):

MODEL NUMBER:

SERIAL NUMBER:

RETAILER NAME:

KEY NUMBER (IF APPLICABLE):

2. UNDERSTANDING YOUR SAFE

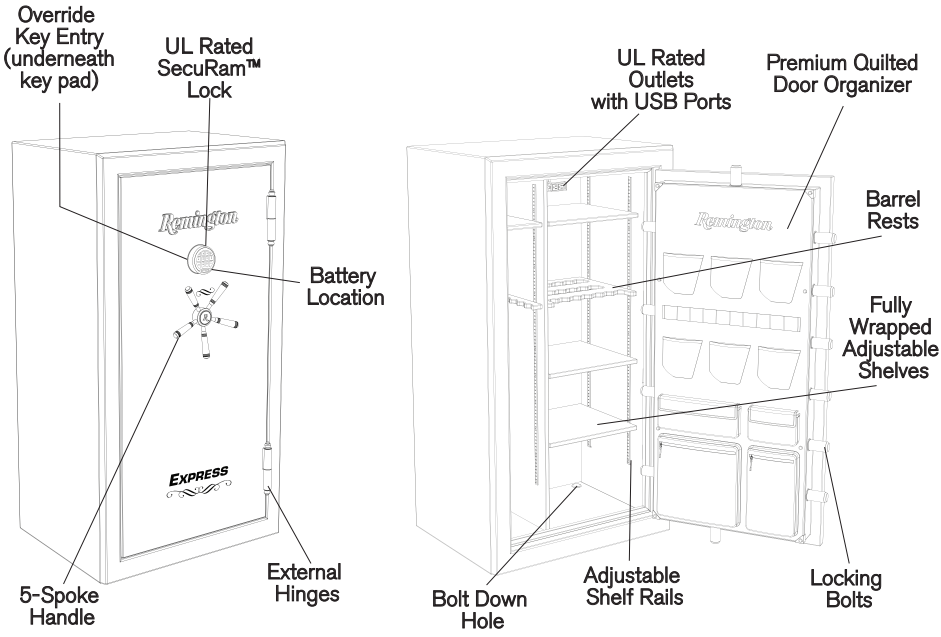

3. UNBOXING

WARNING: SAFES ARE HEAVY AND CAN BE UNSTABLE ON UNEVEN GROUND. PLEASE ENSURE EXTRA CAUTION WHEN DEALING WITH OR MOVING UNSECURED SAFES. WHILE UNBOXING BE SURE TO HAVE A SECOND PERSON HOLD AND STABILIZE THE SAFE TO KEEP IT FROM TIPPING, CAUSING INJURY, AND/OR DAMAGE TO THE SAFE AND SURROUNDING STRUCTURES.

- Remove the packaging. If your safe is still on shipping feet you can simply lift the box up and off the safe once the strapping has been removed. You will want to have someone stabilize the safe when removing the cardboard and other packing material from underneath the safe.

  Before discarding package material, please be certain you have located and saved the "Getting Started Box" located in the front of the honeycomb corrugate front protection panel.

4. INSPECTION

- Make sure to inspect your safe for shipping damage before accepting delivery. If you find any damage, please contact the delivery company (or carrier) immediately.

- Any damage not noted upon delivery must be reported within fifteen (15) days or there will be no recourse. Any noted damage at the time of delivery must be resolved with the delivery company and/or retailer. Shipping damage is not warrantable by SA Consumer Products.

5. INITIAL ENTRY

1. Locate the quick start guide, override key, battery and spoke inside the box on the front of the corrugate safe protective front cover.

   Install the single handle spoke by inserting into one of the threaded openings and twisting clockwise until you feel the spoke fully lock into place.

   Set the provided override key aside in a safe place.

   NOTE: Do not store override keys inside your safe.

2. Locate the battery compartment at the bottom right side of the lock face.

   Release the latch tab of the battery compartment by gently pulling it down, then pull down the battery compartment to insert the 9V battery.

3. Put battery compartment back into the lock face inserting in upward manner until it is in line or level with the cover.

   Push up the latch of the battery compartment until it is tight and secure.

   WARNING: The batteries must be inserted with the correct polarity. Exhausted batteries must be removed from the product and discarded safely. Do not use rechargeable (nickel – cadmium) batteries. Duracell and Energizer batteries are highly recommended.

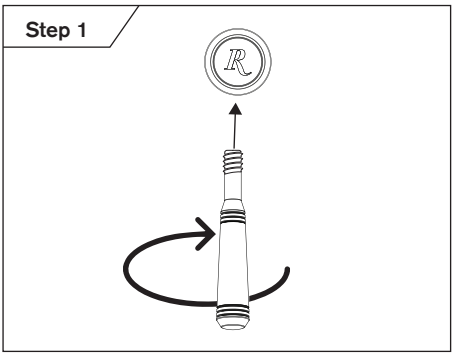

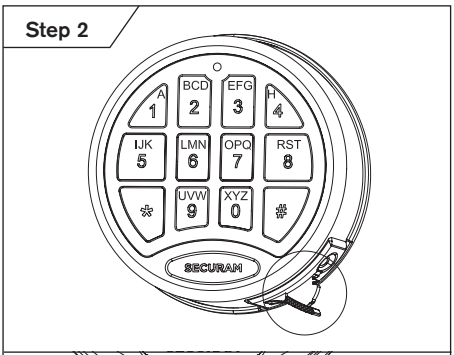

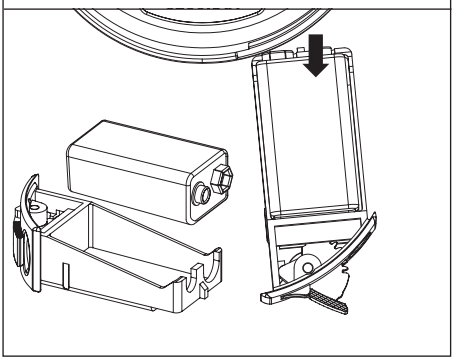

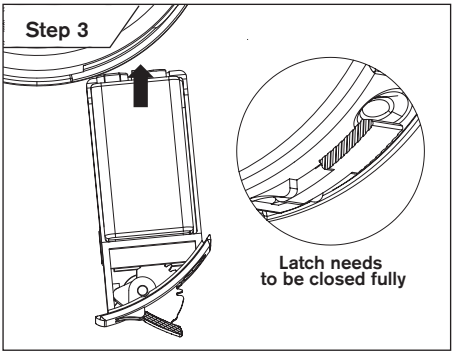

4. Enter the default USER CODE on the keypad. **Default code is: 1-2-3-4-5-6**

   The light at the top of the keypad should light with each digit entered and flash 2X at completion indicating the code was entered correctly and the safe handle can be turned to open the safe.

   NOTE: The # button can be used to clear numbers entered incorrectly.

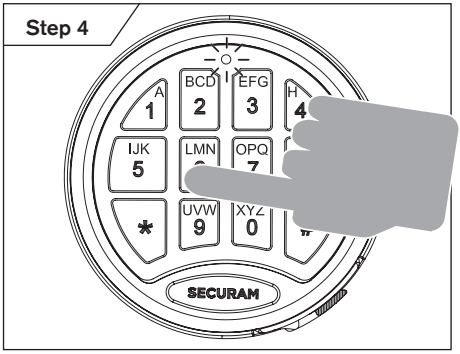

5. Rotate the handle clockwise until the safe door opens.

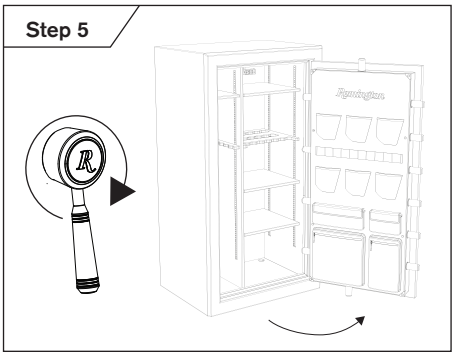

6. Now that your safe is open, you will find a Welcome Box inside your safe. You will find your 4 remaining spokes inside that box.

   Insert each individual spoke into a threaded opening and turn clockwise to install.

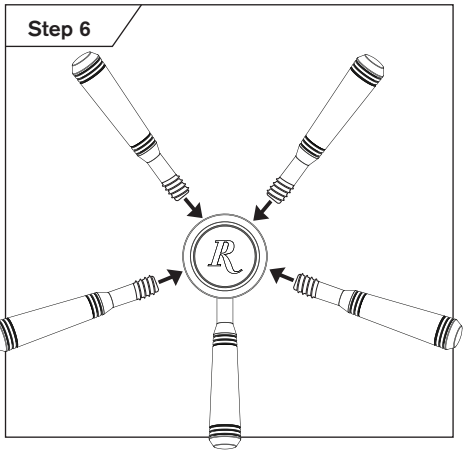

6. USER CODE SET UP

NOTE: It is beneficial read and understand all steps prior to beginning each section.

WARNING: IT IS REQUIRED THAT THE USER CHANGE BOTH THE USER AND MANAGER CODES OF YOUR SAFE. FAILURE TO DO SO IS A POTENTIAL SECURITY RISK.

1. With your safe door still open, press “0” six times on your lock face, you will hear 1 beep and the light will flash 2 times.
2. Enter the existing default code 1-2-3-4-5-6, you will hear 1 beep and the light will flash 2 times.
3. Enter a your new personal 6 digit code, you will hear 1 beep and the light will flash 1 time.
4. Re-Enter your new 6 digit code to confirm, you will hear 2 beeps and the light will flash 1 time.

You can write your new user code here and place in a safe place for reference.

? ? ?

? ? ?

If 3 beeps sound programming was NOT successful and it is necessary to repeat steps 1-4.

NOTE: The Safe lock system automatically relocks after 6 seconds of being opened by a valid code. After 6 seconds a valid code will have to be re-entered.

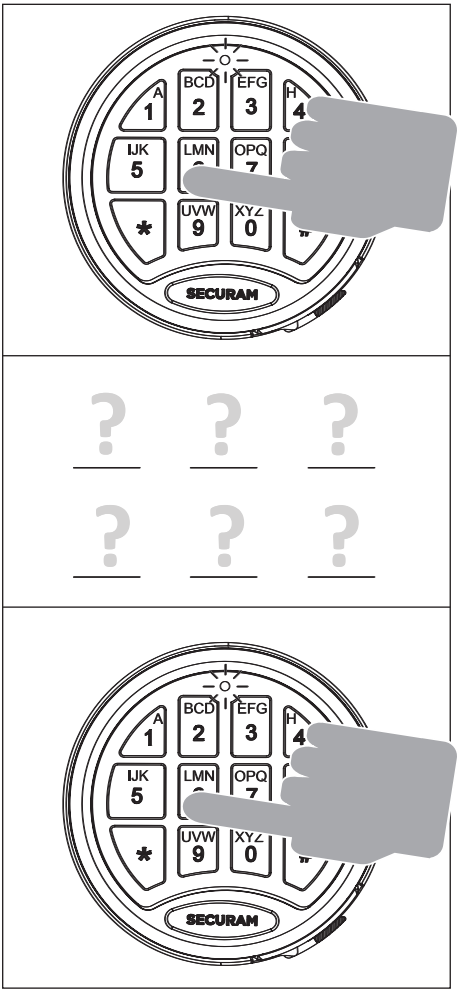

7. MANAGER CODE

Your safe is equipped with the ability to store two 6 digit codes, a Manager Code and a User Code. The Manager Code has the ability to delete the User Code and create a new User Code. The Manager Code can also be used to change the Manager Code to a new 6 digit number. The User Code does not have any abilities other than opening the safe.

7. MANAGER CODE (CONTINUED)

NOTE: It is beneficial read and understand all steps prior to beginning each section.

WARNING: IT IS REQUIRED THAT THE USER CHANGE BOTH THE USER AND MANAGER CODES OF YOUR SAFE. FAILURE TO DO SO IS A POTENTIAL SECURITY RISK.

CHANGING THE MANAGER CODE

1. With your safe door open, press “0” six times to enter Manager Code Edit Mode. You will hear 1 beep and the light will flash 2 times.
2. Enter your current Manager Code, or the default Manager Code (1-1-1-1-1-1). If successful, you will hear 1 beep and the light will flash 2 times.
3. Next, enter your desired new 6 digit Manager Code. You will hear 1 beep and the light will flash 1 time.
4. Enter the same desired new 6 digit Manager Code for the second time, this will confirm your new Manager Code. If the new Manager Code has been successfully accepted, you will hear 2 beeps and the light will flash 1 time.

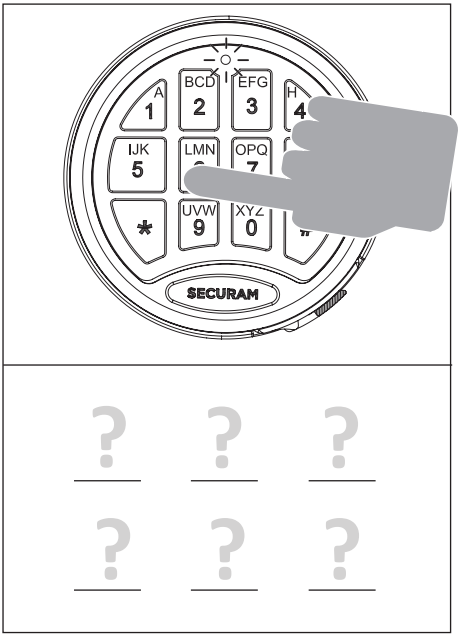

You can write your new manager code here and place in a safe place for reference.

? ? ?

? ? ?

If 3 beeps sound programming was NOT successful and it is necessary to repeat steps 1-4.

NOTE: The Safe lock system automatically relocks after 6 seconds of being opened by a valid code. After 6 seconds a valid code will have to be re-entered.

DELETE A USER CODE WITH MANAGER CODE

1. Enter 6 digit MANAGER Code and HOLD DOWN LAST Digit, you will hear 1 beep and the light will flash 2 times. CONTINUE TO HOLD down until you hear 2 additional beeps.
2. Press "3", you will hear 1 beep and the light will flash 2 times.
3. The USER CODE is now deleted.

CREATE A USER CODE WITH MANAGER CODE

1. Enter 6 digit MANAGER Code and HOLD DOWN LAST Digit, you will hear 1 beep and the light will flash 2 times. CONTINUE TO HOLD down until you hear 2 additional beeps.
2. Press "1", you will hear 1 beep and the light will flash 2 times.
3. Enter a new 6 digit code, you will hear 1 beep and the light will flash 1 time.
4. Re-Enter the new 6 digit code, you will hear 1 beep and the light will flash 1 time.

If 3 beeps sound programming was NOT successful and it is necessary to repeat steps 1-4.

NOTE: The Safe lock system automatically relocks after 6 seconds of being opened by a valid code. After 6 seconds a valid code will have to be re-entered.

DISABLE A USER CODE WITH MANAGER CODE (temporarily suspend user code)

1. Enter 6 digit MANAGER Code and HOLD DOWN THE LAST DIGIT you will hear 1 beep and the light will flash 2 times. CONTINUE TO HOLD down until you hear 2 additional beeps.
2. Press "2", you will hear 1 beep and the light will flash 2 times.
3. The USER CODE is now disabled.

ENABLE A USER CODE WITH MANAGER CODE (if a previous user code was disabled)

1. Enter 6 digit MANAGER Code and HOLD DOWN THE LAST DIGIT, you will hear 1 beep and the light will flash 2 times. CONTINUE TO HOLD down until you hear 2 additional beeps.
2. Press "1", you will hear 1 beep and the light will flash 2 times.
3. The previous USER CODE is now enabled.

8. LOW BATTERY ALERT

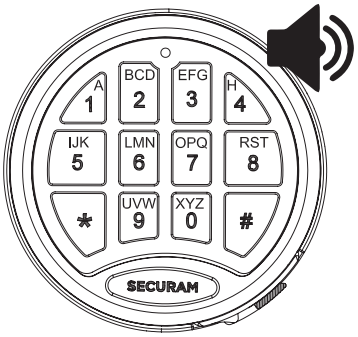

This lock face is equipped to alert you when the batteries are low. If you hear repeated beeping (8 beeps) when unlocking your safe, your battery is low and needs immediate replacement.

It is recommended you replace your battery annually.

NOTE: Duracell or Energizer batteries are highly recommended

9. LOCKOUT MODE / TAMPER PROTECTION



1. After 4 consecutive rejected invalid code entries, your safe will enter lockout mode.

2. The keypad will be deactivated for 5 minutes. You will here a beep in 5 second intervals during the lockout period.

10. USING YOUR OVERRIDE KEY

1. To expose the override keyhole that is under the lock face, firmly grab the lock face and slide up.

   The lock face will slide off two screw heads that are holding it by using a pressure fit.

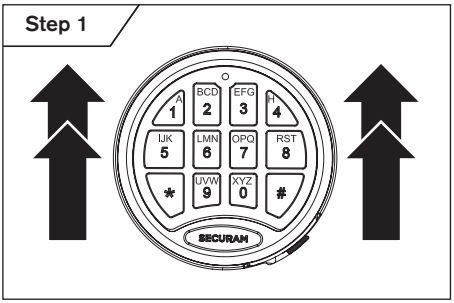

2. Let the lock face gently hang to expose the keyhole. Use the override key to open safe by inserting and turning the key clockwise.

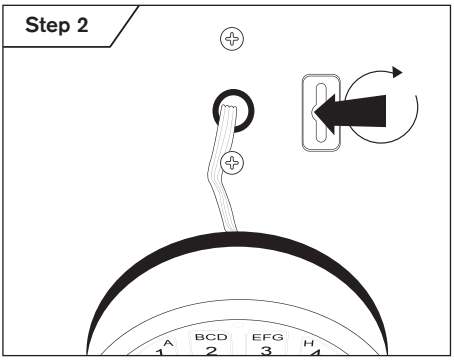

10. USING YOUR OVERRIDE KEY (CONTINUED)

3. To replace lock face, push exposed keypad cable back into safe as far as possible, then align guide holes in back of lock face with 2 metal screw heads on front of safe door.

   Push the lockface in and down to secure the screw heads into the back of lock face guide holes. The lock face should now be in place.

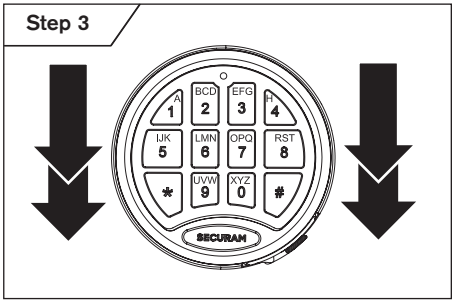

11. PROPER PLACEMENT AND MOVING OF SAFE

WARNING: SAFES ARE VERY HEAVY AND AWKWARD TO HANDLE. PLEASE USE THE UTMOST CARE IN MOVING THE SAFE. UTILIZING A TRAINED PROFESSIONAL WITH PROPER MOVING EQUIPMENT IS HIGHLY RECOMMENDED.
The location of the executive safe is very important and the utmost care should be taken during this consideration.

1. To maximize the fire protection of your safe, we recommend you place the safe in lower levels in your home where fire temperatures are lower and away from highly combustible materials.
2. To maximize burglary protection and stability, securing the safe to the floor is recommended.
3. SA Consumer Products recommends that you store your safe in a closet, office, basement, bedroom or any other location that is convenient for you but out of direct line of sight from prying eyes. The location of the safe is very important.
4. SA Consumer Products requires the safe is secured to the floor to ensure safe does not tip over in case of a flood.

Using a dolly capable of supporting the size and weight of your safe, move the safe to your desired location. Please take all necessary precautions to protect and prevent any damage to your flooring.

HELPFUL: TO DETERMINE WHETHER YOUR SAFE WILL MAKE IT THROUGH DOORWAYS, STAIRS, OR CORNERS, TAKE THE EMPTY SAFE BOX AND SEE IF IT WILL FIT ALL THE WAY THROUGH TO ITS FINAL LOCATION.

5. The safe should be installed adjacent to a side wall with minimal space on either side of the safe. Wherever possible, the safe should be flat against the wall and floor. Remove the baseboard and/or wall trim if necessary.
6. Always ensure the safe is in an isolated and dry area. Never place the safe in direct contact with a wet floor. When installing your safe on a concrete floor, use of a moisture/protective barrier is highly recommended. Failure to do so, or exposing the safe to chemicals or other adverse environments, may void the warranty.
7. If your safe seems unlevel, you may need to shim the bottom of the safe to prevent the door from swinging open too quickly, or closing on itself.

12. KEEPING YOUR SAFE DRY

We recommend placing a moisture/protective barrier between your safe and concrete floor to prevent any moisture, mildew and rust damage to the safe. Installing your safe in a place with climate control (heat in the winter and cooling in the summer) is highly recommended. In areas of high humidity or frequent temperature fluctuations (garages) it is recommended to take appropriate precautions to ward against moisture damage. We strongly encourage the use of an internal dehumidifier and/or desiccants to protect your contents from rust or mildew. Internal dehumidifiers should not be in direct contact with the side or back walls.

13. SHIPPING SKID REMOVAL

WARNING: WHILE REMOVING THE BOLTS FROM THE SKIDS, BE SURE TO HAVE A PERSON HOLD AND STABILIZE THE SAFE TO KEEP IT FROM TIPPING, CAUSING INJURY, AND/OR DAMAGE TO THE SAFE AND SURROUNDING STRUCTURES.

WARNING: BEFORE REMOVING THE SHIPPING SKIDS, MAKE SURE THE DOOR IS CLOSED AND LOCKED. THE DOOR OF YOUR SAFE IS HEAVY AND PRESENTS A SAFETY HAZARD UNTIL THE SAFE IS BOLTED DOWN OR SECURED PROPERLY.

1. Upon receiving your safe, you may find it attached to a shipping skid. The skid is secured from the underside of the safe by four bolts. Remove the four bolts that secure the safe to the skids using a wrench or 3/4" (19mm) socket.
2. With a person stabilizing the safe, carefully tilt the safe to the left and pull the shipping skid on the right side away from the bottom of the safe.
3. With the shipping skid removed from one side of the safe, carefully lower the safe to the floor.
4. Follow the same procedure to remove the remaining shipping skid.

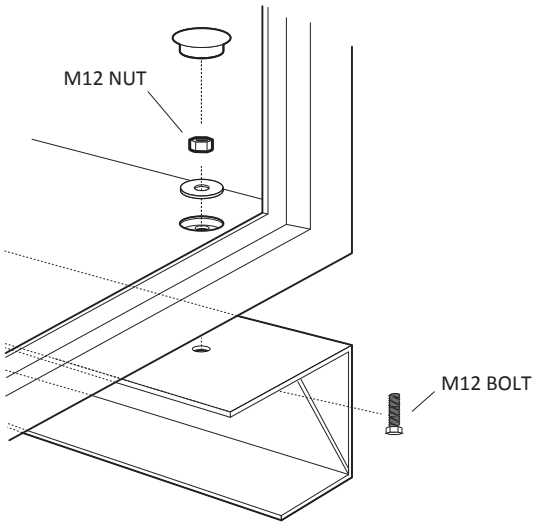

14. SECURING YOUR SAFE

WARNING: YOUR SAFE IS DESIGNED TO SUPPORT ITSELF WHEN THE DOOR IS OPENED. HOWEVER, CAUTION SHOULD BE USED TO AVOID TIPPING. WHILE SECURING YOUR SAFE BE SURE TO HAVE A SECOND PERSON HOLD AND STABILIZE THE SAFE TO KEEP IT FROM TIPPING, CAUSING INJURY, AND/OR DAMAGE TO THE SAFE AND SURROUNDING STRUCTURES. FAILURE TO DO SO WILL COMPROMISE THE SAFETY, SECURITY, AND WARRANTY OF THE SAFE.

TOOLS NEEDED TO BOLT SAFE TO A CONCRETE SURFACE

- DRILL / HAMMER DRILL
- DRILL BIT – 1/2" (for concrete install with provided hardware)
- WRENCH / 11/16" (17MM) SOCKET
- HAMMER
- SAFETY GLASSES
- GLOVES
- OTHER SAFETY EQUIPMENT AS NEEDED

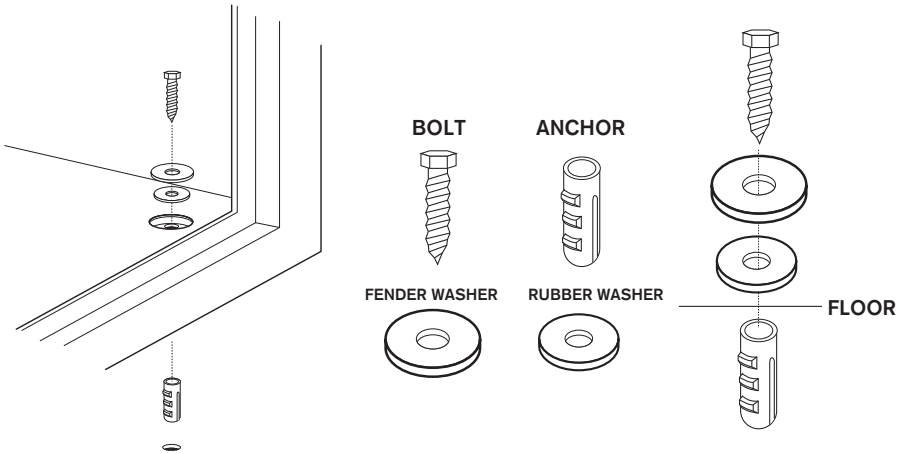

1. Use the hardware provided or consult your hardware retailer for fastening hardware for your particular mounting surface.
2. Open your safe door and locate and remove the four black caps on the safe floor. This will provide access to the factory drilled bolt down holes.
3. To secure your safe to the floor it will first be necessary to drill pilot holes in the floor surface.
4. Drill the appropriate diameter and depth of pilot holes based on the type of hardware being used and the type of floor surface. For the hardware provided (concrete floor installation) we recommend using a hammer drill and 1/2" concrete drill bit to drill the four corresponding holes in the concrete floor.
5. Insert and drive the plastic anchoring plugs into the pilot holes. You may need to use a hammer to fully insert the plugs into the pilot holes.
6. Secure the safe, by threading all 4 anchor bolts through the factory drilled bolt down holes in the bottom of the safe and ratcheting down tight.
   - Make sure the metal washer sits on top of the rubber washer. Tighten the bolt to compress the rubber washer between the safe and metal washer. Failure to do so will allow water to enter the safe in the event of a flood.
7. Replace the four black caps onto the floor of the safe.

15. INTERIOR LIGHTING

This safe comes with proximity based interior lighting installed. When the USB powered internal lighting is plugged into the USB power source, the lighting will function automatically when the door is open.

16. LOCKED OUT OF YOUR SAFE

In the event you have forgotten the security code your primary action will be to use your override keys in order to gain access to your safe and follow the Electronic Lock Security Setup Code instructions, starting at section 10.

If you have lost your backup keys, you will need to contact customer service at the number below. Proof of purchase is required to obtain keys.

CONTACT CUSTOMER SERVICE AT (888) 792-4264

17. LOADING YOUR SAFE

1. Store documents or heat sensitive items in the bottom of the safe for greatest protection against fire damage.
2. Store ammunition separately from valuables.
3. Do not put anything in your safe that will put pressure against the door when it is closed.
4. Select safe models have reinforced shelving, but as a good safety precaution store heavier items either on the floor of the safe, or away from the middle of the shelves.
5. When placing firearms into your safe, make sure they rest securely against the cutouts provided in the barrel rests to prevent accidental tipping when the door is closed.

18. MAINTENANCE

The hinges and internal locking mechanism are permanently lubricated, thus needing no maintenance. Opening the door panel of your safe may void your warranty. Always consult our customer service experts prior to doing so.

LIFETIME WARRANTY

SA Consumer Products, Inc. will repair or replace, at their sole discretion, any Remington gun safe damaged by fire, forced entry, forced attack or natural flood for the lifetime of the original owner.

SA Consumer Products, Inc. will repair or replace, at their sole discretion, any Remington gun safe with defective parts, paint or lock for the lifetime of the original owner.

If SA Consumer Products, Inc. deems a replacement safe is to be sent, they will pay the freight costs to ship the replacement safe to the original owner.

This lifetime warranty is limited to the safe and expressly excludes any loss associated with the contents of the safe.

SA Consumer Products, Inc. reserves the right to receive full evidence of your misfortune, such as a police report and/or homeowners statement of coverage. This warranty is not valid outside of the United States and Canada.

Proof of registration and copy of sales receipt must be on file at the time of claim. Visit our website at remingtonsafes.com to register your safe.

Lifetime warranty only applies to the original owner of the safe.

SA Consumer Products, Inc. shall only be responsible and liable when the safe is used in compliance with the directions specified in your new Remington gun safe owner's manual.

SA Consumer Products, Inc. requires that specific guidelines be followed for repair. The safe will be repaired in-home if possible (to include parts and labor); however, if factory replacement is necessary (SA Consumer Products, Inc.'s sole discretion), the replacement will be shipped freight prepaid, curbside delivery.

This warranty is inclusive and is in lieu of any and all other warranties, express or implied. Specifically excluded are the warranties of merchantability and fitness for a particular purpose. This warranty is limited to the safe itself and/or its value and does not include consequential damages of any kind including, but not limited to, the contents in and of the safe.

remingtonsafes.com