Outdoor Accents®

Avant Collection™

SIMPSON Strong-Tie®

New Collection Offers Design Versatility for Custom Outdoor Living Structures

The Avant Collection™ is the newest addition to Outdoor Accents®, a full line of decorative wood connectors and fasteners from Simpson Strong-Tie. Featuring straight edges and chamfered corners, this new collection offers a clean, timeless design that complements nearly every architectural style. Outdoor Accents hardware accommodates both nominal and rough lumber, giving you great flexibility for designing and building custom outdoor structures.

Key Features

- Clean, simple lines enhance the beauty of your outdoor living area
- Structural strength has been tested and approved to meet stringent building codes for high-wind or seismic conditions
- ZMAX® galvanized steel with a black powder coat provides corrosion protection
- Fastener and patented hex-head washer create decorative bolt-like connections, but install with the ease of a screw and without predrilling

© 2020 Simpson Strong-Tie Company Inc. F-C-OAAVANT20

The Look of a Bolt, the Ease of a Screw

The Outdoor Accents® structural wood screw and hex-head washer provide the decorative appearance of a bolted connection, but are easier and faster to install than through-bolting. The hex-head washer is code listed (IAPMO UES ER-192), and is designed exclusively for fastening Outdoor Accents post bases, T and L straps and angles, flat straps, gable plates and deck joist ties in both the Avant Collection™ and Mission Collection®.

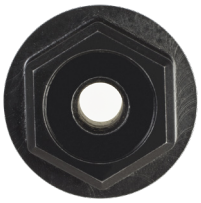

The Outdoor Accents structural screw and patented, code-listed hex-head washer look like a bolted connection, but install like a screw. The structural screw and washer are both sold separately.

Light Joist Hanger

Joist Size	Model No.	Ga.	Dimensions (in.)			Fastener Qty.		DF/SP Allowable Loads (lb.)			
			W	H	B	Header	Joist	Uplift (160)	Floor (100)	Snow (115)	Roof (125)
2x4	APLH24	14	1 9/16	3 5/16	1 7/8	4	2	315	690	795	865
	APLH24R		2 1/16	3 1/16							
2x6 or 2x8	APLH26	14	1 9/16	5 1/8	1 7/8	6	4	900	1,040	1,195	1,300
	APLH1.75-6		1 13/16	5							
	APLH26R		2 1/16	4 7/8							
2x10 or 2x12	APLH210	14	1 9/16	8	1 7/8	10	6	1,345	1,730	1,990	2,165
	APLH1.75-10		1 13/16	7 7/8							
	APLH210R		2 1/16	7 3/4							

1. Uplift loads have been increased for earthquake or wind loading with no further increase allowed. Reduce where other loads govern.
2. All fasteners are Outdoor Accents® SD10112DBB. Fasteners sold separately.

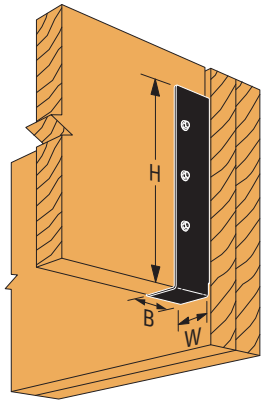

APLH210

Heavy Joist Hanger

Joist Size	Model No.	Ga.	Dimensions (in.)			Fasteners Qty.		DF/SP Allowable Loads (lb.)			
			W	H	B	Header	Joist	Uplift (160)	Floor (100)	Snow (115)	Roof (125)
4x6 or 4x8	APHH46	12	3 9/16	5 1/8	3	6	2	1,165	2,280	2,280	2,280
	APHH46R		4 1/16	4 7/8							
6x10 or 6x12	APHH610		5 1/2	8 1/2	3	14	6	4,140	5,880	6,760	7,350
	APHH610R		6	8 1/4							

1. Uplift loads have been increased for earthquake or wind loading with no further increase allowed. Reduce where other loads govern.
2. All fasteners are Simpson Strong-Tie SDS25300 to the header and Outdoor Accents SDWS22312DBB with STN22 hex-head washer to the joist. Fasteners sold separately.

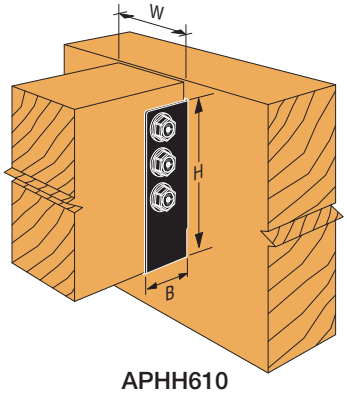

APHH610

Deck Joist Tie

Model No.	Ga.	Dimensions (in.)			Fastener Qty. and Length		DF/SP Allowable Down Loads (lb.)	
		S	W	H	Column	Joist	Floor (100)	Roof (125)
APVDJT2-4	12	1 1/2	3	10	(2) 3 1/2"	(2) 5 1/2"	1,870	2,340
APVDJT1.75-4	12	1 3/4	3	9 3/4	(2) 3 1/2"	(2) 5 1/2"	1,870	2,340
APVDJT2R-4	12	2	3	9 1/2	(2) 3 1/2"	(2) 5 1/2"	1,870	2,340
APVDJT2-6	12	1 1/2	5	8 1/2	(2) 3 1/2"	(2) 5 1/2"	1,870	2,340
APVDJT1.75-6	12	1 3/4	5	8 1/4	(2) 3 1/2"	(2) 5 1/2"	1,870	2,340
APVDJT2R-6	12	2	5	8	(2) 3 1/2"	(2) 5 1/2"	1,870	2,340

1. Roof loads are 125% of floor loads unless limited by other criteria. Floor loads may be adjusted for load durations according to the code, provided they do not exceed those in the roof column.
2. Loads are per part. APVDJT1.75 model loads for Western Red Cedar are 1,430 lb. floor (100) and 1,790 lb. roof (125).
3. Joist fastener is an Outdoor Accents® SDWS22512DBB structural wood screw inserted through an STN22 washer. Column fastener is an SDWS22312DBB structural screw inserted through an STN22 washer. Fasteners sold separately.

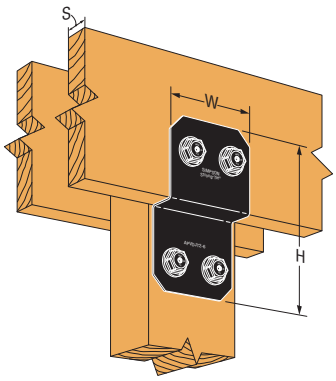

APVDJT2-6

© 2020 Simpson Strong-Tie Company Inc. F-C-OAAVANT20

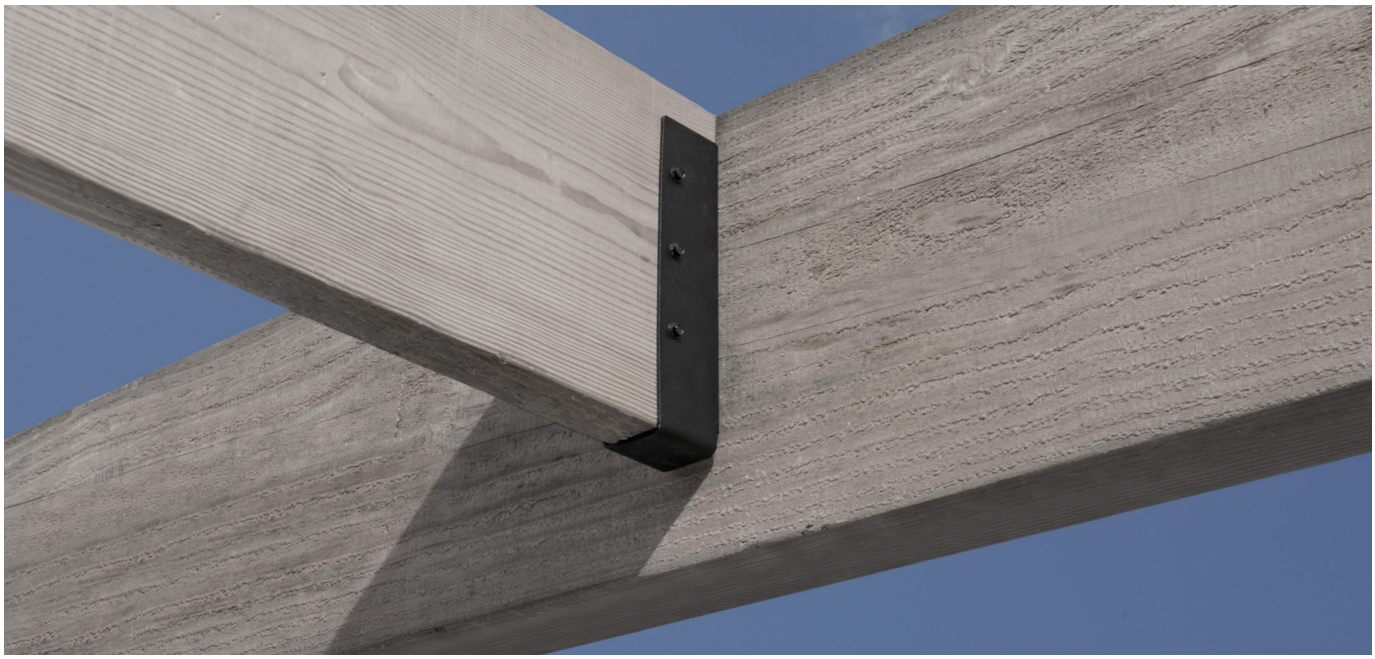

Attach Joists with **Concealed Flange Hangers**

The light joist hangers connect 2x joists to beams. These concealed-flange hangers feature straight edges and provide a cleaner-looking installation for joist connections. Available in a range of sizes, APLH hangers install easily with the Outdoor Accents® connector screw.

Support Large Beams with **Heavy Hangers**

The heavy concealed hanger connects 4x or 6x beams to girders or posts. The APHH installs with the Strong-Drive® SDS Heavy-Duty Connector screw and with the Outdoor Accents structural wood screw and hex-head washer.

Secure Joists with **Ties**

The deck joist tie attaches 2x joists to the side of 4x or larger support posts. It installs quickly and easily with the Outdoor Accents structural wood screw and hex-head washer.

© 2020 Simpson Strong-Tie Company Inc. F-C-OAAVANT20

Gable Plates

Model No.	Ga.	Roof Pitch	Angle (deg.)	Dimensions (in.)			Fastener Qty.			DF/SP Allowable Loads (lb.)
				W	H	L	Beam	Center Column	Angled Struts	Uplift (160)
APVGP612	12	6:12	27°	5	19¾	34½	16	8	16	3,925
APVGP812		8:12	34°							
APVGP1212		12:12	45°							

1. Allowable loads have been increased for wind or earthquake loading with no further increase allowed. Reduce where other loads govern.
2. Connector table loads and fastener quantities are listed for two parts. For single part installations, use half the listed values.
3. Uplift loads apply to the connection between the center vertical post and the beam.
4. All fasteners are Outdoor Accents® SDWS22312DBB inserted through an STN22 washer. Quantities listed are for two parts. Fasteners sold separately.

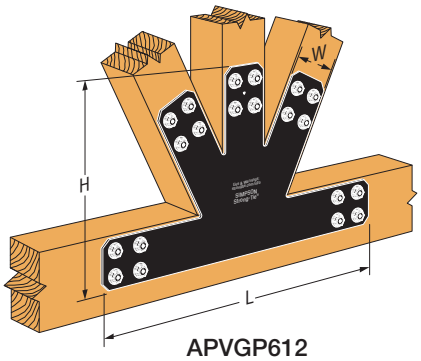

APVGP612

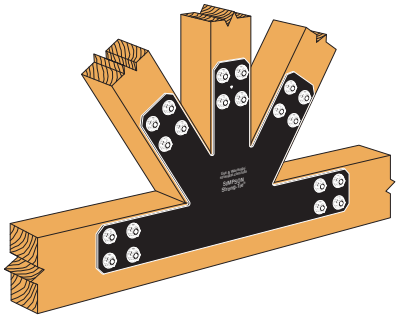

APVGP812

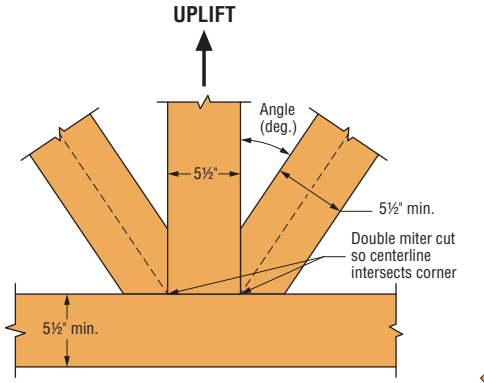

***Note:** 12:12 will have equal cuts. Other sizes will have unequal cuts*

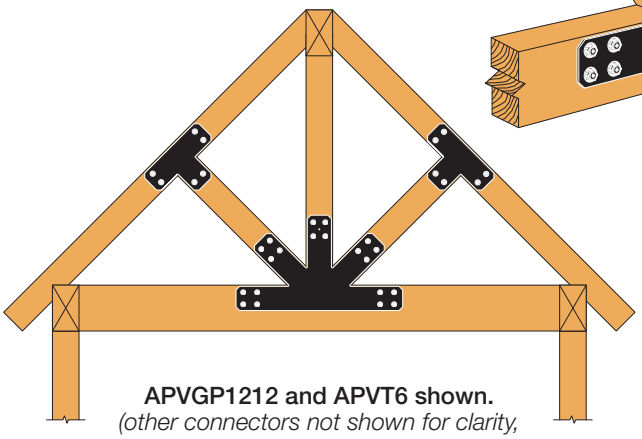

APVGP1212 and APVT6 shown.
(other connectors not shown for clarity, connections and roof pitch designed by others.)

Beam-to-Column Ties and Flat Straps

Model No.	Ga.	Dimensions (in.)			Fastener Qty.		DF/SP Allowable Loads (lb.)	
		W	L	H	Column	Beam	Uplift (160)	F_1 (160)
APVL4	12	3	8¼	8¼	2	4	1,155	670
APVL6	12	5	10½	10½	4	6	1,905	1,340
APVT4	12	3	13½	8¼	2	4	1,330	1,015
APVT6	12	5	16	10½	4	8	2,130	1,425
APVST412	12	3	11¼	—	—	8	850	—
APVST610	12	5	9¾	—	—	8	1,505	—

1. Allowable loads have been increased for wind or earthquake loading with no further increase allowed. Reduce where other loads govern.
2. Connector table loads and fastener quantities are listed for two parts. For single part installations, use half the listed values.
3. All fasteners are Outdoor Accents SDWS22312DBB structural wood screws inserted through an STN22 washer. Fasteners sold separately.

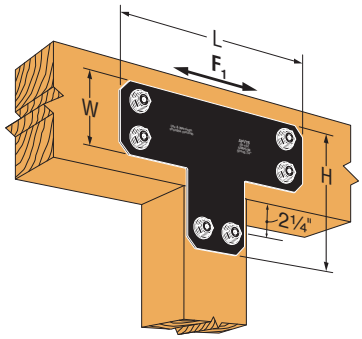

APVT6

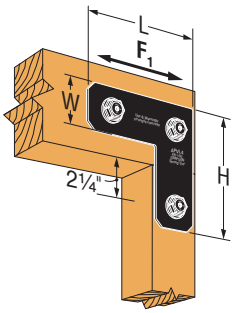

APVL4

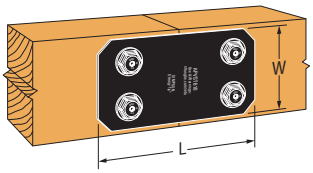

APVST610
(APVST412 similar)

© 2020 Simpson Strong-Tie Company Inc. F-C-OAAVANT20

Add Style with **Gable Plates**

Outdoor Accents® gable plates add decorative flair and strength to any outdoor living space. They provide reinforcement when you're connecting a wood beam to three angled wood braces. Three sizes are available, with the angled braces at 6:12 pitch (27°), 8:12 pitch (34°) and 12:12 pitch (45°). Gable plates are easily installed with Outdoor Accents structural wood screws and hex-head washers.

Connect Beams with **Flat Straps**

This strap works for lumber in both nominal and rough sizes. It can be used to connect two beams together or added to any project as a decorative accent.

Connect Beam to Columns with **Strap Ties**

The flat T and L strap ties bring decorative flair and structural strength to your outdoor living space or even an indoor project. They provide reinforcement for connections where two pieces of lumber intersect at a 90° angle. These strap ties are designed to accommodate multiple lumber sizes and to be installed with Outdoor Accents structural wood screws and hex-head washers.

© 2020 Simpson Strong-Tie Company Inc. F-C-OAAVANT20

Heavy Angles

Model No.	Ga.	Dimensions (in.)			Fastener Qty.		DF/SP Allowable Loads (lb.)	
		L	W_1	W_2	Column	Beam	Uplift (160)	F_1 (160)
APVA4	12	3	3¼	3	2	2	710	1,220
APVA6	12	5	3¼	3	4	4	1,350	1,985

1. Allowable loads have been increased for wind or earthquake loading with no further increase allowed. Reduce where other loads govern.
2. Connector table loads and fastener quantities are listed for two parts. For single part installations, use half the listed values.
3. All fasteners are Outdoor Accents® SDWS22312DBB structural wood screws inserted through an STN22 washer. Fasteners sold separately.

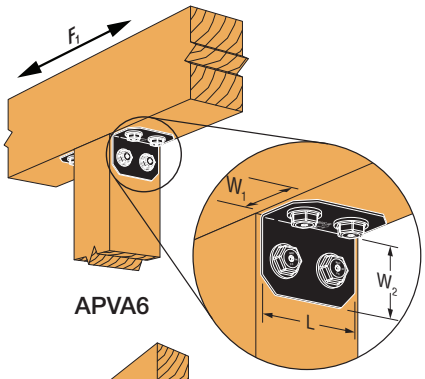

APVA6

Light Rafter Tie

Model No.	Ga.	Dimensions (in.)			Fastener Qty.		DF/SP Allowable Loads (lb.)	
		L	W_1	W_2	Column	Beam	Uplift (160)	F_1 (160)
APVA21	14	1⅜	2	1½	1	1	200	120

1. Allowable loads have been increased for wind or earthquake loading with no further increase allowed. Reduce where other loads govern.
2. Allowable loads are for a single part.
3. All fasteners are Outdoor Accents SD10112DBB connector screws. Fasteners sold separately.

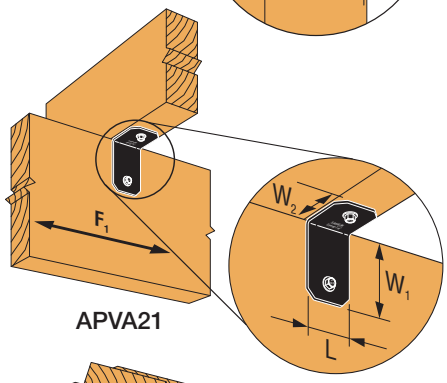

APVA21

Post Base

Model No.	Ga.		Dimensions (in.)			Fastener Qty.		DF/SP Allowable Loads (lb.)	
	Base	Strap	L	W	H	Column	Anchor	Uplift (160)	Down (100)
APVB44	16	12	3	3⁹⁄₁₆	6¾	4	(1) ⅝"	1,035	6,725
APVB44R	16	12	3	4¹⁄₁₆	6½	4	(1) ⅝"	1,035	6,725
APVB66	12	12	5	5½	6¹³⁄₁₆	4	(1) ⅝"	1,260	11,450
APVB66R	12	12	5	6	6⁹⁄₁₆	4	(1) ⅝"	1,260	11,450
APVB88	14	12	7	7½	9⅞	8	(2) ⅝"	2,670	22,255
APVB88R	14	12	7	8	9⅝	8	(2) ⅝"	2,670	22,255
APVB1010	14	12	9	9½	9¾	8	(2) ⅝"	2,365	23,725
APVB1010R	14	12	9	10	9½	8	(2) ⅝"	2,365	23,725

1. Uplift loads have been increased for wind or earthquake loading with no further increase allowed. Reduce where other loads govern.
2. Downloads may not be increased for short-term loading.
3. Specifier is to design concrete and anchorage for uplift loads.
4. Downloads shall be reduced where limited by capacity of the post.
5. All column fasteners are Outdoor Accents SDWS22312DBB structural wood screws inserted through an STN22 washer. Fasteners sold separately.
6. Column bases do not provide adequate resistance to prevent members from rotating about the base and therefore are not recommended for installations that lack top support (such as fences or unbraced carports).

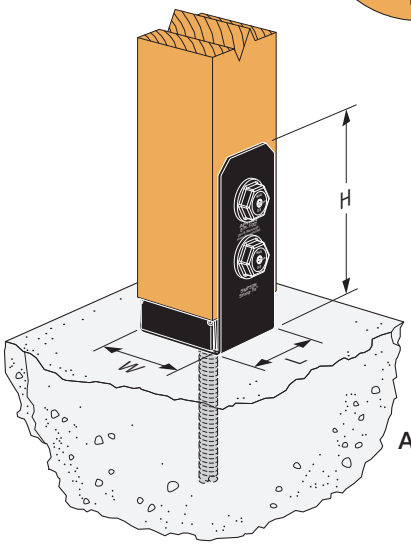

APVB44

Decorative Side Plates

Model No.	Ga.	Dimensions (in.)		Fastener Qty.
		W	H	Column
APVB44DSP	12	3	6½	4
APVB66DSP		5	6⁹⁄₁₆	
APVB88DSP		7	9⅝	8
APVB1010DSP		9	9½	

1. All fasteners are Outdoor Accents SDWS22312DBB inserted through an STN22 washer. Quantities listed are for two parts. Fasteners sold separately.
2. Install top of decorative side plates flush to top of post base strap legs. Decorative side plates installed on APVB post bases will be raised up ¼" from the bottom of the post base, while installations on rough models will not.

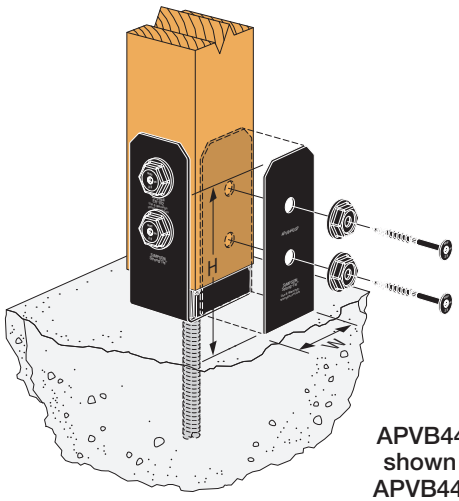

APVB44DSP shown with APVB44 post base

© 2020 Simpson Strong-Tie Company Inc. F-C-OAAVANT20

Strengthen Connections with **Angles** and **Ties**

Outdoor Accents® angles tie together beams, rafters and more. These angles make structural connections between beams and posts stronger and provide consistent, strong corners for a variety of outdoor projects.

Start Strong with **Post Bases**

Outdoor Accents post bases secure wood columns to concrete, while providing a 1" standoff height that meets building code requirements and helps reduce decay. These bases are available for lumber in both nominal and rough sizes.

Complete Bases with **Side Plates**

Outdoor Accents decorative side plates attach to the bottom of a post or column to give a symmetrical finished look to an installed post base. Side plates are purchased separately from the post base and are optional.

© 2020 Simpson Strong-Tie Company Inc. F-C-OAAVANT20

Outdoor Accents® Structural Wood Screw with Hex-Head Washer

Model No.	Size (in.)	Thread Length (in.)	Allowable Shear Loads (lb.)					
			2x Wood Side Member			12-Ga. Steel Side Member		
			DF/SP	SPF/HF	Western Cedar	DF/SP	SPF/HF	Western Cedar
SDWS22312DBB and STN22	0.22 x 3½	2	235	192	179	470	385	320
SDWS22512DBB and STN22	0.22 x 5½	2¾	465	430	395	640	495	425

1. Allowable loads are for connections between two members with full screw thread penetration into the main member.
2. Allowable loads are shown at a wood load duration factor of C_D = 1.0. Loads may be increased for load duration per the building code up to a C_D = 1.6. Tabulated values must be multiplied by all applicable NDS adjustment factors.
3. Minimum spacing, edge, and end distance requirements are per IAPMO-UES ER-192.
4. Loads are based on installation into the side grain of the wood with the screw axis perpendicular to the face of the member.

SDWS22312DBB with STN22

Outdoor Accents Connector Screw

Model No.	Size (in.)	Thread Length (in.)	DF/SP Allowable Loads (lb.)		SPF/HF Allowable Loads (lb.)	
			Shear Steel Side Plate 20 ga.–12 ga. (lb.)	Withdrawal (lb./in.)	Shear Steel Side Plate 20 ga.–12 ga. (lb.)	Withdrawal (lb./in.)
SD10112DBB	#10 x 1½"	1	173	173	138	122

1. Allowable loads are shown at a wood load duration factor of C_D = 1.0. Loads may be increased for load duration per the building code up to a C_D = 1.6. Tabulated values must be multiplied by all applicable NDS adjustment factors.
2. Withdrawal loads and steel-side-plate shear loads are based on testing per ICC-ES AC233.
3. Withdrawal loads are based on penetration of the screw's entire thread length into the main member.
4. Visit **strongtie.com** for wood-to-wood shear values and wood-side-plate details.
5. Fasteners sold separately.

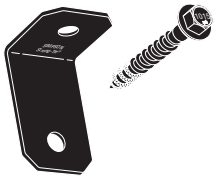

SD10112DBB with APVA21

Outdoor Accents® Structural Wood Screw – Wood to Wood

Model No.	Size (in.)	Thread Length (in.)	Allowable Shear Loads (lb.)			Allowable Withdrawal Loads (lb./in.)		
			2x Wood Side Member			DF/SP	SPF/HF	Western Cedar
			DF/SP	SPF/HF	Western Cedar			
SDWS22312DBB	0.22 x 3½	2	255	190	225	164	151	142
SDWS22512DBB	0.22 x 5½	2¾	405	405	230	214	187	

1. Allowable loads are for connections between two members with full screw thread penetration into the main member.
2. Allowable loads are shown at a wood load duration factor of C_D = 1.0. Loads may be increased for load duration per the building code up to a C_D = 1.6. Tabulated values must be multiplied by all applicable NDS adjustment factors.
3. Minimum spacing, edge, and end distance requirements are per IAPMO-UES ER-192.
4. Loads are based on installation into the side grain of the wood with the screw axis perpendicular to the face of the member.

Decorative Washer

Model No.	Ga.	Hole Dia. (in.)	W (in.)
APVDW56	12	9⁄16	3

1. Fastener is SDWS22312DBB inserted through an STN22 washer.

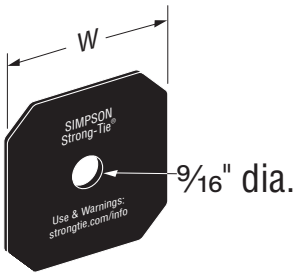

APVDW56

For additional Outdoor Accents accessories, visit strongtie.com/avant

© 2020 Simpson Strong-Tie Company Inc. F-C-OAAVANT20

Finish Installations Faster with **Structural Wood Screws**

The Outdoor Accents® structural wood screw reduces installation time by driving easily without predrilling. Combined with the patented, load-rated hex-head washer, it delivers the decorative appearance of a bolted connection. Both sold separately.

Fasten Connections Easily with **Connector Screws**

Designed for installation with the Outdoor Accents APVA21 90˚ angle and light joist hangers, the connector screw's black finish accents any outdoor living project. The sharp point of the screw enables fast starts, and its patented serrated threads reduce torque for improved drivability.

Accent Connections with **Decorative Washers**

The APVDW56 decorative washer installs easily with the structural wood screw and hex-head washer combination and can be used in a variety of wood-to-wood connections.

© 2020 Simpson Strong-Tie Company Inc. F-C-OAAVANT20

Outdoor Accents®

Avant Collection™

SIMPSON Strong-Tie®

Fasteners

Post Bases

Angles

Straps

Ties

Hangers

Gable Plates

Model No.	Description	Master Carton Qty.
Fasteners		
STN22-R8	Hex-head washer 8 pc.	10
STN22-R24	Hex-head washer 24 pc.	6
SDWS22312DBBRC12	3 ½" structural wood screw 12 pc.	10
SDWS22312DBB-R50	3 ½" structural wood screw 50 pc.	6
SDWS22512DBBRC12	5 ½" structural wood screw 12 pc.	10
SD10112DBBR50	#10 x 1 ½" connector screw 50 pc.	5
Connectors		
APVB44	4x4 post base for nominal lumber	8
APVB44R	4x4 post base for rough sawn lumber	8
APVB66	6x6 post base for nominal lumber	6
APVB66R	6x6 post base for rough sawn lumber	6
APVB88	8x8 post base for nominal lumber	4
APVB88R	8x8 post base for rough sawn lumber	4
APVB1010	10x10 post base for nominal lumber	2
APVB1010R	10x10 post base for rough sawn lumber	2
APVB44DSP	(2) 4x4 post base decorative side plates	8
APVB66DSP	(2) 6x6 post base decorative side plates	10
APVB88DSP	(2) 8x8 post base decorative side plates	5
APVB1010DSP	(2) 10x10 post base decorative side plates	1
APVA4	4x heavy angle	12
APVA6	6x heavy angle	12
APVA21	2x light rafter tie	90
APVL4	4x L strap	8
APVL6	6x L strap	8
APVT4	4x T strap	8
APVT6	6x T strap	8
APVST412	4x12 flat strap	8
APVST610	6x10 flat strap	8
APVDJT2-4	4x deck-joist tie	24
APVDJT1.75-4	4x- 1.75" deck-joist tie	24
APVDJT2R-4	4x rough deck-joist tie	24
APVDJT2-6	6x deck-joist tie	12
APVDJT1.75-6	6x- 1.75" deck-joist tie	12
APVDJT2R-6	6x rough deck joist tie	12
APLH24	2x4 light joist hanger	12
APLH24R	2x4 rough light joist hanger	12
APLH26	2x6 or 2x8 light joist hanger	24
APLH26R	2x6 or 2x8 rough light joist hanger	24
APLH210	2x10 or 2x12 light joist hanger	12
APLH210R	2x10 or 2x12 rough light joist hanger	12
APHH46	4x6 or 4x8 heavy hanger	2
APHH46R	4x6 or 4x8 rough heavy hanger	2
APHH610	6x10 or 6x12 heavy hanger	2
APHH610R	6x10 or 6x12 rough heavy hanger	2
APVGP612	Gable Plates 6:12 pitch	2
APVGP812	Gable Plates 8:12 pitch	2
APVGP1212	Gable Plates 12:12 pitch	2
APVDW56	Decorative washer	24

This flier is effective until June 30, 2022, and reflects information available as of March 1, 2020.
This information is updated periodically and should not be relied upon after June 30, 2022.
Contact Simpson Strong-Tie for current information and limited warranty or see strongtie.com.

© 2020 Simpson Strong-Tie Company Inc. • P.O. Box 10789, Pleasanton, CA 94588

F-C-OAAVANT20 3/20 exp. 6/22

(800) 999-5099
strongtie.com