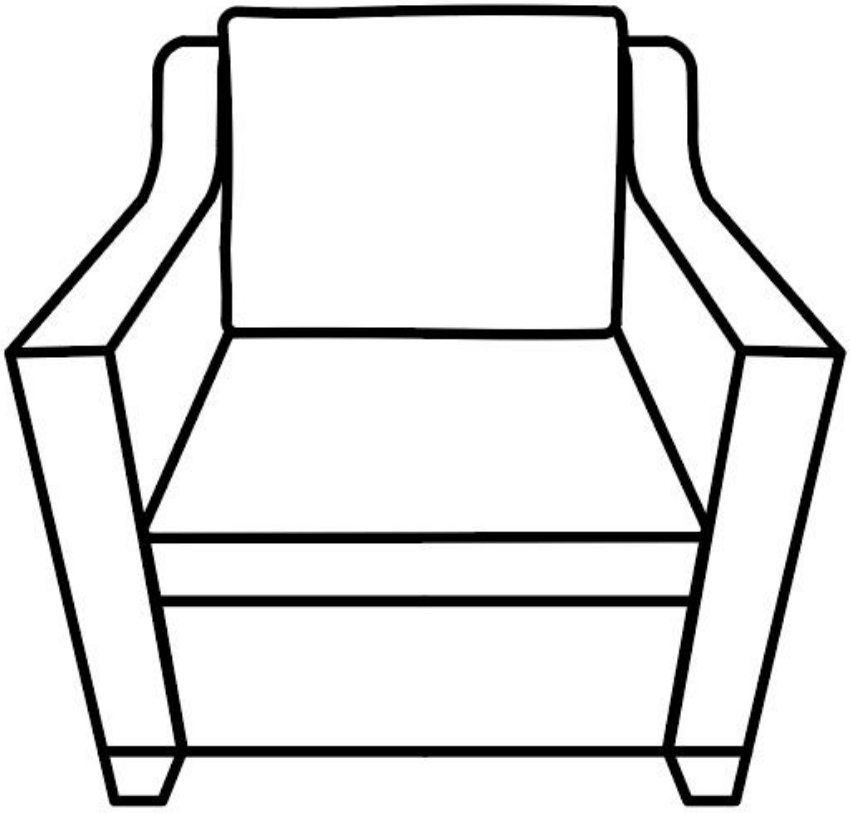

INSTRUCTION MANUAL

Patio Wicker Chair

IF YOU PURCHASED THE CHAIR ONLINE AND HAVE ANY QUESTIONS OR CONCERNS
PLEASE CONTACT US
WITH EMAIL OR TEXT
EMAIL: hiwarrantyservice@outlook.com
TEXT: +1 628-263-4608

WARNING:

Proper use of the chair is for single person seating only. The chair is not to be used for standing purposes and will not function as a stool or step-ladder. Use on even surfaces only. Chair tested for use at weight of 300lb (136.4kg). Improper use of this product or failure to use as directed may result in injury. Not intended for commercial use.

IMPORTANT:

Please read all the instructions and warnings before assembling. In order to make the whole product adjust to the best, please install all the screws on the product before fully tighten, and note to put the washer to the screw before puting the screw into the screw hole.

SAFETY INFORMATION:

· Keep all children and pets away from assembly area. Children and pets should be supervised when they are in the area of the product construction.

· Keep assembly area at leat 6 feet from any obstruction such as a fence, garage, house, overhanging branches, laundry line or electrical wires.

· Some parts may contain sharp edges. When assembling and using this product, basic safety precautions should always be followed to reduce the risk of personal injury and damage to the product. Please read all instructions before assembly and use.

· Check all bolts for tightness before use. IMPORTANT - check and tighten bolts ofen to keep them secure!

· The chair is not to be used for standing purposes and will not function as a stool or step-ladder. Use on even surfaces only.

· The chair use at wight of 300lb (136.4kg). Improper use of this product or failure to use as directed may result in injury. Not intended for commercial use.

CARE & MAINTENANCE :

· STAIN RESISTANT CUSHIONS CARE : KEEP THE CUSHIONS IN STORAGE IN RAINING DAY.

· SPILLS: Immediately wipe up the spill using a white damp cloth. Repeat process if necessary until stain is gone. Allow cushion to air dry.

· FABRIC CARE: Hand wash cold, non-chlorine bleach when needed, lay flat to dry. Cool iron if necessary. Do not dry clean.

· RESIN WICKER PRODUCT CARE: Before using, clean the product completely with a soft dry towel. When not in use, wipe free of any dirt or loose objects, wash with a mild solution of soap and water, rinse thoroughly and dry completely. Do not use strong detergent or abrasive cleaners. Over time nuts and bolts can loosen. Occasinally, check nuts and bolts on all chairs and tables, re-tighten if necessary.

Assembly Instructions

A	B	C	D
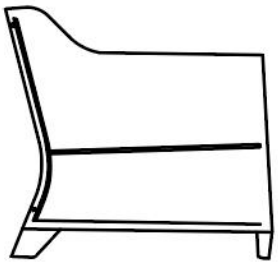	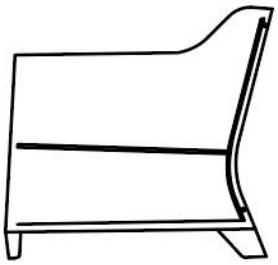	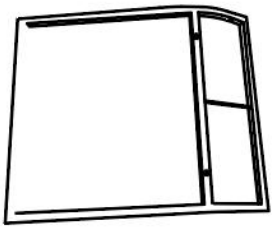	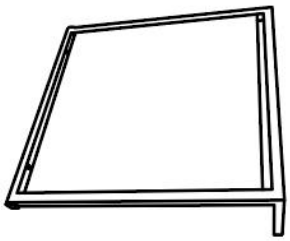

E	F	G	H
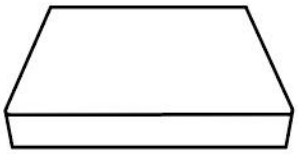	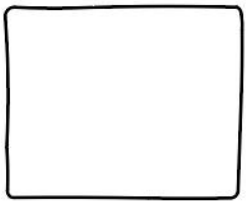	 M6*40（4PC）	 Ø16*Ø6.5*1（10PC）

I	J		
 4#（1PC）	 M6*35（6PC）		

1. Secure chair arm (B) to chair back (C) with 2 washers (H) and 2 screws (G&J) by using allen wrench (I). Do not tighten all screws now.

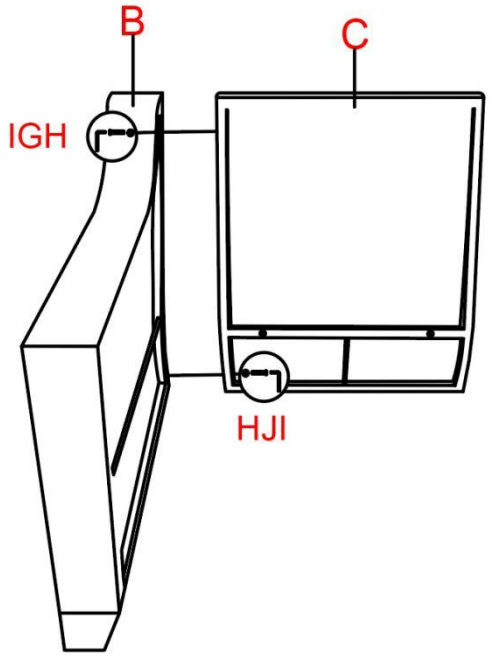

2. Secure chair arm (A) to chair back (C) with 2 washers (H) and 2 screws (G&J) by using allen wrench (I). Do not tighten all screws now.

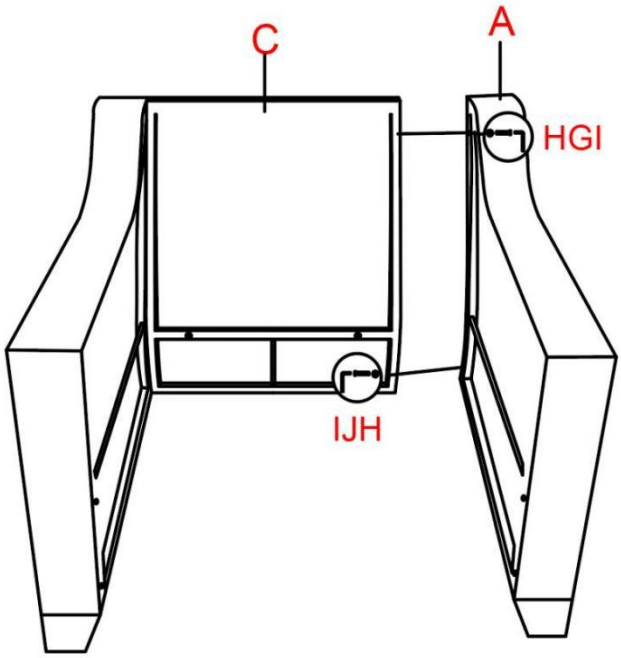

3. Secure chair seat (D) to chair arm (A&B) with 4 washers (H) and 4 screws (J) by using allen wrench (I). Do not tighten all screws now.

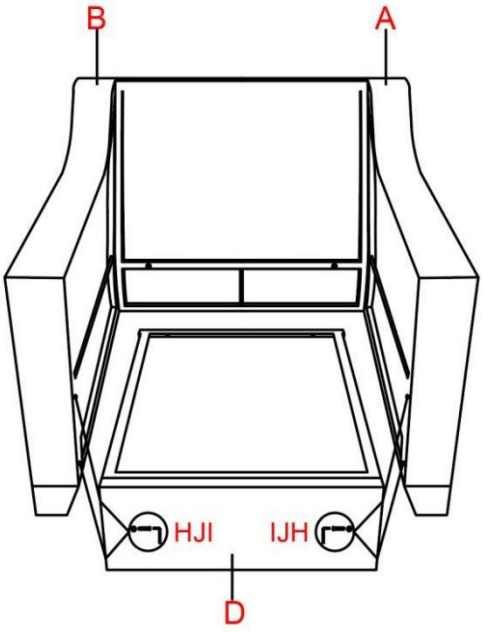

4. Secure chair seat (D) to chair back (C) with 2 washers (H) and 2 screws (G) by using allen wrench (I). Fully tighen all screws now. Put seat and back cushion (E&F) onto chair and now it is ready to use.

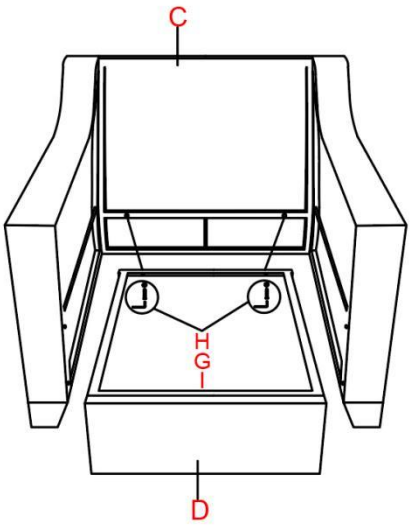

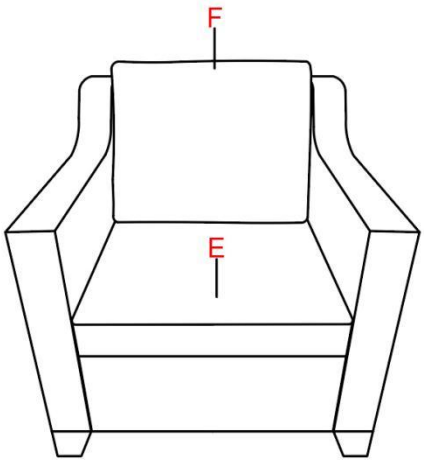

Email: hiwarrantyservice@outlook.com
TEXT: 1 628-263-4608