Installation & Assembly Instructions

This symbol on the product means the product is listed by Underwriters Laboratories, Inc.

ROUND TYPE B GAS VENT

Model E - Sizes 3" through 6"
Model R - Sizes 7" through 30"

OVAL GAS VENT - Model O

Size 4" - Type B, Type B 2x4, Type BW
Size 5" - Type B, Type B 2x4
Size 6" - Type B

GAS VENT AND ACCESSORIES ARE FOR USE ONLY WITH LISTED CATEGORY 1 GAS-FIRED APPLIANCES OR APPLIANCES LISTED FOR USE WITH TYPE B GAS VENT.*

GAS VENT AND ACCESSORIES ARE NOT TO BE USED WITH INCINERATORS OR WITH APPLIANCES BURNING SOLID OR LIQUID FUELS.**

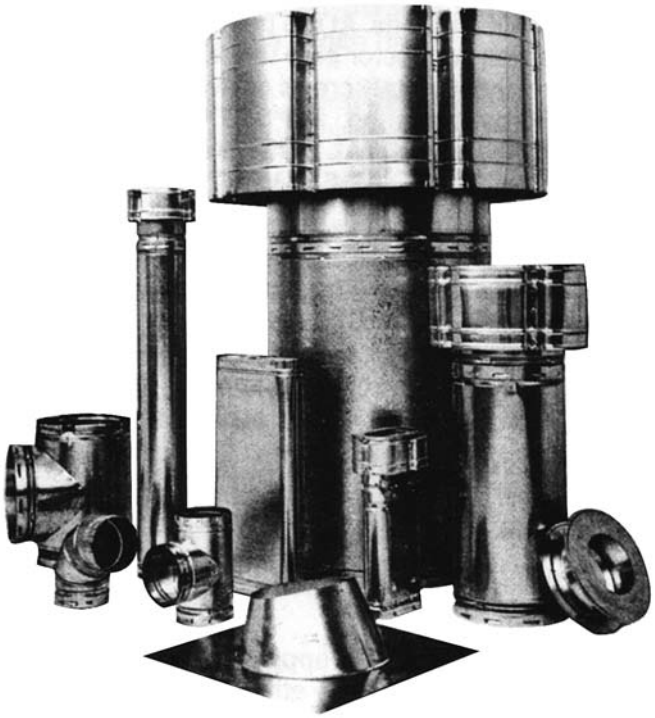

Vent sizing and installation are to be made in accordance with all applicable local building codes. For further information, please consult the National Fuel Gas Code (NFPA 54) or CSA-B149.1 the Canadian Fuel Gas Installation Code.

USAGE

Gas Vent and fittings are intended to form a continuous passageway from the gas appliance to the termination of the vent above the roof, including the vent cap.

*Model E and Model R are listed to UL441 and CAN/ULC-605. Model O is listed to UL441 and is not available in Canada.
Category 2, 3 and 4 gas-fired appliances must use venting materials specified by appliance manufacturer.

**For fuels other than gas, write for information on All-Fuel Chimneys or VSI Chimneys.

General Installation Guidelines

1. Adequate air supply must be provided for combustion and venting of appliance. Local codes or NFPA 54 or CSA-B149.1 specify minimum requirements for combustion ventilation and dilution air.

NOTE: Failure to provide adequate air may result in extreme hazards to life.

2. Gas Vent is suitable for installation inside or outside. However, the sizing tables in NFPA 54 or CSA-B149.1 are for vents not exposed to the outdoors below the roof line. Outside vents could reduce venting action; therefore, such installations are not recommended. In the event outside venting is necessary, vents should be sized as close to maximum capacity as possible. In cold climates, the use of external vent may result in operational problems such as poor draft, excessive condensation of moisture and ice build-up. Whenever possible, outside vents should be enclosed inside a chase that maintains the minimum clearance to combustibles. Appliances served by an outside vent must have an adequate air supply to balance inside and outside air pressure to reduce the possibility of reverse venting action.
3. The vent should be sized for the sea level name plate input rating of the appliance in accordance with the procedures set forth in NFPA 54 (The National Fuel Gas Code), CSA-B149.1 (Canadian Fuel Gas Installation Code) or the American Metal Products Gas Vent Capacity Tables.
4. When installing, make sure arrow on the part is pointed up or away from the appliance.
5. When installed as a Type B Gas Vent, a minimum airspace clearance to combustible material is required. For Type B see Section 1, Page 4. For Type B 2x4 and BW Vents see Section 2, page 12 for clearance to combustibles (B 2x4 and BW not available in Canada). All locking joints are to be securely snap-locked together. See the rear page of these instructions for detailed information about locking and unlocking vent sections. The first vent section must be screwed to the appliance outlet collar.
6. Gas Vent Connectors should be installed in accordance with our installation instructions. Unlisted single-wall connector pipe shall be securely supported and joints fastened with sheet metal screws, rivets or other approved means. At the point of connection of the single-wall connector pipe to the double-wall gas vent, three sheet metal screws or rivets may be used as an approved means.

NOTE: Do not use sheet metal screws at the lock joints of Model E, R, and O Gas Vents. The use of screws is permissible only where mentioned in the installation instructions.

7. Wherever possible, install vertical vents directly above appliances before beginning any lateral runs. Lateral venting should be kept to a minimum to avoid vent resistance. Horizontal runs to vents should be in accordance with the appropriate tables in NFPA 54 or CSA-B149.1. Laterals should be supported. Excessive number of fittings, such as elbows and tees, should be avoided.
8. Maintain a slight pitch or rise from the appliance to the vertical stack on horizontal runs.
9. Vents must terminate vertically above the roof line. Refer to the **Termination of Vent Structure** section on page 11 for details.
10. Strap or support vents securely in position to maintain the minimum airspace clearance to combustibles.
11. Firestops must be used where vents pass through floors or ceilings.
12. More than one gas appliance may be vented into a common vent. Close attention should be paid to vent sizing to assure adequate venting action.
13. Portions of gas vents that may extend through accessible spaces are to be enclosed to:
    a. Maintain the minimum airspace clearance.
    b. Avoid personal contact with the vent.
    c. Avoid damage to the vent.

IMPORTANT: The enclosure must provide a minimum airspace to all combustible material and building insulation. Refer to section 1 page 4 for Type B and section 2, page 11 for Type B 2x4 and BW clearances.

14. Gas vents which extend through any story above that on which the connected appliance is located are to be provided with enclosures to avoid personal contact and damage. Except for installation in single and two family dwellings, the enclosure should have a fire resistance rating equal to or greater than that of the floor or roof assemblies through which they pass. Consult local building code for proper wall construction, access, clearance, support, initial penetration of breeching, and method of termination, or refer to the National Fuel Gas Code (NFPA 54) or CSA-B149.1.
15. At the level where the vent penetrates the air/vapor barrier, special attention is required. Seal the vapor barrier to the firestop or firestop support using an appropriate caulking compound as per the requirement of local authorities. In certain area such as in Canada, vents in attic space must be in an enclosure all the way to the underside of the roof deck. The enclosure must have the minimum air space clearance to the outer pipe as per Table 1.

CERTIFICATION LABELS

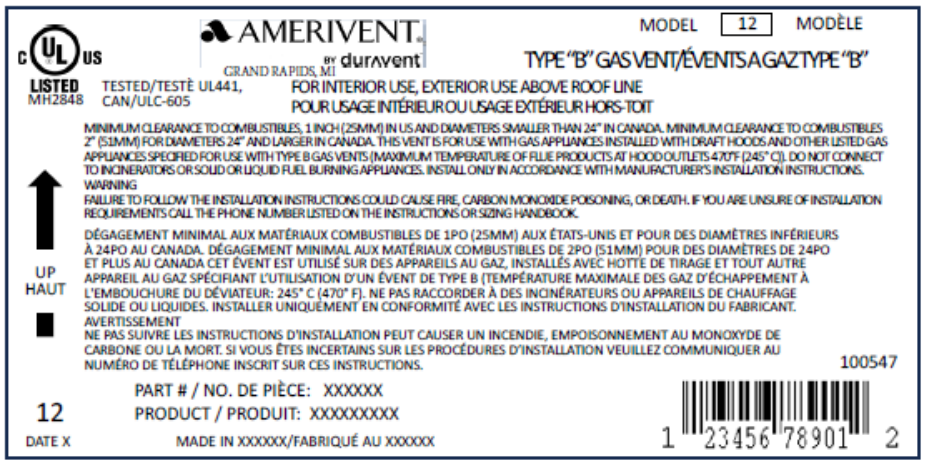

16. Type B Gas Vent has been tested, and listed using all of the supports, firestop, etc., described herein. Deletion or modification of any of the required parts or materials may seriously impair the safety of your installation.

17. Never vent gas appliances into an unlined masonry chimney. Install either Type B Gas Vent or a listed metal relining system inside chimney to reduce condensation and reduce the chances of improper venting that could occur in unlined chimneys.

NOTE: While handling sheet metal parts, it is advisable to wear gloves to avoid personal injury from sharp edges or projections.

18. If a power vent fan is used, make sure it is located at the terminus so as to maintain negative pressure within the vent.

19. The gas venting system should be inspected prior to the heating season by a qualified technician. This inspection should include removal of the cap to confirm an unrestricted vent.

Installation

Beginning Vent Structure with the Connector or Breeching System

Single-Wall Connectors

Connect the single-wall to the draft hood of the appliance with three (3) sheet metal screws. Each joint of the single-wall system must be connected with three (3) sheet metal screws. Single-wall connector *must not* penetrate any walls or ceilings, or be used in any cold or nonroutinely inspected areas. Single-wall connector pipe may extend to the first point of penetration of structure where the use of a firestop and support assembly are required. If using gas vent connectors, refer to those installation instructions.

Type B Gas Vent Connectors

Attach the vent section directly to the draft hood of the appliance with three (3) sheet metal screws. Allow the UL minimum airspace clearance to combustibles. Where the vent penetrates structure, use a Firestop and the Support Assembly to maintain proper clearance at this and successive intervals throughout the structure.

Section 1
Models E & R Round

Basic Vent Structure

Type B Gas Vent sizes are specified by the inside pipe diameter. Model E is available in sizes 3" through 6" diameters and has a ¼" airspace between pipe walls. Model R is available in sizes 7" through 30" diameters and has a ½" airspace between pipe walls. When calculating the assembled length, allow 1" length reduction for the overlap at each joint. The Model E and Model R Gas Vent is UL-listed for the following applications and clearances to combustibles as shown in **Table 1**.

Underwriters Laboratories-listed Minimum Clearances to Combustibles		
Round Description	Type	Minimum Clearance
Model E (UL441 & CAN/ULC-605)	B	1"
Model R (UL441)	B	1"
Model R - 7" Through 24" (CAN/ULC-605)	B	1"
Model R - 26" Through 30" (CAN/ULC-605)	B	2"

Table 1

Support of Vent Structure

There are five different types of supports as explained below (see A through E). In addition, field-fabricated supports may be used. Consult local building codes for applicable regulations regarding field-fabricated supports.

A. Directions for Installing Buckets

NOTE: Bucket Hangers (ABH) are available for sizes 3-inch through 8-inch only. Hangers are designed to fit between 16-inch on-center joists. Buckets in size 9-inch and larger do not use hangers. Instead, they must be nailed in place into a properly sized, framed-in opening. Buckets in sizes 3-inch through 8-inch may also be nailed in place into a properly sized, framed-in opening as an alternative to using bucket hangers.

Installations Using Buckets (AB) with Hangers (ABH) - Sizes 3-inch through 8-inch only

1. Check to see that center-to-center distance between joists is 16 inches nominal. If not, additional framing must be added.
2. Bend the four rectangular tabs inward on Bucket. This will center vent pipe and maintain a 1-inch minimum clearance to outside wall of Bucket. See **Figure 1**.

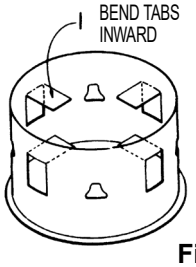

Figure 1

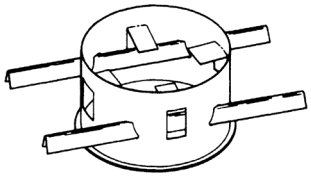

Figure 2

3. Place U-shaped hanger bars through pairs of openings in the side of the Bucket. Note that open portion or U-shaped bar faces downward. Do not use rectangular openings with inward-bent tabs. Instead, pass hanger bars through closest pairs of plain openings as shown in **Figure 2**.
4. Nail both hanger brackets into sides of joists. Bottom edge of brackets should be even with bottom edge of joists. Use four nails per bracket, nailing through small triangular-shaped openings in brackets. **DO NOT RELY ON TRIANGULAR-SHAPED BARBS TO HOLD BRACKETS IN PLACE. BRACKETS MUST BE NAILED TO JOISTS.** See **Figure 3.**
5. Snap hanger bars into slots in hanger bracket.

6. The Bucket Support does not serve as a firestop. A firestop is required when using the bucket as a support.

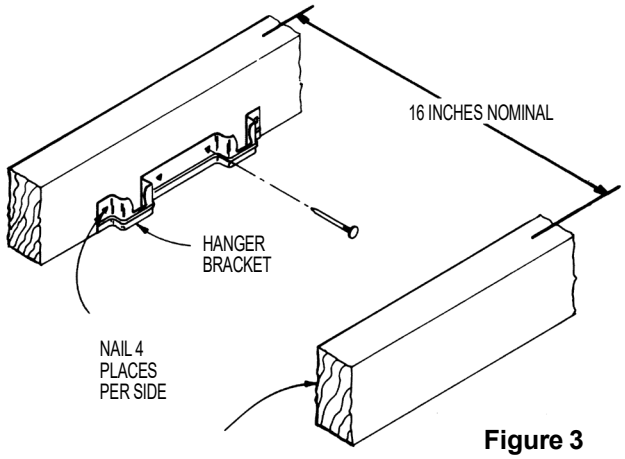

Figure 3

Installation Using Bucket Without Hangers

1. Completely frame in (on all four sides) a properly sized square opening. Select opening size so that outside wall of Bucket (AB), 3-inch through 8-inch, will contact framing at four sides. See **Figure 4.**

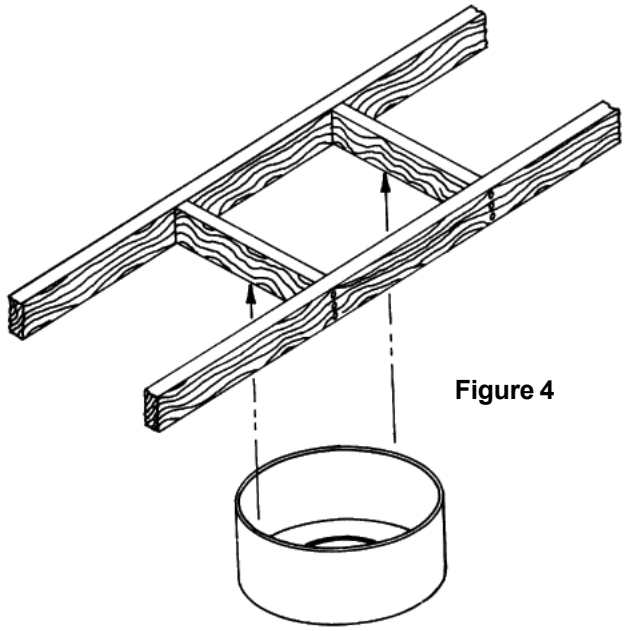

Figure 4

2. Position Bucket through opening so that bottom of Bucket will be flush with, or a little below, bottom of ceiling.

3. Nail through sides of Bucket into framed-in opening. Nail on all four sides, using a minimum of two nails per side (8 nails total, minimum).

Bucket Connectors

The Bucket Connector (EBC), sizes 3-inch through 6-inch, is used to make the connection of either single-wall connector pipe, or Type B Gas Vent, utilized as connector, through the bottom of the Bucket.

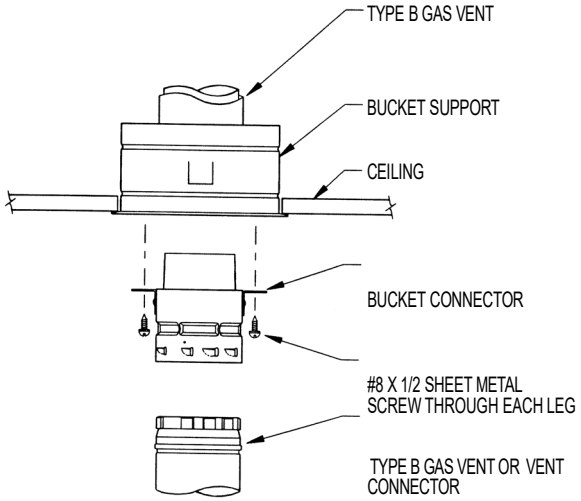

Figure 5

1. The Bucket Connector is installed by positioning it against the bottom of the Bucket, as shown in **Figure 5**, with the mounting tabs against the bottom of the bucket.

2. Position the inner wall of the Bucket Connector inside the bottom end of the inner wall of the B Vent section through the hole in the bottom of the bucket. Attach the mounting tabs with sheet metal screws.

3. Provide additional strapping or hangers for connector offsets.

B. Firestop Supports

The Firestop (FS) and Support Bracket (SB) are designed for use with Type B Gas Vent in sizes 3-inch diameter through 8-inch diameter.

When used by itself, the Firestop (FS) serves as a firestop, while maintaining one-inch clearance to combustibles from the outer wall of the Type B Gas Vent. When the Firestop (FS) is used with the Support Bracket (SB), this combination of parts (FSP) serves as both a firestop as well as a support. Each support is designed to support up to 20 feet of vent pipe when installed as follows:

1. It is recommended that the Vent Pipe be supported at least every other floor. The distance between supports must not, in any case, exceed 20 feet.

2. Frame in an opening providing proper clearance to Type B Gas Vent. See **Figure 6** and **Table 2**.

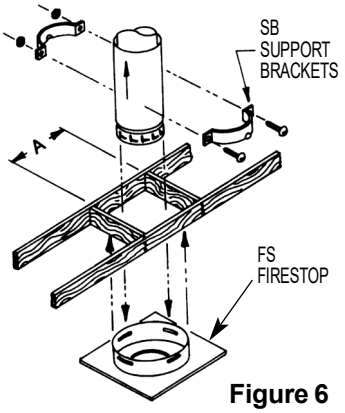

Figure 6

Vent Size	"A" Square
3E	5½ inches
4E	6½ inches
5E	7½ inches
6E	8½ inches
7R	10 inches
8R	11 inches

Table 2

3. Secure Firestop Support (FSP) as shown in **Figure 7**. Install strapping (minimum ¾", 28-gauge) through all four slots in collar, and nail as shown or nail at all four slots as shown in **Figure 8** and **Figure 9**.

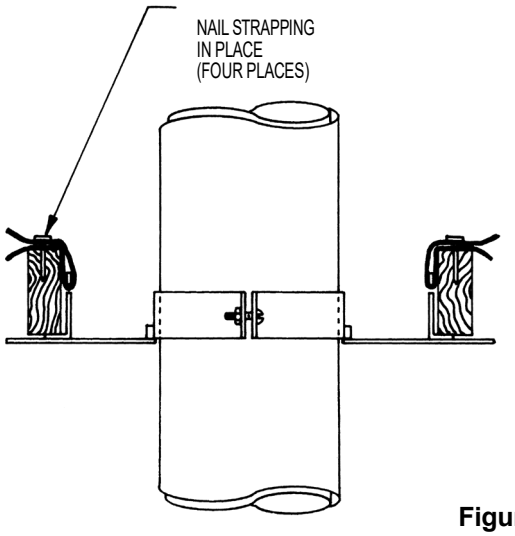

Figure 7

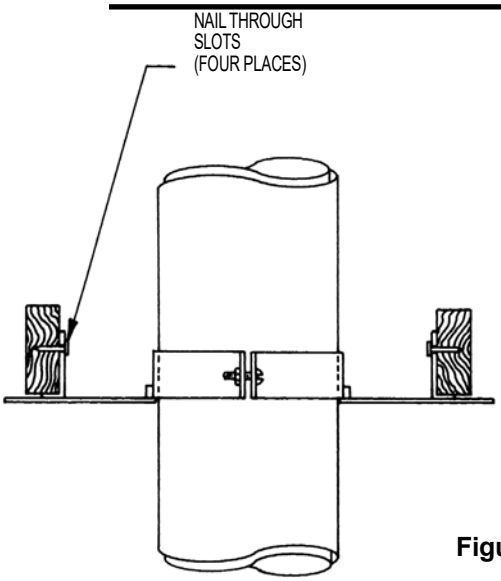

Figure 8

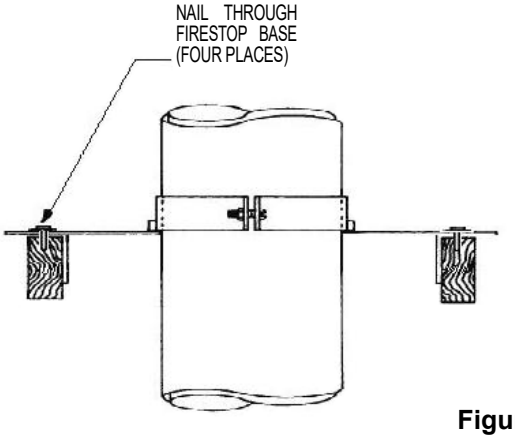

Figure 9

4. Pass Type B Gas Vent through opening in Firestop Support (FSP).

5. If used as a support, install Support Bracket (SB) as shown in **Figure 6**. Clamp bracket securely to pipe section, using the pair of bolts and nuts provided.

   For installations with multiple supports, an adjustable length section of Type B Gas Vent should be installed between each pair of locations where a Firestop with Support Bracket is used. See **Figure 10**. This provides relief for linear thermal expansion. The adjustable length section should be positioned directly under the Vent Pipe section that is being supported.

NOTE: When installed with the entire vent in a vertical position as shown in **Figure 10**, the bottom end of the adjustable length sections should not be secured with the screws provided. This will allow movement to compensate for expansion. See section titled **Adjustable Length Sections** on **Page 7**.

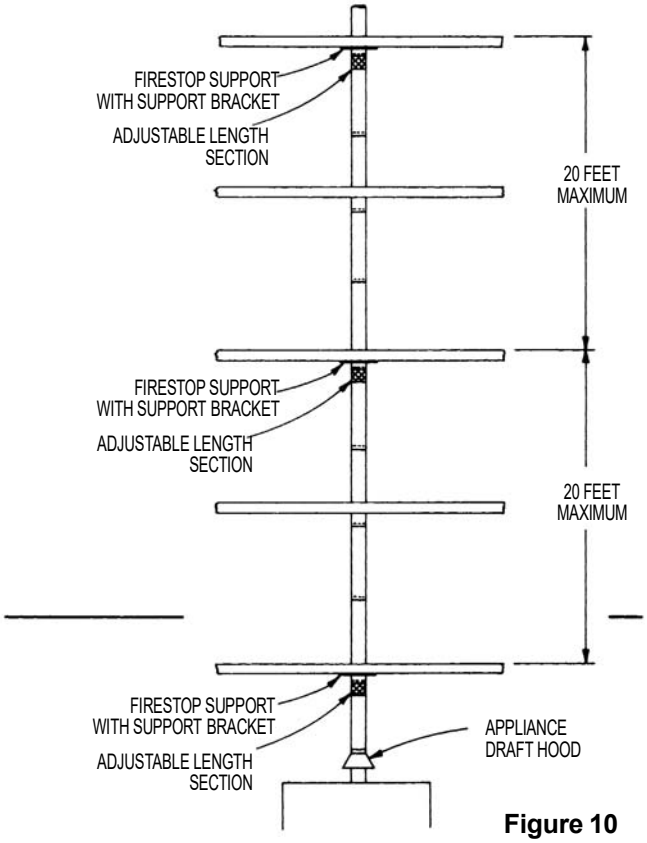

Figure 10

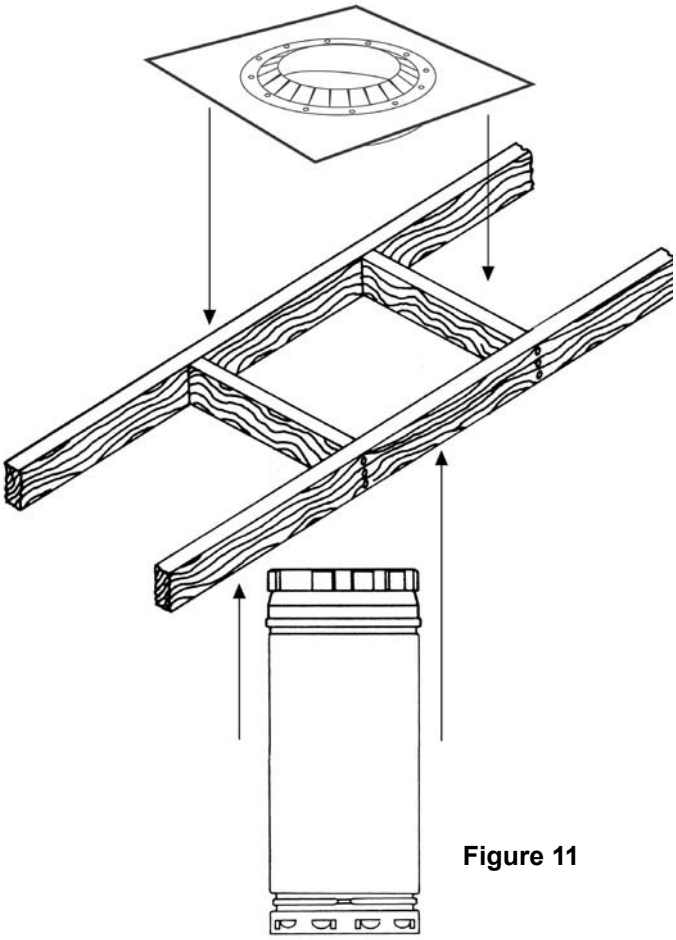

Figure 11

C. Installation Instructions for Optional Model EGS Firestop Gripper Support

1. At the desired location, cut a square or circular hole in the floor at a minimum of 2½ inches larger than the nominal pipe size, but not greater than 4 inches larger. See **Table 3** below. This will provide the REQUIRED 1-INCH CLEARANCE FROM COMBUSTIBLES.

Support Hole Dimensions				
Nominal Pipe Size (inches)	3	4	5	6
Minimum Hole Size (inches)	5.5	6.5	7.5	8.5
Maximum Hole Size (inches)	7	8	9	10

Table 3

2. Place the support over the hole with the ring down. The Gripper Support (EGS) should be attached to the TOP of the opening only.
3. Use an 8 penny nail or self-drilling sheet metal screw in each corner at least 3/8" from the edge.
4. Pipe should be inserted from below. A maximum of 30 feet of pipe may be installed above the support before resupport is required. See **Figure 11**.

D. Round Support Plates

The Round Support Plate (RSP) Support is designed for use with 9-inch diameter and larger Type B Gas Vent. Each support is designed to support up to 30 feet of Vent Pipe when installed as follows.

1. It is recommended that the Vent Pipe be supported at least every other floor. The distance between supports must not, in any case, exceed 30 feet.
2. The circular cutout in the Round Support Plate is designed to engage the uppermost recess in the female end of the Vent Pipe. See **Figure 12**.

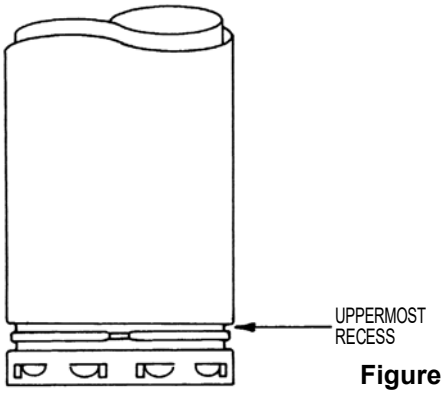

Figure 12

3. Surround the Vent Pipe with the two identical Support Plate halves. See **Figure 13**. Engage the plate edges in the uppermost pipe recess as described in **Step 2**. Use two pair of bolts and nuts to hold the plate halves together. (Four predrilled tabs are provided for this purpose.)

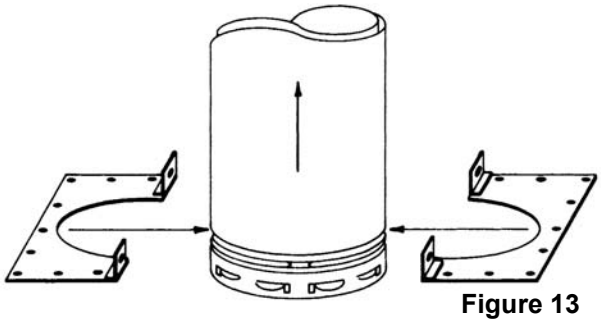

Figure 13

4. Mounting holes are provided around the perimeter of the Round Support Plate. Use appropriate fasteners to secure the Support Plate halves to the opening between floors. (Round Support Plates should be attached to the TOP of the opening only. See **Figure 14**.)

5. For installations with multiple supports, an Adjustable Length Section of Type B Gas Vent should be installed between each pair of locations where a support is used. See **Figure 14**. This allows the location of the pipe recess to be in the proper position at each opening where a support is to be used. The Adjustable Length Section also provides relief for linear thermal expansion. The Adjustable Length Section should be positioned directly under the Vent Pipe Section that is being supported.

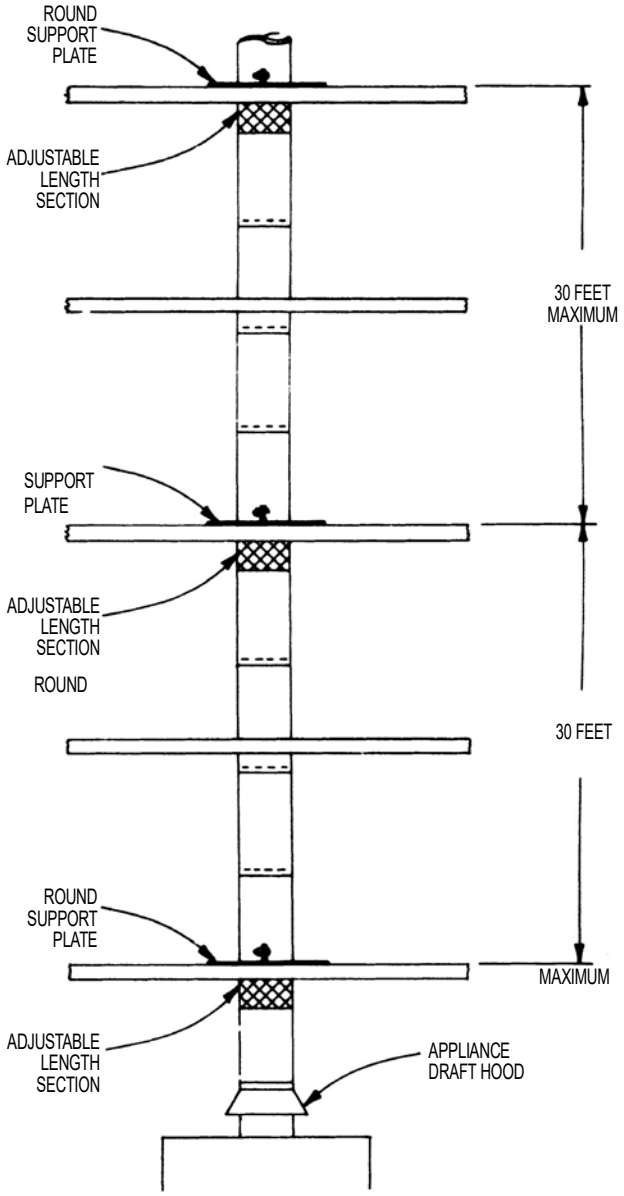

Figure 14

E. Vent Pipe Hanger and Support Bracket Assembly

The Vent Pipe Hanger (VPH) (sizes 3-inch through 7-inch) and the Support Bracket Assembly (SBA) for 8-inch through 12-inch Type B Gas Vent are used to provide lateral and some vertical support for sections of Vent, as well as the correct clearance to combustible materials. They also provide support and resupport for offsets and horizontal runs.

Adjustable Length Sections

Adjustable Length Sections (12A and 18A) of Type B Gas Vent are available to allow for installation where fixed-length sections do not produce the desired dimensions. Sizes 3-inch through 8-inch use a single sheet metal screw, which should be screwed into the mating section of Type B Gas Vent. Sizes 9-inch and above use two sheet metal screws equally spaced around the mating section. Oval lengths use a clamping method consisting of a screw and tabs to draw the outer wall tightly around the mating section of Type B Gas Vent.

Adjustable Length Sections may also be used to compensate for linear thermal expansion between two fixed points in the vent system. Examples of this are shown in **Figures 9 and 14**. In these examples the fastening devices are not used. This allows for expansion between two fixed supports or between a fixed support and the appliance. Note that the fastening means should be left loose only if the Vent and the Adjustable Length Sections are installed vertically. If the Adjustable Length Sections are used in a position other than vertical, such as between offsets, the fastening means should be used. Finally, when joining an Adjustable Length Section to another section of Type B Gas Vent, make sure that there is a minimum overlap of two inches.

Firestopping

All Type B Gas Vent passing through floors, ceilings or within vertical stud walls must be firestopped at floors or ceilings. The Firestop must effectively close the opening between the outer wall of the Vent Pipe and the hole cut in the structure. In attics, the Firestop should be placed on top of the framed ceiling opening to prevent insulation and debris from coming into contact with the Vent Pipe.

NOTE: The Firestop Support Plate Assembly (FS, FSP and EGS), the Support Plate, or Vent Collar functions as a Firestop at the location where it is installed.

Wall Thimble

The Wall Thimble (WT) is available to use where a Type B Gas Vent passes through a vertical wall. The Wall Thimble will provide for the proper clearance to combustible material as the vent passes through the wall, and will also act as a firestop for the vent.

Universal Adapters

The Universal Adapter (EUA-M and EUA-F) is available in sizes 3-inch through 6-inch in both male and female versions. The Universal Adapter may be used to connect round Type B Gas Vent to other manufacturers listed Type B Gas Vent as shown in **Table 4**.

1. General Products - Air Jet
2. Hart & Cooley Vent
3. Selkirk
4. Metal Fab
5. Mitchell Metal Products - Mitch Vent
6. Simpson Dura-Vent
7. White Metal Products - Twin Stacks
8. GSW
9. Energy Vent

Table 4

1. The Universal Adapter is installed, as shown in **Figure 15,** by sliding the Adapter over the outside wall of the other listed Type B Gas Vent. For the Male Adapter, the inner wall goes inside the other Gas Vent, while the inner wall for the Female Adapter goes around the outside of the bottom end of the inner wall of the other Gas Vent.
2. When the Universal Adapter is in place, tighten the fastener securely.
3. The Universal Adapter is not intended to act as a structural member, and the Vent installation should be re-supported.

Increasers

An Increaser (IX) is used to make a transition from a smaller vent diameter to a larger vent diameter. The Increaser is available in steps up to a maximum of four (4) sizes larger. For example, a 4-inch diameter vent can be increased with a single Increaser from 4-inch to 8-inch or 5-inch to 9-inch.

Model R Universal Male Adapter – 10” & 12” Only

A Universal Male Adapter is available in a shorter version for diameters of 10” and 12”. It is used in adapting to other manufacturers of round Type B gas vents to Model R. Slide the Adapter over the top (outlet) end of the adjacent gas vent until fully seated. Secure in place with the 3 supplied sheet metal screws through the pre-punched pilot holes.

Tees and Wyes

Model E and R Tees (T) and Wyes (Y) are designed for breeching or as connectors for vertical, sloped, or horizontal systems. They can also be used to provide access for inspection or drain fittings. Tees and Wyes must be isolated from expansion forces by supporting as needed and with Adjustable Length Sections. Any unused open end of the Tee or Wye should be closed off with a Tee Cap (TC). Reducing Tees (T) and Wyes (Y) are also available.

NOTE: An Adjustable 10” Tee with an 8” branch is available. Slide the 8” male end of a rigid length into the branch. Once in its final position, secure with 3 sheet metal screws (supplied) through the pre-punched pilot holes.

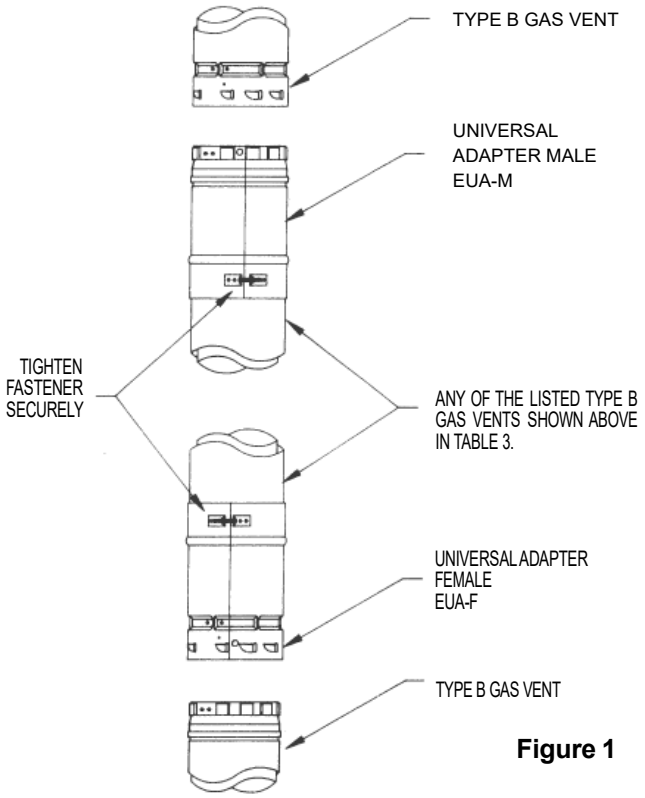

Figure 1

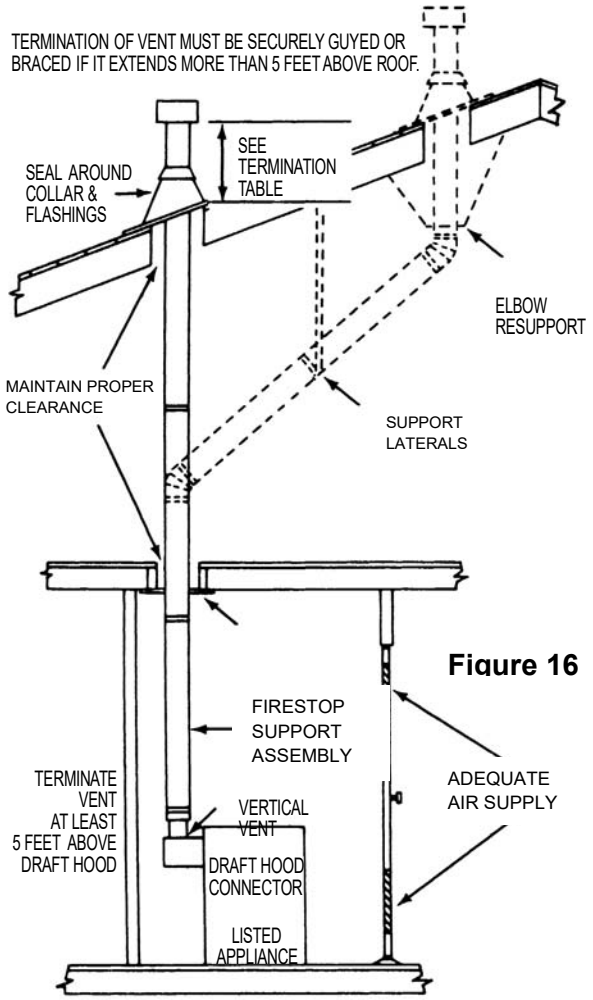

Figure 16

Elbows and Offsets

Type B Gas Vent Model E, sizes 3-inch through 6-inch, and Model R in sizes 7 and 8-inch, are available in both a 45º and 90º fully adjustable offset. The 9-inch through 14-inch Model R is only available in a 45º adjustable elbow.
A 10-inch 90° nonadjustable elbow is available. The 16-inch and larger is available in 45º nonadjustable elbow. See **Tables 5 and 6** for relative dimensions of offsets and combinations of offsets. Whenever Model E or R Gas Vent Pipe is changed from a vertical direction, the Vent system must be re-supported before and after the change in direction. The support should provide rigid stability, both vertical and horizontally. See Figure 16. Check with your local Building Officials to make sure any alternative suppose method is acceptable.

Table 5

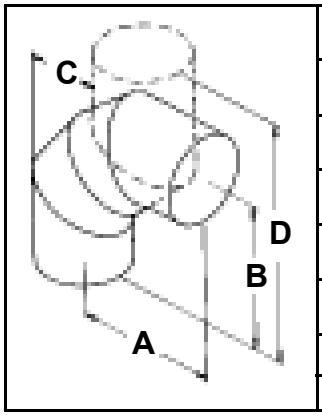

Code No.	Size	A	B	C	D
3EAL	3"	5"	5¼"	1½"	8"
4EAL	4"	5"	5½"	1¾"	8¾"
5EAL	5"	5½"	6"	2¼"	9¼"
6EAL	6"	6½"	7"	2½"	10¼"
7RAL	7"	7¾"	8"	3"	12¼"
8RAL	8"	8¾"	9"	3¼"	13"
10R	10"	10 1/8"	9 1/8"	N/A	N/A

Table 6 — MAXIMUM OFFSET IN INCHES

Vent Size	A	B	With Two 45° Elbows ONLY	With Two 45° Elbows and: One 6" Length	One 12" Length	One 18" Length	One 24" Length	One 3' Length	One 4' Length	One 5' Length
3	3	2 3/4	3 1/4	6 3/4	11	15 1/4	19 1/2	28	36 1/2	45
4	3 7/8	3 1/16	3 1/4	7	11 1/4	15 1/2	19 3/4	28 1/4	36 3/4	45 1/4
5	3 1/4	3 1/4	4 1/4	7 3/4	12	16 1/4	20 1/2	29	37 1/2	46
6	4	3 13/16	4 1/2	8	12 1/4	16 1/2	20 3/4	29 1/4	37 3/4	46 1/4
7	4 5/16	4 1/4	5	8 1/2	12 3/4	17	21 1/4	29 3/4	38 1/4	46 3/4
8	4 3/4	4 9/16	5 1/2	9	13 1/4	17 1/2	21 3/4	30 1/4	—	47 1/2
9	5	5	6	—	13 3/4	18	22 1/4	30 3/4		
10	5 7/8	5 3/8	7 1/4	—	15	19 1/4	23 1/2	32		
12	6	5 3/8	7 1/4	—	15	19 1/4	23 1/2	32		
14	6 5/8	6 1/2	8 1/2	—	16 1/4	20 1/2	24 3/4	33 1/4		
16	7	7	9 1/4	—	17	21 1/4	25 1/2	34		
18	7 9/16	7 1/2	10	—	17 3/4	22	26 1/4	34 3/4		
20	8 1/2	8 5/8	10 1/4	—	18	22 1/4	26 1/2	35		
22	8	7 5/8	10 1/4	—	18	22 1/4	26 1/2	35		
24	8 5/8	8 5/16	11 1/4	—	19	23 1/4	27 1/2	36		
26	9	9	12	—	19 3/4	24	28 1/4	36 3/4		
28	9 1/2	9 1/2	12 3/4	—	20 1/2	24 3/4	29	37 1/2		
30	10	10	13 1/2	—	21 1/4	25 1/2	29 3/4	38 1/4		

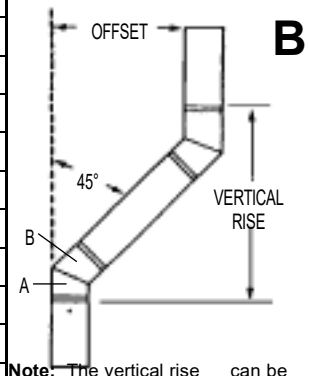

Note: The vertical rise can be closely estimated by adding one "A" and one "B" dimension to Maximum Offset.

Section 2
Model O Oval

Basic Vent Structure

Model O Oval Gas Vent is available in sizes 4, 5, and 6-inch and is listed to UL441. The individual sizes reflect the flow rate capacities equivalent to 4-inch, 5-inch, and 6-inch Round Type B Gas Vent. The joint of the Model O Type B Oval Gas Vent takes up one inch when assembled. The Model O Gas Vent is UL-listed for the following applications and clearances to combustibles as shown in **Table 7**.

Underwriters Laboratories-listed Minimum Clearances to Combustibles		
Oval Description	Type	Minimum Clearance
4", 5" and 6"	B	1"
4" and 5" (when installed in 2x4 stud wall with other-than-recessed heater)	B2x4	Clearances as determined by use of 4OFS or 5OFS firestop spacers at each ceiling level
4" (when installed in 2x4 stud wall with recessed heater)	B-W	Clearances as determined by use of 4OHD hold-down plate, 4OPS ceiling plate spacers, and 4OFS firestop spacers

Table 7

Type B Oval Gas Vent

Type B Oval Gas Vent is available in sizes 4, 5, and 6-inch, and requires a 1-inch clearance to combustibles. This includes all Vent Sections, Elbows, Tees, and Adapters. When used as Type B Gas Vent, Model O must follow all of the same requirements as round Type B Gas Vent, such as the necessity of using firestops at each floor level. See **Section 1**.

Type B 2 x 4 Gas Vent - 4" or 5" Oval

Four- and five-inch Model O Gas Vent may be installed within a standard 2x4 stud wall if **all** the following conditions are met.

1. Arrows on parts should always point up.
2. Stud bay must be a 16-inch, on-center stud bay.
3. 2x4 studs must be a minimum of 3.5 inches deep.
4. There must be nothing else in the stud bay other than the Vent Section. **This includes any type of insulation.**
5. The Firestop Spacer (FS) must be installed at each floor level. See **Figure 17**.

NOTE: Only the straight Vent Pipe Sections, with or without the Oval Tee, may be used inside the stud bay with reduced clearances to combustibles. See **Figure 17**.

Installation of Type B 2 x 4 Gas Vent

1. Cut out the ceiling plate in the space where the Vent is to be installed.
2. Nail a 2x4 support (A) at the desired height between the studs. See **Figure 17**.
3. Attach the Tee Support (B), the Tee (C) with the Oval Tee Cap, and the Vent Pipe (D) as shown on **Figure 17**.
4. At each floor level above the Tee, install the Firestop Spacer (E) as shown in **Figure 17**.

NOTE: Provide at least a 1-inch clearance around the Tee branch where it passes through combustible wall

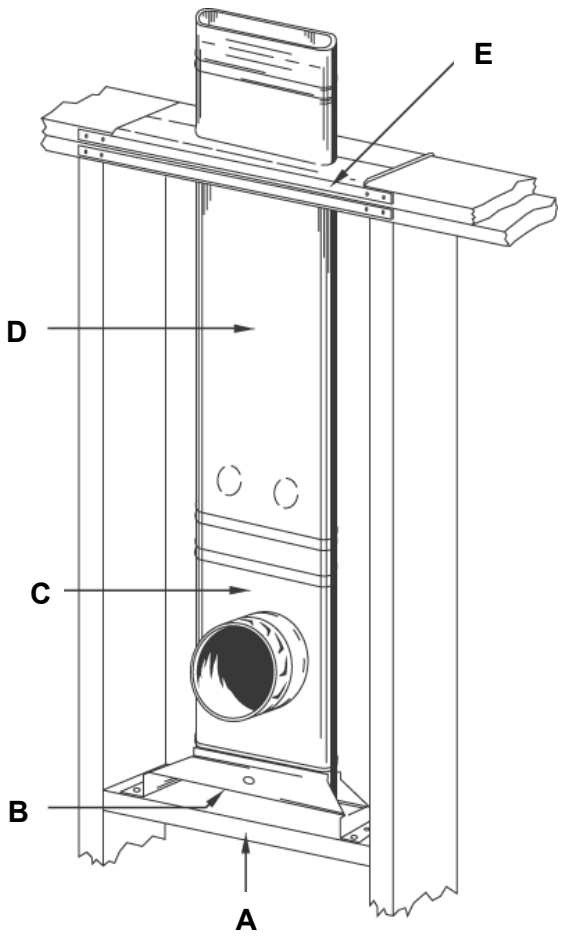

Figure 17

Type B-W Gas Vent - 4" Oval

Model O Gas Vent may be installed within a standard 2x4 stud wall if **all** the following conditions are met.

1. Arrows on parts should always point up.
2. Stud bay must be a 16-inch, on-center stud bay.
3. 2x4 studs must be a minimum of 3.5 inches deep.

4. There must be nothing else in the stud bay other than the Vent and furnace. **This includes any type of insulation.**
5. The installation must contain an Oval Hold-Down Plate (4OHD) at the base, Oval Plate Spacers (4OPS) at the first ceiling level, and Firestop Spacers (4OPS) at any additional floor levels. See **Figures 18** and **19**.

Installation of Type B-W Gas Vent

1. Cut out the ceiling plate at the floor level above the heater flush with studs in space where Vent is to be installed.
2. Nail one Plate Spacer (40PS), (A), across cut-out area in ceiling plate. See **Figure 18**. Plate Spacer (4OPS) is required at the first ceiling level above a wall furnace to center and space vent properly and to provide the required opening between floors.
3. Snap Hold-Down Plate (4OHD), (B), onto bottom end of pipe as shown in **Figure 18**. Install Vent Section in position. Use two No. 8 binder head sheet metal screws to attach Hold-Down Plate firmly to Furnace header plate through pre-punched holes.
4. Nail second Plate Spacer across cutout ceiling plate as shown in **Figure 18**. Firestop Spacers (OFS) must be used at subsequent levels.
5. If the Vent is to continue additional stories within a 2x4 stud space, install Firestop Spacers at the second and subsequent ceiling levels as shown in **Figure 19**.

Type B-W Installation

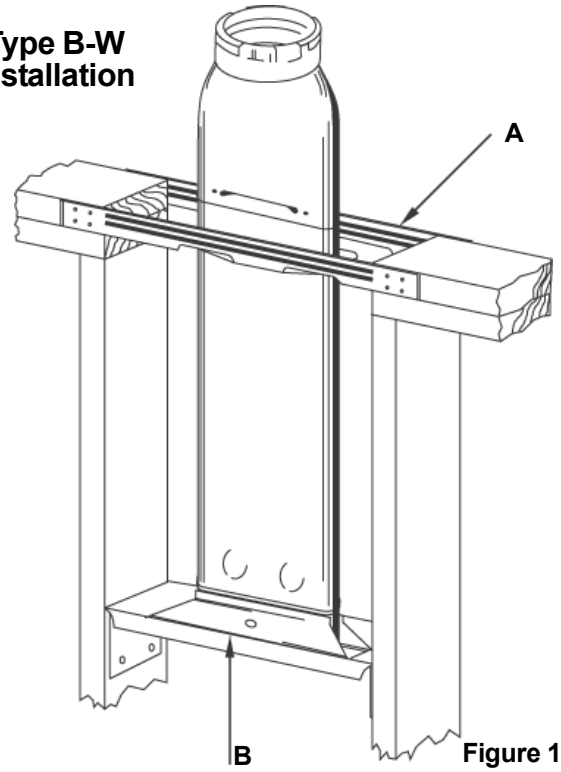

Figure 18

6. After passing through the last Firestop Spacer, the Vent may be finished with either round or oval fittings, flashings and Cap.
   (Round pipe, fittings, flashings, and vent caps cost less than corresponding oval parts.)

Attic Insulation Shield

In some areas, the building code requires the use of an attic insulation shield (AVS) on single-story Type B-W installations.

Multi-Story Type B-W Installations

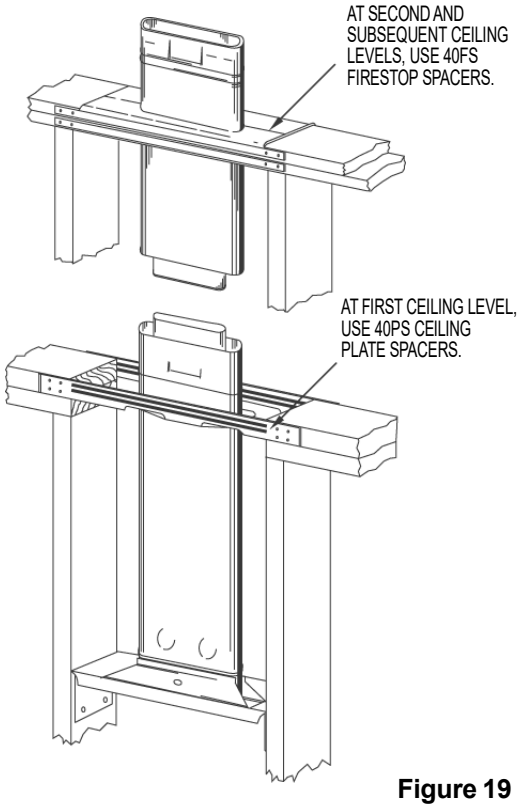

Figure 19

Termination of Vent Structure

The Gas Vent is available for most models and sizes in two styles of Termination Tops--Cap and Universal Cap. The Cap is a lock-neck design with the same lock as the female end of the Vent sections. The Universal Cap is designed to fit inside the inner wall of the vent sections.

12" and smaller Gas Venting Systems, using either the Cap or the Universal Cap, may terminate in accordance with **Table 8** and **Figures 20** and **21.**

Cap 12" and Smaller Gas Vent Termination Table	
Roof Pitch	**Minimum Height**
Flat to 7/12	1.00 Feet
over 7/12 to 8/12	1.50 Feet
over 8/12 to 9/12	2.00 Feet
over 9/12 to 10/12	2.50 Feet
over 10/12 to 11/12	3.25 Feet
over 11/12 to 12/12	4.00 Feet
over 12/12 to 14/12	5.00 Feet
over 16/12 to 18/12	6.00 Feet
over 18/12 to 20/12	7.00 Feet
over 20/12 to 21/12	8.00 Feet

Table 8

Caps 3" thru 30"

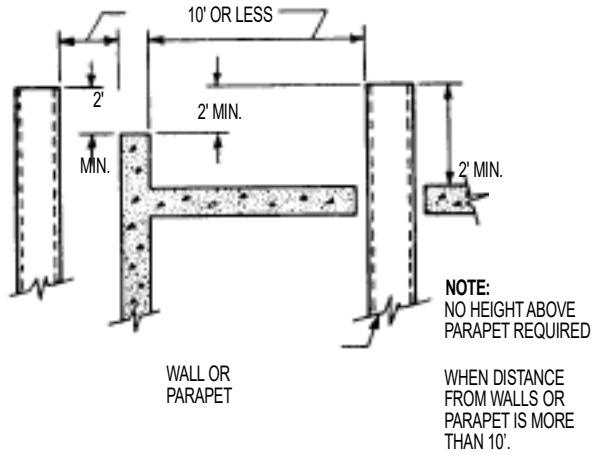

Figure 22

CAUTION

WHERE HEAVY SNOWFALL OCCURS, THE CAP SHOULD BE INSTALLED TO MEET THE ABOVE MINIMUM HEIGHT REQUIREMENTS ABOVE THE AVERAGE SNOW DEPTH.

Caps 12" and Smaller

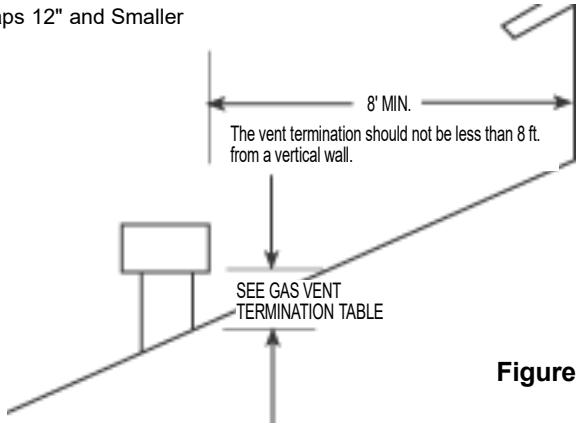

Figure 20

Caps larger than 12" must be located at least 2 feet above the highest point where they pass through a roof and at least 2 feet higher than any portion of a building within a horizontal distance of 10 feet.

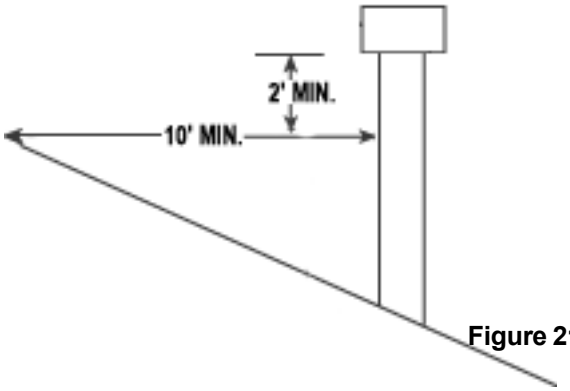

Figure 21

A cap or chimney housing offers resistance to the entrance of rain, snow and debris, as well as birds, and will minimize the effect of wind on the vent. It will protect the vent from down drafts due to a wind that impinges directly upon the vent. A reminder also to homeowners to check the rain cap for icing during low ambient temperatures.

However, no vent cap, cowl, or top can overcome the adverse effect of a region of high static pressure around the vent terminal or the effect of an interior region of low pressure. Regions of high static pressure around the vent terminal can be avoided by following the general rule for the vent termination given previously. Low or negative interior pressures in the building may be caused by (1) failure to provide for combustion air, (2) excessive use of exhaust fans, and (3) tight construction resulting in the lack of infiltration air.

1. To ensure a waterproof roof structure, use the appropriately sized flashing and storm collar where the vent penetrates the roof. Place the Storm Collar over the vent until it is level. Apply a thick horizontal ring of nonhardening, high-temperature mastic, such as silicone, around the vent at the top of the Storm Collar.
2. Vents in excess of 5 feet above the roof should be securely guyed to prevent unnecessary movement. Attach guying to the vent. Never attach guying to the cap.
3. To prolong life and appearance of galvanized steel parts located outside, use proper painting procedure.
   - **a.** Remove oil and dirt with a solvent.
   - **b.** Paint with primer specifically recommended for adhesion to galvanized steel.
   - **c.** Apply finish coat.

Checking Vent Operation

After adjusting appliance and lighting main burner, allow several minutes for warm-up to begin venting action. For water heaters and equipment with draft hoods, hold a lighted match along the rim of the draft hood relief opening of the appliance. Proper venting will draw the flame up or into the draft hood. Improper venting, indicated by escaping or spilling of burned gas, will cause the match to flicker or go out. When consulting Standard NFPA 54 or CSA-B149.1-00., follow procedures for conducting safety inspections of existing appliances and placing equipment in operation, paying particular attention to the section titled *Checking the Draft.*

Painting

For any CAN/ULC-605 applications any exterior exposed gas vent above the roofline will require painting to prolong the life and appearance of the galvanized steel outer casing. Use proper painting procedure at time of installation. Remove oil and dirt with a solvent. Paint first with a good quality zinc primer or other primer recommended for use on galvanized steel. Next apply an appropriate finish coat.

IMPORTANT!

1. **Connect this GAS VENT *only* to gas-burning appliances, as indicated in the Installation Instructions. *Do not* connect to incinerators, or to liquid or solid fuel-burning appliances.**
2. **This VENT SYSTEM must be inspected by a *qualified professional* prior to *each* heating season. This inspection should include the removal of the Vent Termination Cap to confirm that there are no obstructions in the vent.**

IMPORTANT NOTICE TO INSTALLER !!

POST THIS NOTICE NEAR THE POINT WHERE THE CONNECTION IS MADE TO THE GAS VENT !

IMPORTANT!

1. **Connect this GAS VENT *only* to gas burning appliances, as indicated in the Installation Instructions. *Do not* connect to incinerators, or to liquid or solid fuel-burning appliances.**
2. **This VENT SYSTEM must be inspected by a *qualified professional* prior to *each* heating season. This inspection should include the removal of the Vent Termination Cap to confirm that there are no obstructions in the vent.**

IMPORTANT!

1. **Connect this GAS VENT *only* to gas burning appliances, as indicated in the Installation Instructions. *Do not* connect to incinerators, or to liquid or solid fuel-burning appliances.**
2. **This VENT SYSTEM must be inspected by a *qualified professional* prior to *each* heating season. This inspection should include the removal of the Vent Termination Cap to confirm that there are no obstructions in the vent.**

Locking and Unlocking Instructions

Model E - sizes 3" to 6"

TO LOCK NEW CONNECTION STYLE

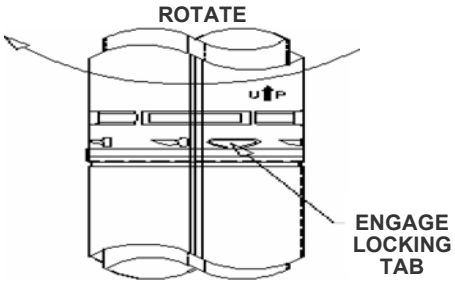

1. Press together and engage the locking tab. Once locking tab is engaged rotate pipe until the "X" on female end of pipe is aligned with the seam of the connecting pipe.

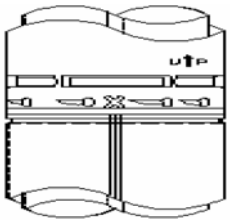

2. Pipes are now firmly connected.

TO UNLOCK NEW CONNECTION STYLE

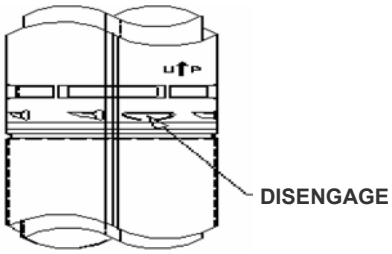

1. Rotate pipe until seams are aligned. Disengage locking tab.

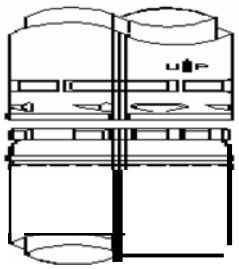

2. Pull pipe sections apart.

NEW/OLD CONNECTION COMPATIBILITY

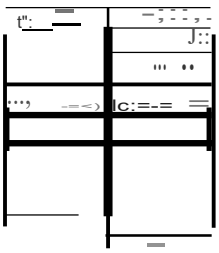

Line up pipe ends and snap together. Push tab must be engaged for secure connection.

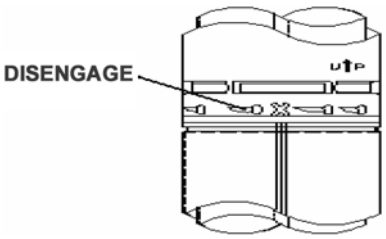

OLD CONNECTION

To disconnect new female end from old male end, disengage lance to left of embossed "X" and the push tab.

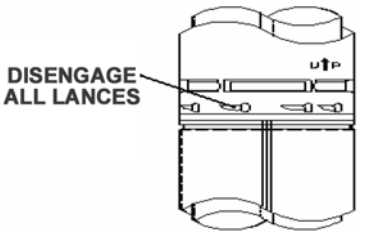

NEW CONNECTION

To disconnect new male end from old female end, disengage alliances and the push tab. Line up seams and pull apart.

Locking and Unlocking Instructions

Model R - sizes 7" & 8” and 14” to 30"

TO LOCK JOINT

1. Line up seams of both pipes (ensure UP ARROW on label is pointing up or away from the appliance).

2. Press down on pipe all the way around until you hear a snap-in-place sound. The pipes are now firmly connected.

TO UNLOCK JOINT

1. On size 7", pry out the 3 lances (teeth) marked with dots. All larger sizes, pry out all lances (teeth). Rotate joint slightly while gently pulling apart.

Model R – Sizes 10” and 12” – Locking Joint

TO LOCK JOINT

1. Line up lance with emboss. Ensure lock seams are not lined up.

2. Push pipe sections together until edge of female end rests on shoulder of male end.

3. Rotate pipe sections until seams are aligned.

4. Engage Lock-Tab into emboss to stop rotation.

Model R – Sizes 10” and 12” – Unlocking Joint

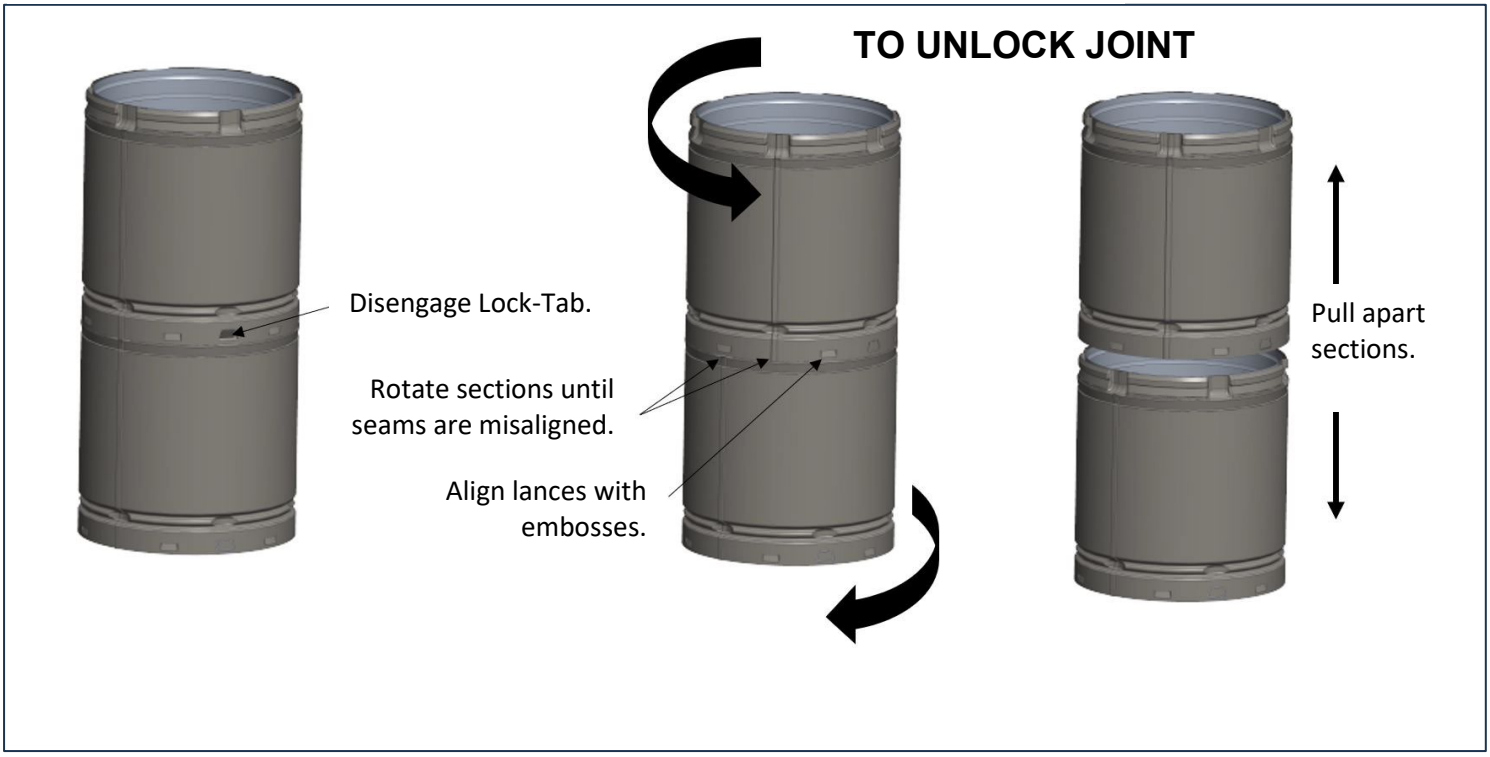

Model O - Oval Vent

TO LOCK JOINT

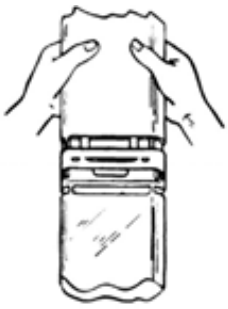

1. Place female coupler over preceding male coupler.

2. Press other side of pipe down until joint seats.

3. Press other side of pipe down until joint SNAP-LOCKS.

TO UNLOCK JOINT

1. Insert screwdriver one inch into joint as shown.

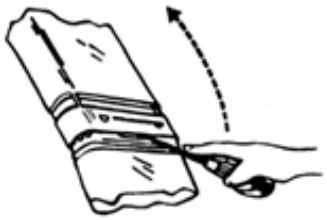

2. Press firmly inward with blade of screwdriver and pry upwards VERY SLOWLY AND GENTLY. Joint will slowly separate without damage.

AMERIVENT® BY duravent™

HART & COOLEY LLC
4460 44th Street S.E. Suite F
Grand Rapids, MI 49512
Toll Free: 1.800.423.4270
info@americanmetalproducts.com

©2024 Amerivent All rights reserved Form No. 803981 10/04/2024 Printed in U.S.A.