Assembly Instruction

ITEM NO.: 9655-1GD

Glider Reclining Chair

Note: Do not use power tools for assembly. Power tools increase the risk of over tightening which lead to spliting or cracking the wood.

Component list

No	Drawing	Qty	Description
A	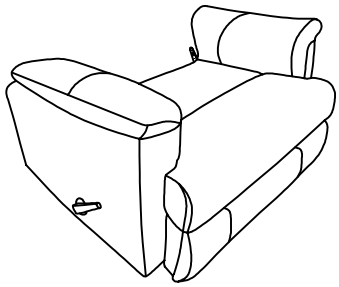	**1**	**SEAT**
B	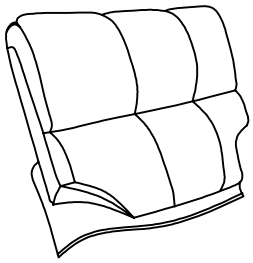	**1**	**BACKREST**

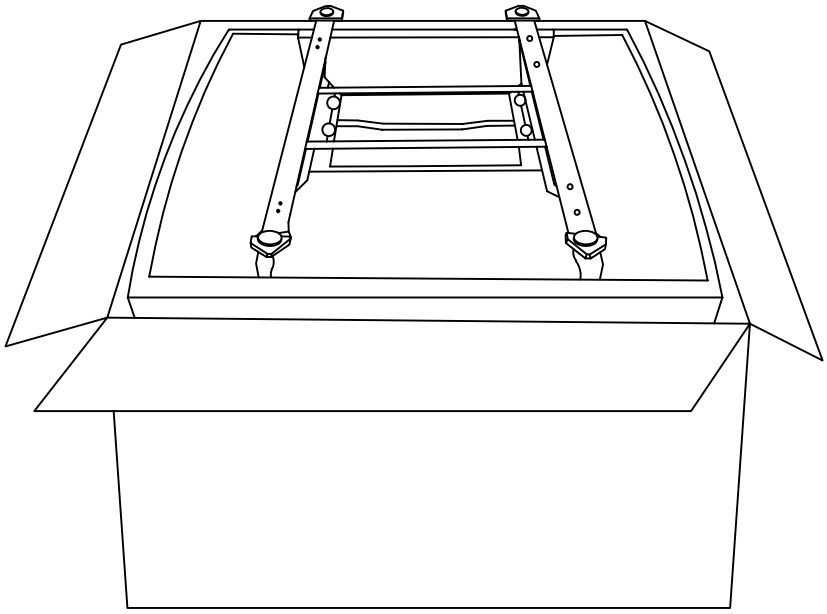

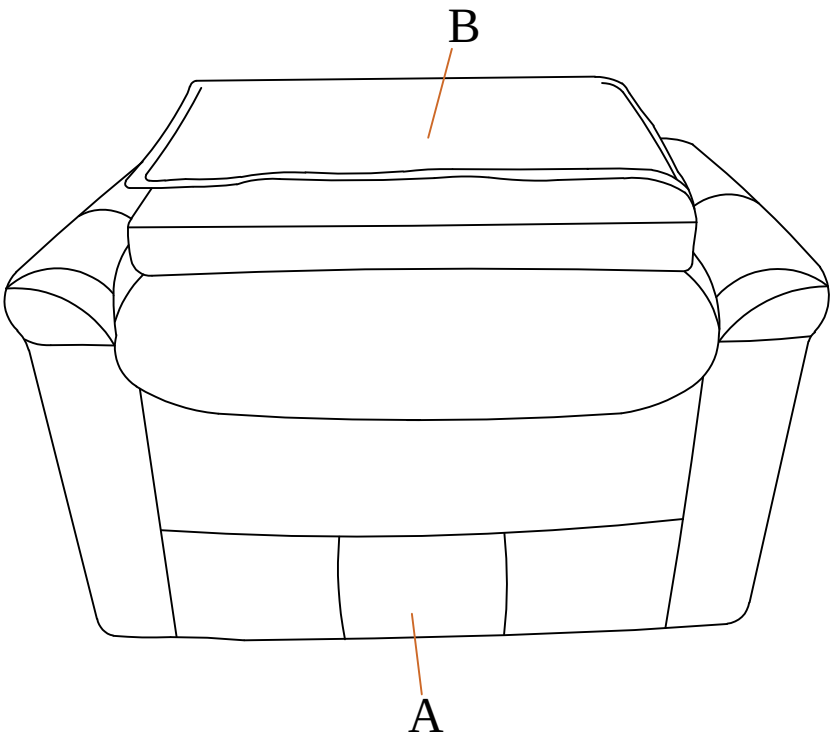
B
A

Step #1

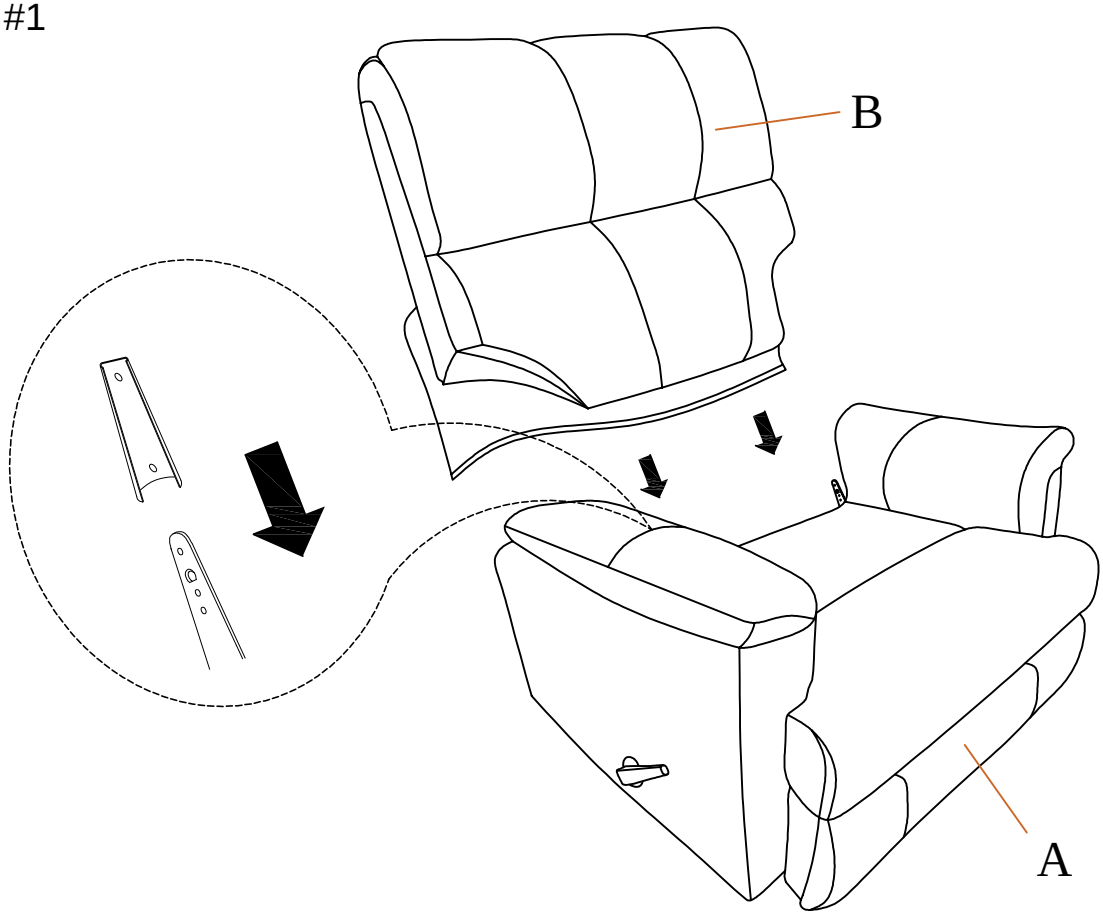

Step #2

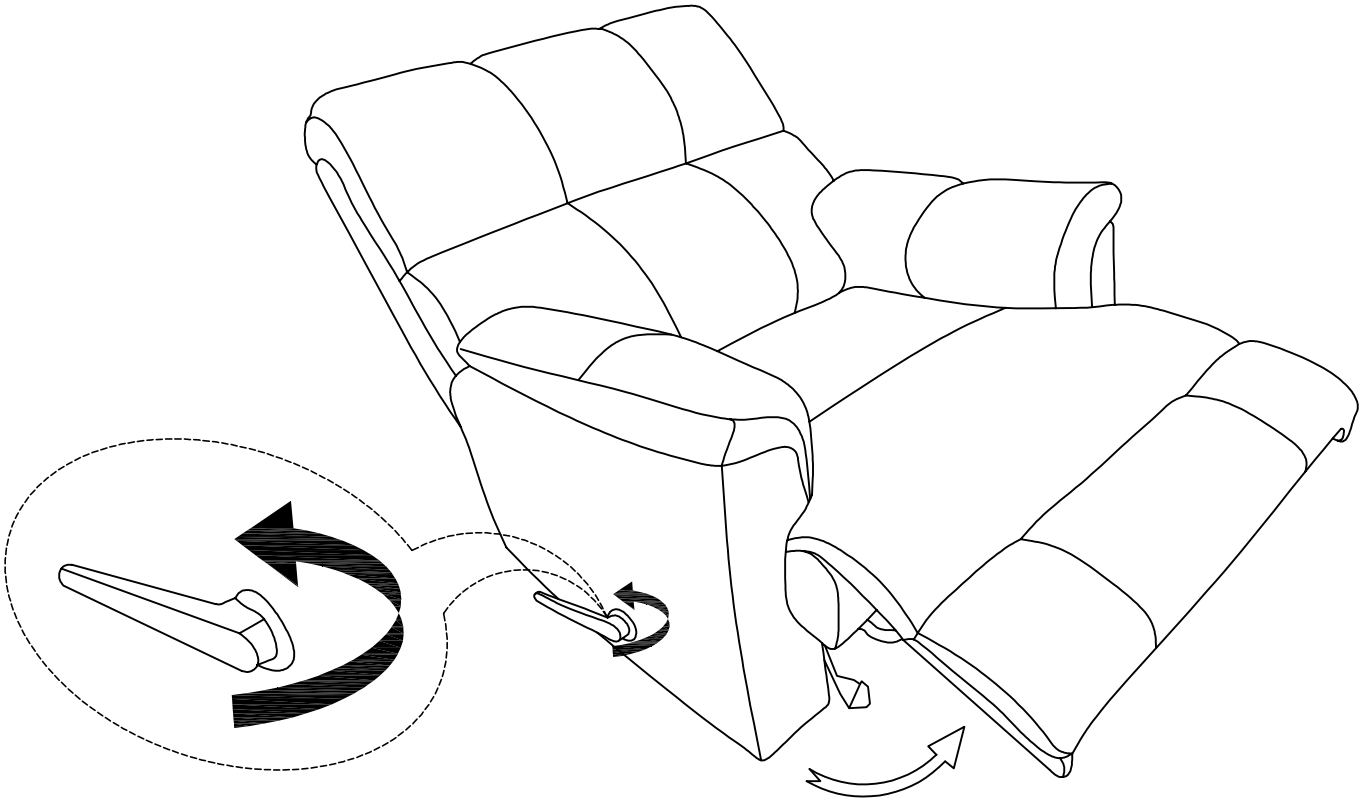

Step #3

Assembly completed.

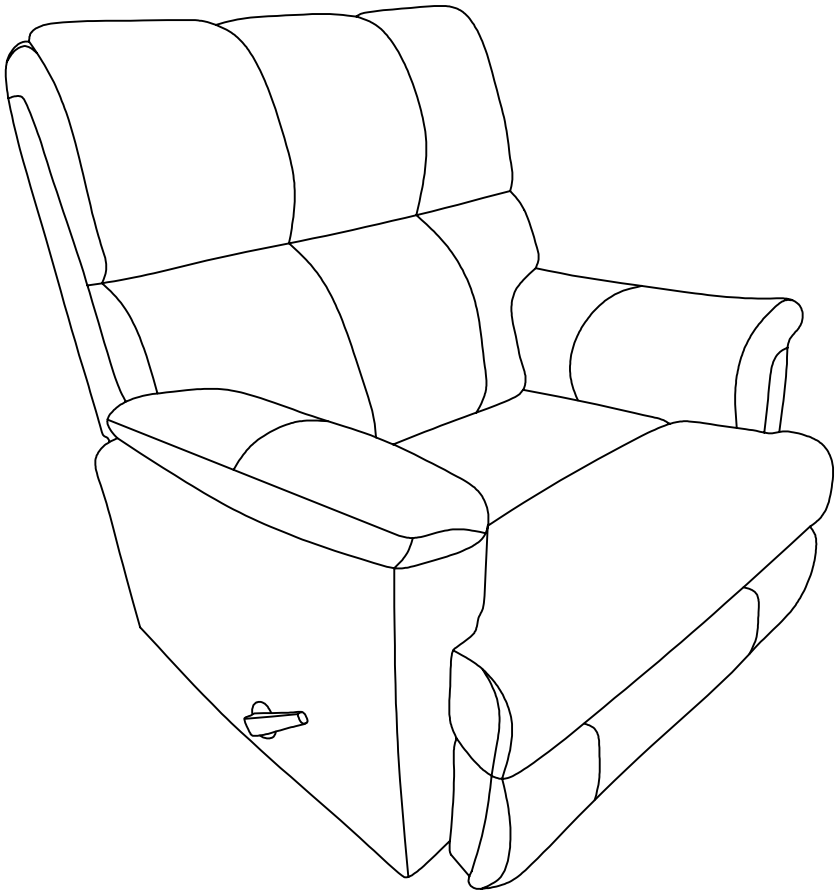

Care Instruction for Textured Microfiber Furniture:

In order to maintain the original appearance of your textured microfiber, please follow below simple care procedures:

• Avoid exposing furniture directly to sunlight or heating and air conditioning outlets.Sunlight and/or exposure to heating and air conditioning outlets will fade/damage textured microfiber. Do not place your upholstered furniture too close to windows, radiators, or vents, and be sure to use windows, radiators, or vents.

• Vacuum or wipe with a soft cloth to remove dust.

• Hardware may loosen over time. Periodically check to make sure all connections are tight. Re-tighten if necessary.

For items use on wooden floor, hard surfaces or carpets, it is recommended to Install protective pads under all legs and supports to avoid/prevent from damages/scratches and discoloration.