User Manual

Ceiling Fan with Lights

Model No.: A02-026

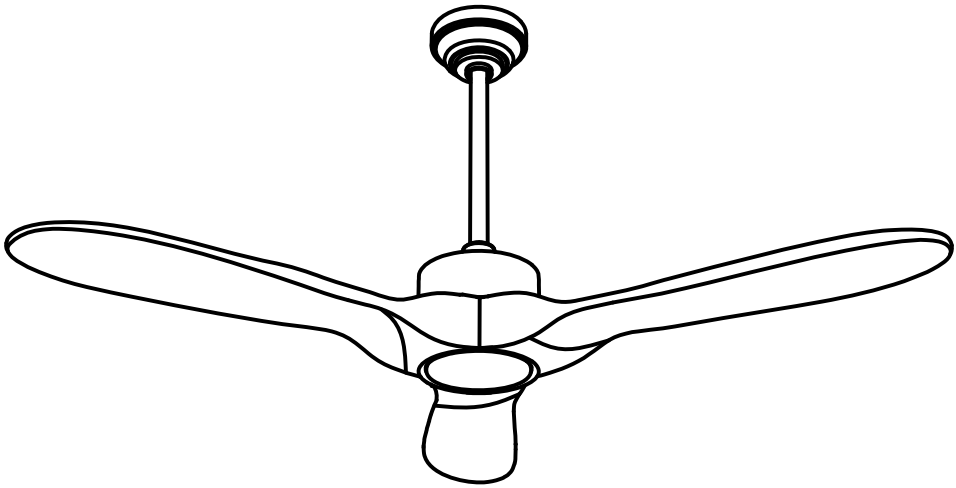

CONTENTS

01 Packing List

02 Installation kit

03 Safety Rules

04 Installation Preparation

05 Installation Step 1

06 Installation Step 2

07 Installation Step 3

08 Remote Control Instructions

09 Trouble Shooting

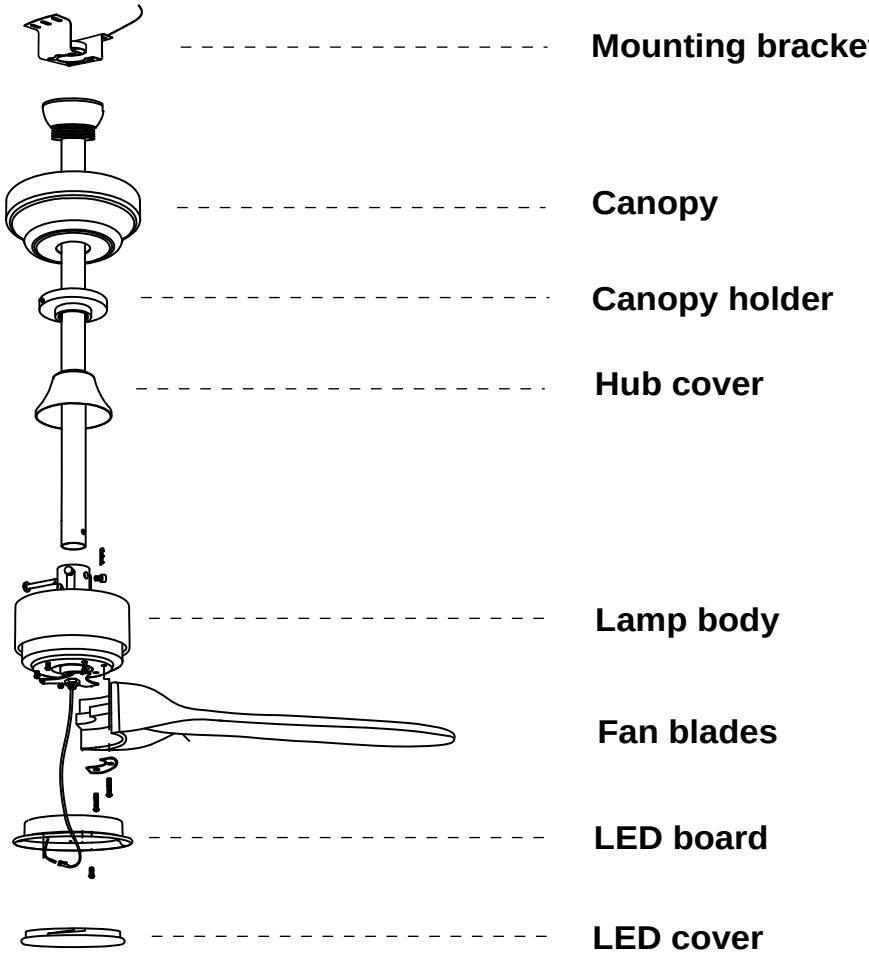

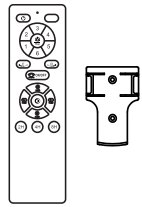

Remote & Remote holder

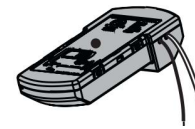

Remote receiver

Note: Some parts may be assembled together in the package.

02 Installation kit

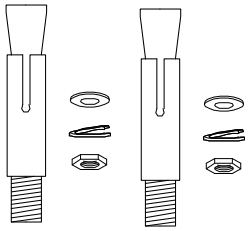

AA



BB

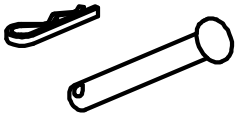

CC

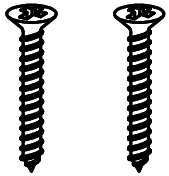

DD

Part	Description	Quantity
AA	Expansion Screw	2
BB	Pair of Gloves	1
CC	Clevis Pin & "R" Pin (assembled)	1 Set
DD	Wood Screw (optional)	2

Note:
Some extra hardware may be included. The quantity listed above is the number required for installation.

1. Be sure the power to the wires you are working on is disconnected, either the fuse is removed or the circuit breaker is turned off. Turning the power off using the light switch is not sufficient to prevent electrical shock.
2. A qualified licensed electrician is required for the installation.
3. The outlet box and support structure must be securely mounted and capable of reliably /supporting a minimum of 50 pounds. Use only UL (cUL for Canadian Installation) listed mounting boxes marked "FOR FAN SUPPORT".
4. The fan must be mounted with a minimum of 7 feet clearance from the trailing edge of the blades to the floor.
5. Do not operate reversing switch while fan blades are in motion (if applicable). Fan must be turned off and blades stopped before reversing blade direction.
6. Do not place any objects in the path of the blades.
7. To avoid personal injury or damage to the fan and other items, be cautious when working around or cleaning the fan.
8. Do not use water or detergents when cleaning the fan or fan blades. A dry dust cloth or lightly dampened soft cloth will be suitable for the cleaning.
9. After marking electrical connections, spliced conductors should be turned upward and pushed carefully up into outlet box. The wires should be spread apart with the grounded conductor on one side of the outlet box.
10. Electrical diagrams are reference only, different fan light may have different light shade and bulbs.
11. Use only our replacement parts. This equipment has been tested and found to comply with the limits for a class B digital device, pursuant to part 15 of the FCC Rules. These limits are to provide reasonable protection against harmful interference in a residential installation. This equipment generates, uses and can radiate radio frequency energy and if not installed and used in accordance with the instructions may cause harmful interference to radio communications.

Warning:

To reduce the risk of personal injury, use only the two steel screws and washers provided with the outlet box for mounting to the outlet box. Most outlet boxes commonly used for the support of lighting fixtures are not acceptable for fan support and need to be replaced, consult a qualified electrician if in doubt.

To reduce the risk of fire, electric shock or person injury, mount fan to outlet box marked "acceptable for fan support".

To reduce the risk of personal injury, do not bend the blade brackets (also referred to as flanges) during assembly or after installation. Do not insert objects in the path of the blades.

04 Installation Preparation

Tools You Need

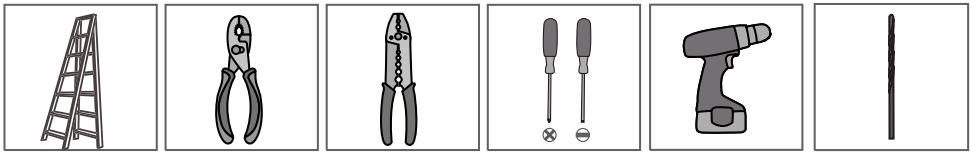

☑ Ladder ☑ Pliers ☑ Wire Strippers ☑ Screwdrivers ☐ Power Drill (optional) ☐ Drill Bit (optional)

If mounting to a support structure, you will also need the optional tools.

What to Expect with Your Installation

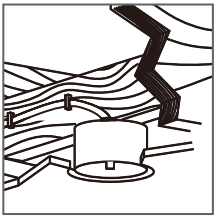

☑ Must be able to secure the fan to building structure or fan-rated outlet box

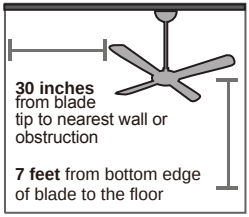

☑ Assess location



☑ Check box to see fan weight



☒ Angled Ceiling not supported

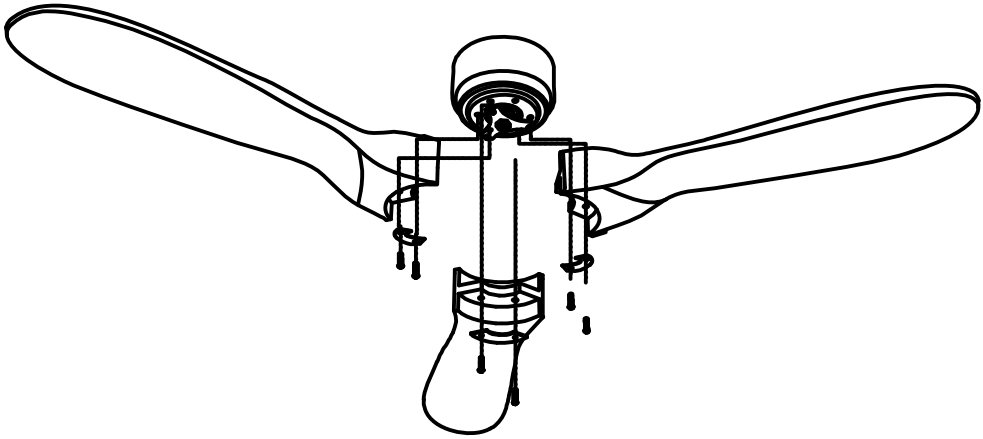

Step 1. Remove the screws from the lamp body, Insert the fan blade from the slot, place the fan blade spacer under the fan blade and secure them with screws.

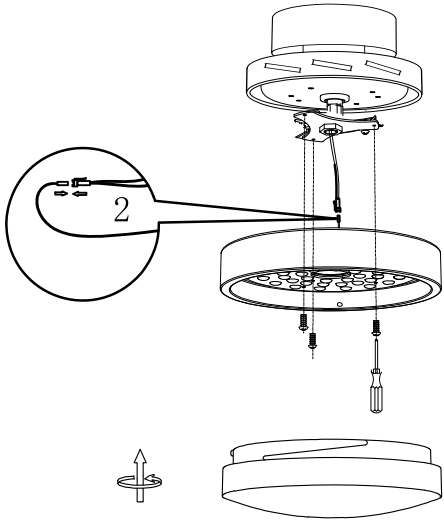

Step 2. Remove the lamp board screws from the lamp body. Install the lamp board to the lamp body and connect the wire of LED light.

Step 3. Install the LED cover by rotating it.

06 Installation Step 2 (Assemble the downrod)

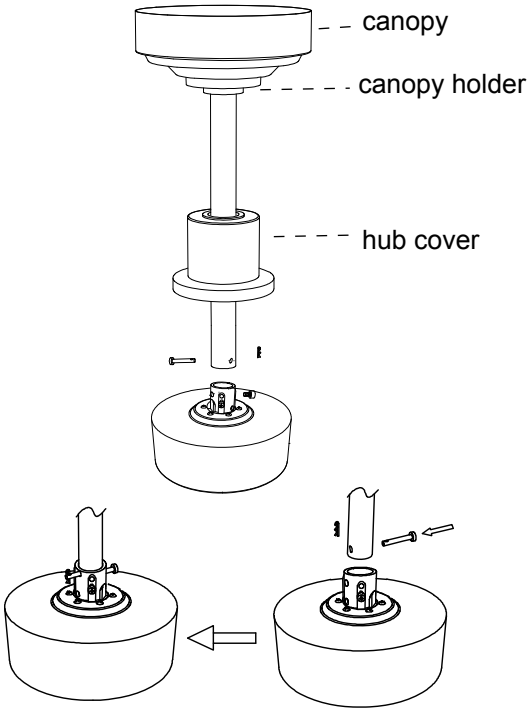

Assemble the downrod

Step 1. Pass the canopy, the canopy holder and the hub cover through the downrod.

Step 2. Route wires through the downrod.

Step 3. Loosen the set screws from the downrod hub but do not take off. Align the holes at the bottom of the downrod with the holes in the downrod hub. Carefully insert the clevis pin through the holes in the collar and downrod. Be careful not to jam the clevis pin against the wires inside the downrod. Insert the "R" pin into the end of the clevis pin.

Step 4. Fix the downrod with the set screws on the hub.

Install the Remote Holder

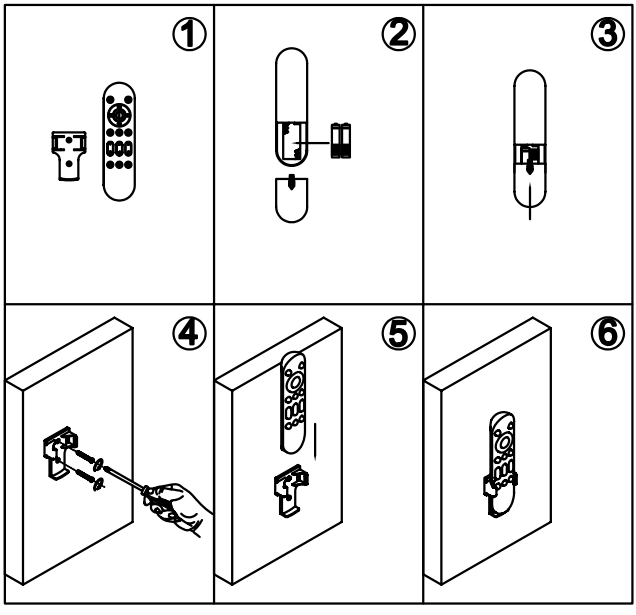

1. Insert 2 batteries before using:
AAA 1.5V battery x 2pcs (not included)
2. Install the remote holder onto the wall with screws.

Installation Step 3 (Mount the Bracket)

Option 1

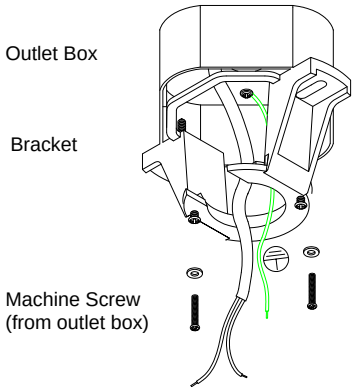

OR

Option 2

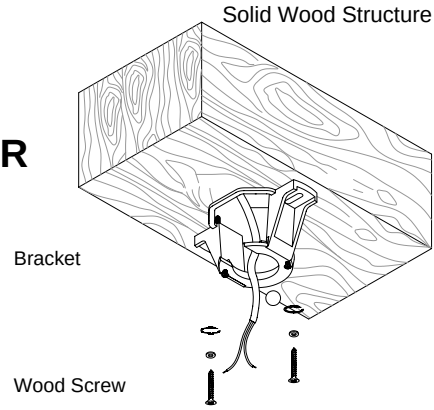

Option 1: With Outlet Box

Fix the mounting bracket onto the outlet box with screws from the outlet box.

Option 2: Without Outlet Box

Fix the mounting bracket onto the solid wood structure with 2 wood screws, or fix the mounting bracket with 2 expansion screws.

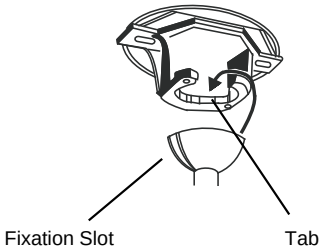

1. Hang the Fan

Lift the downrod into the mounting bracket. Rotate the downrod until the tab in the mounting bracket is seated in the fixation slot in the downrod ball.

2. Wire the Fan

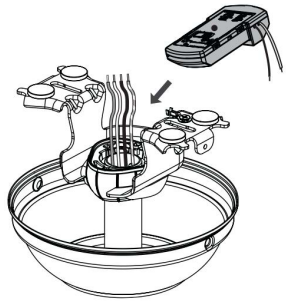

Step 1. Insert the remote receiver to the bracket.
Step 2. Connect the two wires from the receiver to the fan wires, color matching.
Step 3. Connect the receiver black wire to your house live wire, white wire to your neutral wire, copper wire from the downrod to your ground wire.
Step 4. After connecting the wires, spread them apart so that the live wires are on one side of the outlet
Step 5. Tighten the canopy holder to secure canopy to the ceiling. Tighten all screws securely.

08 Remote Control Instructions

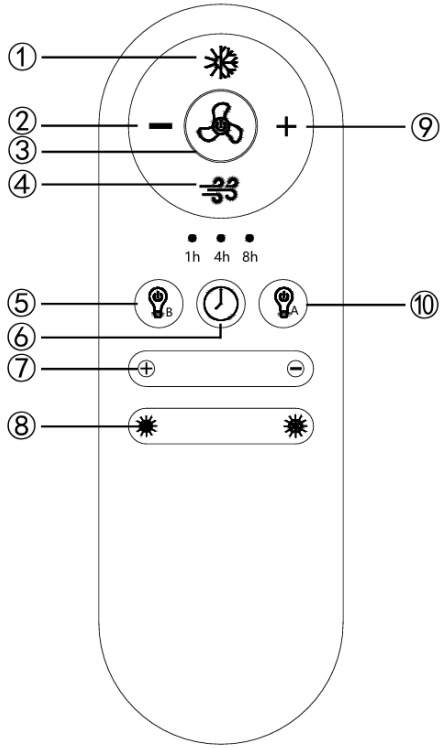

NOTE:
Please insert 2 batteries before using.
AAA 1.5V battery x 2pcs (not included)

① Fan moves forwards or reversely.
②⑨ Adjust the fan speed.
③ Turn on/off the fan.
④ Natural wind of the fan, fan speed will change automatically when use this function.
⑤ Turn on/off the light.
⑥ Timing for 1/4/8 hours for the fan.
⑦ Adjust the light color temperature.
⑧ Adjust the brightness of the light.
⑩ Turn on/off the secondary light source.（This product does not have this feature）

SETUP: remote signal pairing. If the remote control looses signal of the fan, press and hold ③ button at the very beginning after it's powered on from wall switch. After the fan flashes or beeps, it's paired successfully.

1. Fan doesn't work

• Make sure the fan lamp is connected to an ON/OFF wall switch, not dimmer switch.
• Check the remote control battery (not included in this package).
• Check the circuit breaker to ensure the power is on.
• Turn off power from the circuit breaker, then loosen the canopy and check all the connections according to the wiring diagram.

2. Lights Do Not Light Up / Flicker / Noisy Operation

• Make sure the fan lamp is connected to an ON/OFF wall switch, not dimmer switch.
• Check your power and switch to make sure it's power on.

3. Noisy Operation

• Re-tighten all screws on bracket.
• Check to see if any of the blades are cracked. If so, replace the blades.

4. Remote does not work

• Make sure the battery is installed correctly.
• Pair the remote control again (See page **08**).
• Install 2 new batteries.

Clean And Care

To clean, wipe the fan lamp with soft cloth. Spray from chemical cleaners can discolor the surface of the fan lamp. Do not use scouring pads, powders, steel wool or abrasive paper to clean this fan lamp.

Ordering Parts

Keep this manual for future reference, and in case replacement parts are needed. Available parts can be ordered from place of purchase. Use exact wording from diagrams when ordering parts.