Gas Range Manual
for Installation, Care, & Maintenance

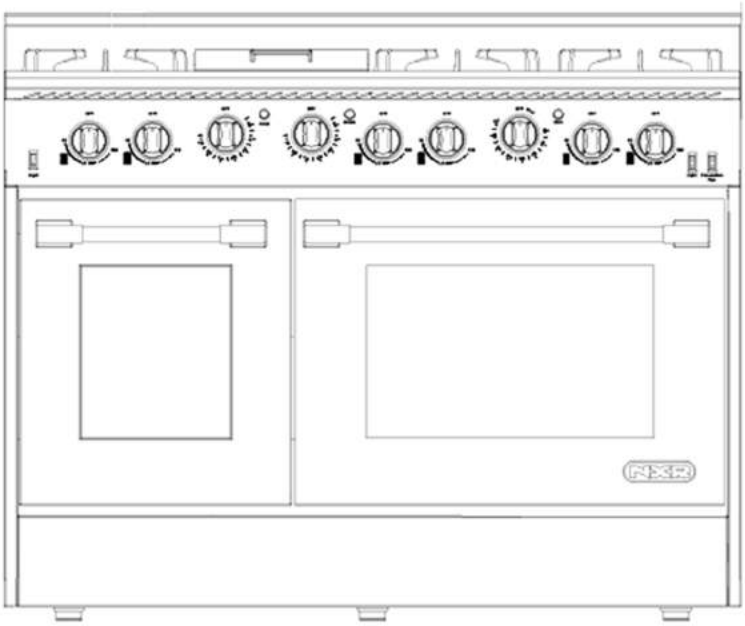

NK3011 NK3611 NK4811

DURO CORPORATION

Thank you and congratulations for purchasing your NXR indoor range.

We recommend that you read this entire User's Manual before operating your new appliance for the first time.

This manual contains instructions on how to properly install and set up your new range, as well as insights into the unique features that our product offers. Please keep this manual for future reference, as it contains answers to questions that you might have as you begin to cook.

Your complete satisfaction is our ultimate goal. If you have any questions or comments about this product, please contact our customer service at 1-888-909-8818.

We appreciate your choice and hope that you will again select our products for your other major appliance needs.

Thank you,

Duro Corporation

WARNING

If not installed, operated, and maintained in accordance with the manufacturer's instructions, this product could expose you to fuel or fuel combustion substances, which can cause death or serious illness and which are known to the State of California to cause cancer, birth defects, or other reproductive harm.

The State of California enacted the California Safe Drinking Water and Toxic Enforcement Act of 1986, (Prop. 65), which "prohibits any person in the course of doing business from knowingly and intentionally exposing any individual to a chemical known to the State of California to cause cancer or reproductive toxicity without first giving clear and reasonable warning to such individuals." The Governor's Scientific Advisory Panel added carbon monoxide to the list of hazardous chemicals known to cause reproductive harm.

In order to establish full compliance with Proposition 65, a yellow warning label has been attached to each gas-fired unit manufactured by Duro Corporation.

Carbon monoxide would not be present in concentrations that would pose a "significant risk" to the consumer when the equipment is installed, operated, and maintained as follows:

1. Installed in accordance with all local codes, or in the absence of local codes, with the current National Fuel Gas Code ANSI Z223.1 Latest Addenda.
2. Installed under a properly designed and operating exhaust hood.
3. Connected to the type of gas for which the unit is equipped.
4. Proper appliance pressure regulator installed on the gas supply line and adjusted for the manifold pressure marked on the rating plate.
5. Adequate air supply to the unit.
6. The equipment is operated in the manner intended and using the proper utensil for that type of appliance.
7. Keep the equipment cleaned and have it checked periodically.
8. Burner air adjustments, mechanical maintenance and repairs must be performed by qualified service personnel.

WARNING: If the equipment is not installed, operated, and maintained in accordance with the above requirements, concentrations of carbon monoxide in excess of the established limits could be present in the kitchen environment.

ALL PERSONNEL IN THE WORLDPLACE WHO MAY BE SUBJECT TO ANY EXPOSURE OF CARBON MONOXIDE MUST BE WARNED OF SUCH POSSIBLE EXPOSURE. THIS WARNING SHOULD BE CONVEYED IN A MANNER SO THAT IT IS CLEARLY UNDERSTOOD BY THE EMPLOYEE. THE EMPLOYEE MUST BE ASKED IF IN FACT HE OR SHE UNDERSTANDS THE CORRECT METHOD OF PERATION OF THE EQUIPMENT AND THAT A RISK OF EXPOSURE EXISTS IF THE EQUIPMENT IS OPERATED IMPROPERLY.

SAFETY INSTRUCTIONS

Definitions

This is a safety alert symbol. It will alert you to potential personal or property safety hazards. Obey all safety messages to avoid any property damage, personal injury or death.

WARNING

WARNING indicates a potentially hazardous situation which, if not avoided, could result in serious injury or death.

CAUTION

CAUTION indicates a moderate hazardous situation which, if not avoided, could result in minor or moderate injury.

CAUTION

CAUTION – when used without the safety alert symbol, indicates a potentially hazardous situation which, if not avoided, could result in property damage.

IMPORTANT

IMPORTANT – used for installation, operation, and maintenance information that are not related to safety.

If the information in this manual is not followed exactly, a fire or an explosion may result causing property damage, personal injury, or even death.

Do not store or use gasoline, liquid propane cylinder, or other flammable vapors, and liquids in the vicinity of this appliance.

Save this manual for future references.

SAFETY INSTRUCTIONS

What to do if you smell gas?

- Do not try to light any appliance.
- Do not touch any electrical switch.
- Do not use any phone in your residence.
- Immediately call your gas supplier from a neighbor's phone. Follow the gas supplier's instructions.
- If you cannot reach your gas supplier, call the fire department.

IMPORTANT

The installation and service of your range product must be performed by a licensed installer, an approved service agency, or your gas supplier.

WARNING

All ranges can tip and cause injuries.
Install anti-tip device packaged with range.
Follow all installation instructions.
Make sure the anti-tip bracket is installed:
Slide range forward.

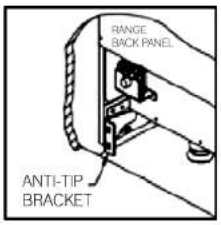

Make sure the anti-tip bracket is securely attached to the wall behind the range.
Safely tilt the front of the range upward slightly and move back against the wall, making sure the pin slides under the bracket.

SAFETY INSTRUCTIONS

⚠ WARNING

Do not store or use gasoline, liquid propane cylinder, or other flammable vapors and liquids in the vicinity of this appliance.

The installation and service of your range must be performed by a qualified installer, an approved service agency, or the gas supplier.

Gas appliances can cause minor exposure to four of these substances, namely benzene, carbon monoxide, formaldehyde and soot, caused primarily by the incomplete combustion of natural gas fuel. When operating your range on natural gas, the flames from the burners should be blue in color. In addition, the flames should be stable, free of yellow tipping, excessive noise and lifting. However, this yellow tipping should be restricted to the primary flame kernels only. Properly adjusted burners, indicated by a bluish flame rather than a yellow flame, will minimize incomplete combustion. Exposure to those substances can be minimized by venting with an open window or use of a ventilation fan or hood.

ELECTRICAL GROUNDING INSTRUCTIONS

IMPORTANT

This indoor cooking appliance is equipped with a three-prong (grounding) plug for your protection against shock hazard and should be plugged directly into a properly grounded three-pronged receptacle. DO NOT cut or remove the grounding prong from this plug.

INSTALLATION INSTRUCTIONS

⚠ WARNING

To ensure proper and safe operation, read all instructions before using the product. Install or locate the product only in accordance with the provided Installation Instructions.

- Do not attempt to adjust, repair, service or replace any part of your appliance unless it is specifically recommended in this guide.
- Do not use the range for warming or heating the room.
- Do not leave children along or unattended in the area where the range is in use. Never allow to sit or stand on any part of the range. Do not let children play with the range.
- All servicing should be referred to a qualified technician.
- Have the technician show you the location of the gas shut off valve and how to shut it off in an emergency situation.
- Always disconnect power to appliance before any type of servicing.
- Do not use abrasive or caustic cleaners or detergents on this appliance. They may cause permanent damage to the surface.
- When cooking, set the burner controls so that the flame heats only the bottom of the utensil and does not overlap at the sides of the utensil.
- Utensils (pots and pans) that conduct heat slowly, i.e. glass pots, should be used in conjunction with burner flames at a low or medium setting.
- Turn off all controls and wait for appliance parts to cool down before touching them.
- Do not touch the burner grates or surrounding areas until cool.
- Do not use water on grease fires.
- Clean appliance with caution.
- Always turn pot handles to the side or back of the range. Do not turn handles towards the area where they are easily burned. Handles should not extend over the adjacent burners.
- Use the range only for cooking tasks as outlined in this manual. When using the range, do not touch the grates, burner caps, burner bases, or any other parts in proximity to the flame.
- These components may be hot enough to cause burns.
- Use dry pot holders. Moist or damp pot holders on hot surfaces may result in burns from steam.
- Do not let pot holder touch hot surface areas.
- Do not use a towel or other bulky cloth.
- Do not heat unopened food containers. Buildup of pressure may cause the container to explode and result in injury.
- During and after use, do not touch interior surfaces of the oven until cool.

INSTALLATION INSTRUCTIONS

Gas Supply Requirements

Installation of this range must conform with local codes, or in the absence of local codes, then national Fuel Gas Code, ANSIZ223.1 / NFPA 54. In Canada, installation must conform to the current natural Gas Installation / code, CAN 1-1.1-M81 and with local codes where applicable. This range has been design-certified according to ANSI Z21.1B-2012 latest edition.

A statement of the maximum gas supply pressure in accordance with the inlet pressure rating of the appliance pressure regulator supplied.

MINIMUM GAS SUPPLY PRESSURE TO APPLIANCE FOR LP GAS --- 14.0 IN.W.C.
MINIMUM GAS SUPPLY PRESSURE TO APPLIANCE FOR NG --- 6.0 IN.W.C.

APPLIANCE REGULATOR IS SET AT 5.0 IN. W.C. OUTLET PRESSURE.

Keep appliance area clear and free from combustible materials, gasoline, and other flammable vapors.

Do not obstruct the flow of combustion air into the range and ventilation air away from the range.

Ventilation: it is recommended that the unit be set under a powered, vented exhaust hood of sufficient size and capacity.

Before installing the range, you must locate and secure the included anti-tip bracket to the wall of your range.

⚠ CAUTION

The use of cabinets for storage above the appliance may result in a potential burn hazard. Combustible items may ignite; metallic items may become hot and cause burns. If a cabinet storage is to be provided, the risk can be reduced by installing a range hood that projects horizontally a minimum of 5" (12.7cm) beyond the bottom of the cabinets.

⚠ WARNING

The appliance shall not be used for space heating. This information is based on safety considerations. All openings in the wall behind the appliance and in the floor under the appliance shall be sealed.

INSTALLATION INSTRUCTIONS

Dimensions and Clearances

The range may be installed flush to the rear wall. You may install a non-combustible material on the rear wall above the range and up the vent hood. It is not necessary to install non-combustible materials behind the range below the counter top height.

The minimum distance from the side of the range above the counter top to combustible sidewalls must be at least 10 inches.

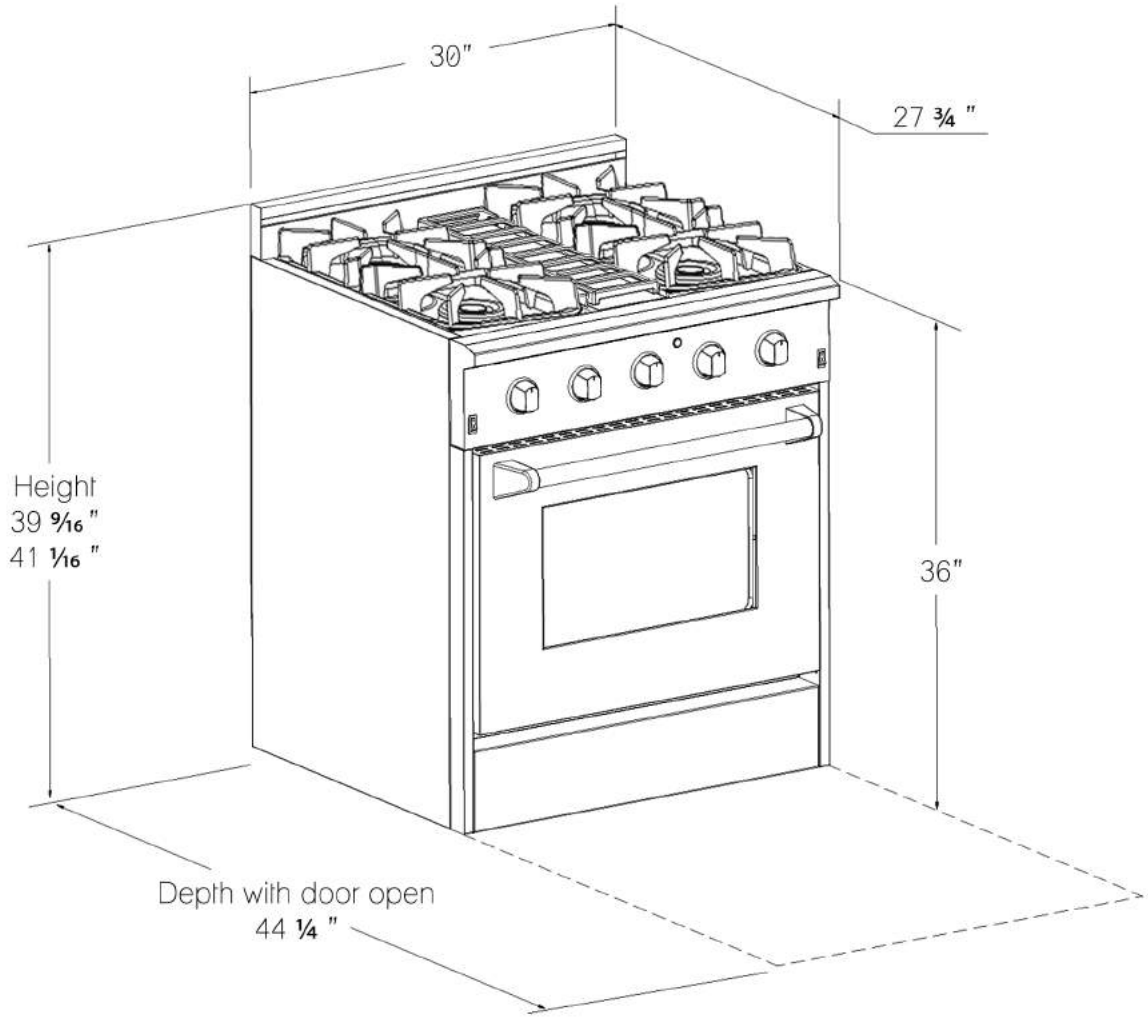

INSTALLATION INSTRUCTIONS

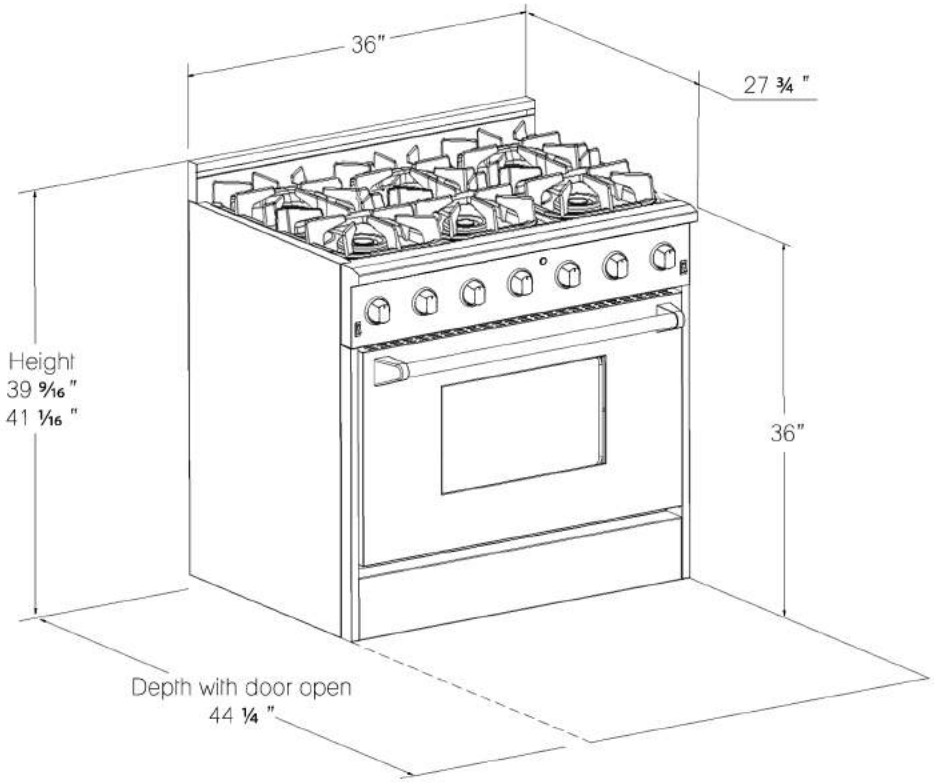

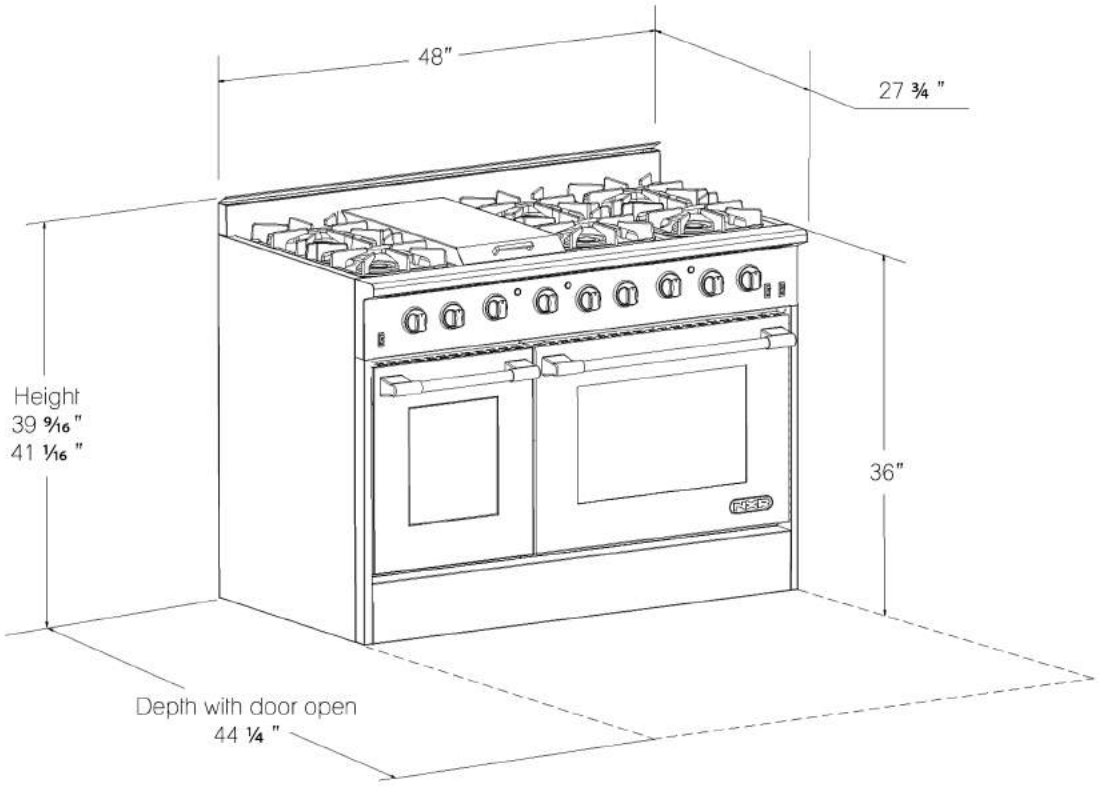

INSTALLATION INSTRUCTIONS

The maximum depth of cabinets installed above cooking tops should be 13 in (330mm).

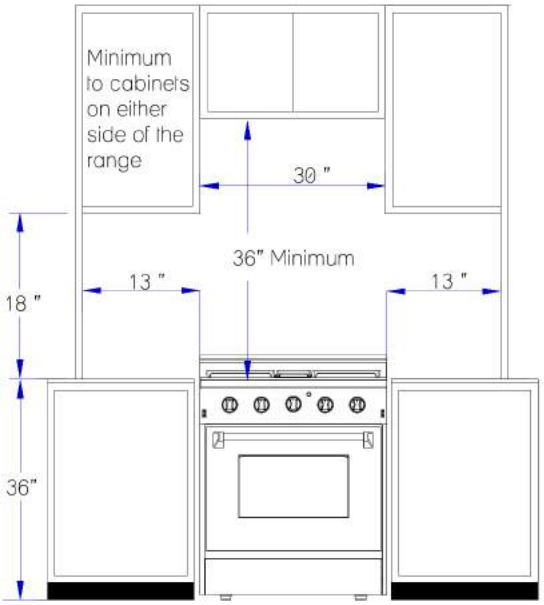

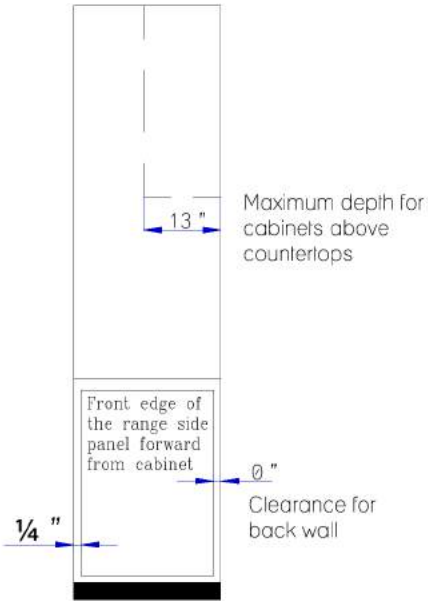

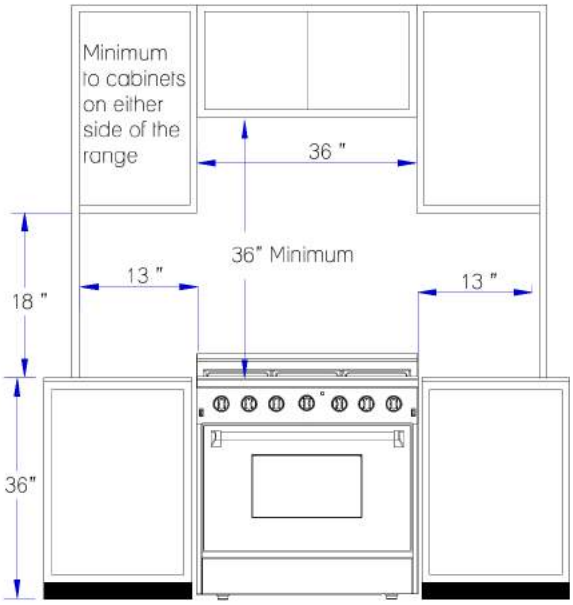

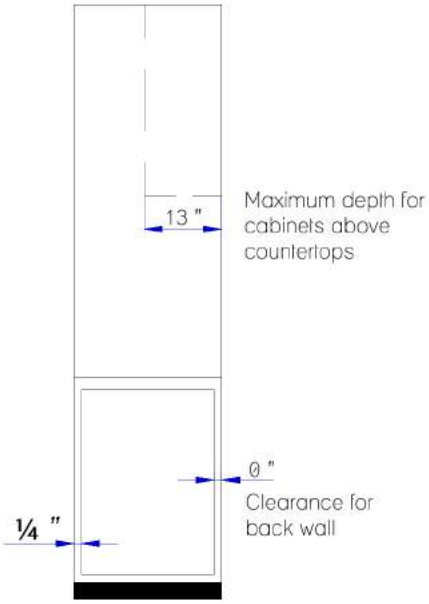

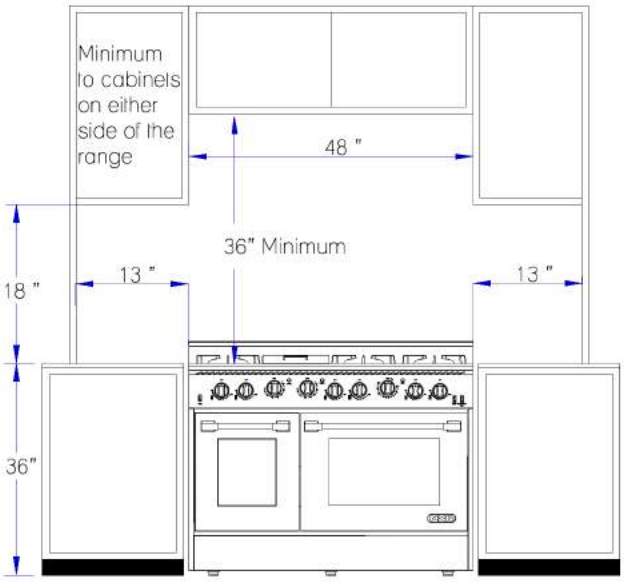

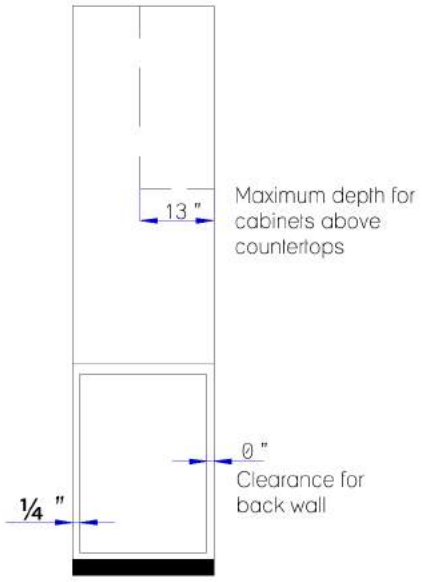

Electric Power Supply Requirements

Your range must be electrically grounded in accordance with local codes or, in the absence of local codes, in accordance with the National Electrical Code (ANSI/NFPA 70, latest edition). In Canada, electrical grounding must be in accordance with the current CSA C22.1 Canadian Electrical Code Part 1 and/or local codes. A copy of this standard may be obtained from: National Fire Protection Association, 1 Battery march Park, Quincy, Massachusetts 02269-9101.

The power supply must be the correct polarity. Reverse polarity will result in continuous sparking of the electrodes, even after flame ignition. If there is any doubt as to whether the power supply has the correct polarity or grounded, have it checked by a qualified electrician.

Use 120V, 60Hz, and properly grounded branch circuit protected by a 15-amp or 20-amp circuit breaker or time delay fuse.

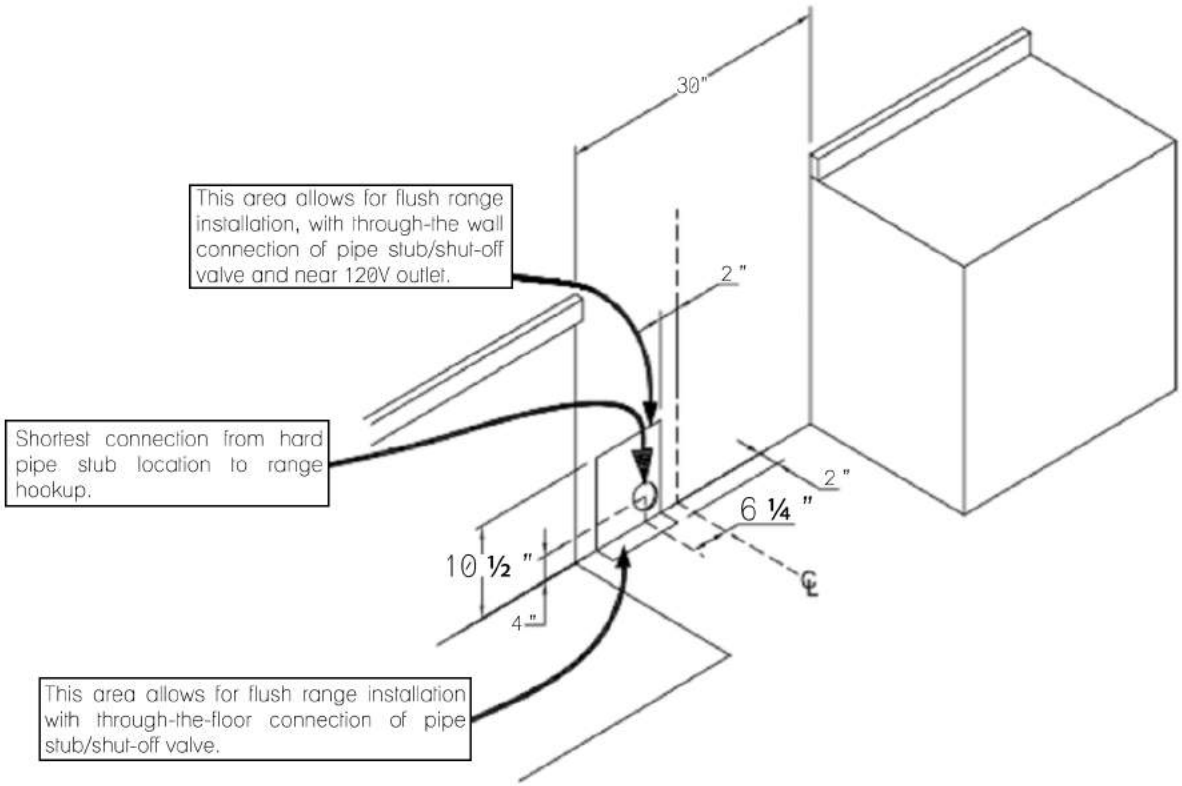

Grounding

1. The power cord is equipped with a three-prong (grounding) plug which matches with a standard three-prong grounding wall receptacle to minimize the possibility of electrical shock hazard from the range.

2. All cord connected appliance shall include instructions relative to location of the wall receptacle and a warning to the user to disconnect the electrical supply before serving the appliance.

3. Where a standard two-prong wall receptacle is encountered, it is the responsibility and obligation of the customer to have it replaced with a properly grounded three-prong wall receptacle. Do not cut or remove the grounding prong from the power cord.

INSTALLATION INSTRUCTIONS

Connect Range to Gas Supply

1. Install a manual gas line shut-off valve in the gas line in an easily accessed location outside the range in the gas piping external to the appliance for the purpose of turning on or shutting off gas to the appliance.

2. Install a manual valve in an accessible location in the as line external to the appliance for the purpose of turning on or shutting off gas to the appliance.

3. Install male ½" flare union adapter to the ½" NPT internal thread elbow at the inlet of regulator. On models equipped with standard twin burners, install the male pipe thread end of the ½" flare union adapter to the ½" NPT internal thread at inlet of pressure regulator. Use a wrench on the regulator fitting to avoid damage.

4. Install male ½" or ¾" flare union adapter to the NPT internal thread of the manual shut-off valve, taking care to secure the shut-off valve to keep it from turning.

5. The gas supply pressure for checking the regulator setting is 6in (natural gas) and 11 in (liquid propane gas) connect flexible gas line connector to the regulator on the range. Position range to permit connection at the shut-off valve.

6. When all connections have been made, check all range controls are in the "off" position and turn on main gas supply valve.

7. Leak testing of the appliance shall be conducted according to the manufacturer's instructions. Use some soup water (50% water and 50% soup) or a leak detector at all joints and connections to check for leaks in the system. Do not use a flame to check for gas leaks.

INSTALLATION INSTRUCTIONS

The appliance must be isolated from the building's gas supply piping system by closing its individual manual shut-off valve during any pressure testing of the gas supply piping system at test pressure equal to or less than ½ psig (3.5Pa).

Hood/Composite Overlay Install

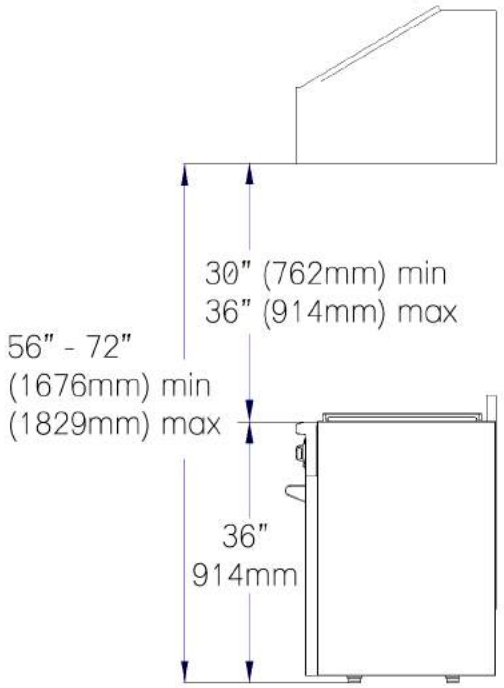

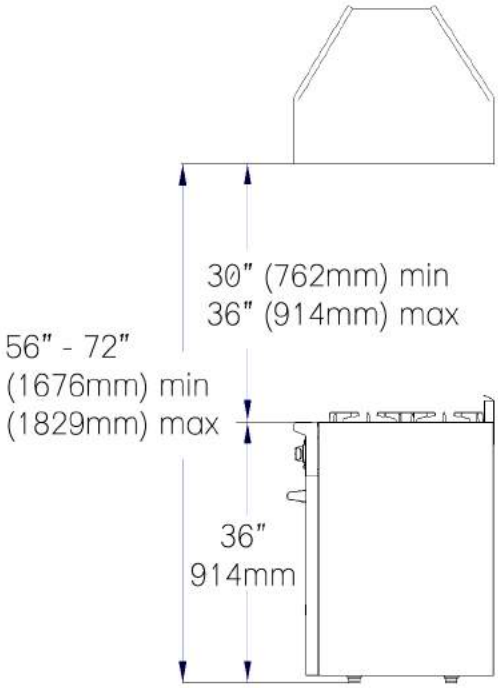

The bottom of the hood should be 30" min. to 36" above the counter top. This would typically result in the bottom of the hood being 66" to 72" above the floor. These dimensions provide safe and efficient operation of the hood.

After Installation:

Check ignition of cooktop burners.
Check ignition of oven burner.
Visually check tubular burner (oven burner) re-ignition to be sure both rows of burner ports are relighting each time.
Check for gas leaks at all gas connections (using a gas detector, never a flame).

COOKTOP OPERATION

Surface Burner Ignition

Push to release gas.

Turn to 'Ignite' Position.

Adjust to appropriate lame height.

To light the surface burners, push and turn the appropriate control knob counter clockwise to the "HI" position. You will hear a clicking noise – the sound of the electric spark igniting the burner. Once burner ignition has been achieved, turn the burner control knob to adjust the desired heat setting.

NOTE: When one burner is turned to the "HI" position, all the burner igniters will spark. Do not attempt to disassemble or clean around any burner while another burner is on. Do not touch any burner cap, burner base, or igniter while the igniters are sparking.

Heat Settings

High	Ignites the burners.
Simmer	Melting small quantities, steaming rice, warming food, melting chocolate or butter.
Low	Melting large quantities.
Low-Medium	Low-temperature frying, simmering large quantities, heating milk, cream sauces, gravies.
Medium	Sautéing and browning, braising, pan-frying, maintaining slow boil on large quantities.
Medium – High	High-temperature frying, pan boiling, maintaining slow boil on large quantities.
High	Boiling liquid quickly, deep frying.

COOKTOP OPERATION

Simmer and Boil

• A smaller flame will give the best simmer results. Small flames offer precise cooking performance for delicate foods, keep food warm, melting chocolate or butter, and for food that need to cook over low heat for a long time.

• The highest (larger) flame settings provide the maximum heat that is available on your range. This setting should be used for heavy cooking loads such as water boiling or pasta cooking.

Flame Size

• When you select the flame size, watch the flame when you turn the knob.

• Any flame larger than the bottom of the cookware is wasted.

• The flame should be steady and blue in color. Foreign material in the gas line may cause an orange flame during initial operation.

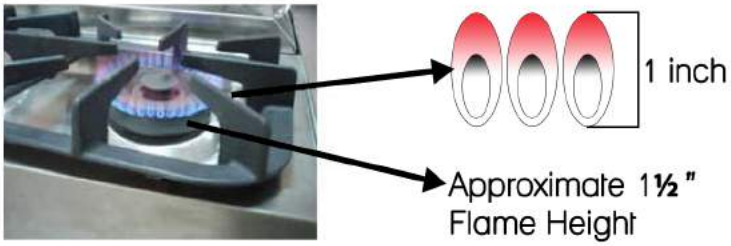

Power Failure

• If the gas does not ignite within four seconds, turn off the valve and allow at least five minutes for any gas to dissipate. Repeat the lighting procedure.

• If the power fails, the surface burners can be lighted manually. Hold a lighted match near a burn and turn the knob counterclockwise to "Hi." After burner lights, turn knob to setting.

• If the power fails, it is not capable of being safely placed in operation. No attempt should be made to operate during power failure.

Cooktop

• To prevent the cooktop from discoloring or staining, clean cooktop after each use, and wipe up acidic or sugary spills as soon as the cooktop has cooled.

• The sealed burners of your range are not sealed to your cooktop and are designed to be removed. Boil over or spills will not seep underneath the cooktop. The burners should be cleaned after each use.

COOKTOP OPERATION

Oven Vent

Do not block the ducts on the rear of the range when cooking in the oven. It is important that the flow of hot air from the oven and fresh air into the oven burner never be interrupted. Avoid touching the vent opening or nearby surfaces during oven or broiler operation – they may become hot.

⚠ WARNING

FOOD SAFETY – According to the United States Department of Agriculture: DO NOT hold foods at temperatures between 40ºF to 140ºF for more than 2 hours. Cooking raw foods below 275ºF is not recommended.

⚠ WARNING

Never use this appliance as a space heater to heat or warm the room.
Doing so may result in carbon monoxide poisoning and overheating of the oven.
Never use this appliance as storage space and storage cabinet areas.

⚠ WARNING

Never step, lean, or sit on the appliance doors or drawers.
Doing so may result in hazards and injuries.

Burner Grates

The grates must be properly positioned before cooking. Improper installation of the grates may result in scratching of the cooktop and/or poor combustion.
Do not operate the burners without a pan or utensil on the grates.

OVEN OPERATION

⚠ WARNING

Never cover any slots, holes, or passages in the oven bottom or cover an entire rack with materials such as aluminum foil. Doing so blocks air flow through the oven and may cause carbon monoxide poisoning. Aluminum foil lining may also trap heat, causing a fire hazard.

Oven Function

Natural Airflow Bake occurs when heat is transferred into the oven from the bake burners in the bottom of the oven cavity. Heat is then circulated by natural airflow. This is a traditional bake setting.

Infrared Broil

The broil burner is located at the top of the oven. This burner heats the metal screen until it glows. The glowing screen produces the infrared heat, searing the outside of broiled foods and sealing in juices.

Convection Bake

Heat is transferred from the bake burners in the bottom of the oven cavity to the oven cavity itself. The convection fan in the rear of the oven then circulates it. This convection process provides more even heat distribution throughout the oven cavity. Multiple rack use is possible for the largest baking job. Convection cooking is faster, can be accomplished at lower temperatures, and provides more even temperatures than with regular cooking.

OVEN OPERATION

Convection Roast

The convection fan circulates the heated air evenly over and around the food. Using the cover and broiler pan provided, heated air will be circulated around when the food is being roasted. The heated air seals in juices quickly for a moist and tender product while, at the same time, creating a rich golden brown exterior. When convection roasting, it is important that you use the broiler pan for best convection roasting results. The pan is used to catch grease spills and has a cover to prevent grease splatters.

Convection Defrost

With temperature control off, a motorized fan in the rear of the oven circulates air. The fan accelerates natural defrosting of the food without heat. To avoid illness and food waste, do not allow defrosted food to remain in the oven for more than two hours without being cooked.

Convection Dehydrate

With the temperature control on 175ºF, warm air is radiated from the bake burners in the bottom of the oven cavity and is circulated by a motorized fan in the rear of the oven. Over a period of time, the water is removed from the food by evaporation. Removal of water inhibits growth of microorganisms and slows down the activity of enzymes.

BROILER OPERATION

NOTE: Door must be closed during broiler operation

Broiling is a method of cooking tender cuts of meat directly under the infrared broiler in the oven. Broiling in the oven is accomplished with the oven door closed. It is normal and necessary for some smoke to be present to give the food a broiled flavor.

Preheating

Preheating is suggested when searing rare steaks (Remove the broiler pan before preheating with the infrared broiler. Food will stick on hard metal). To preheat, turn the "Oven" selector knob to the "Broil" position. Wait for the burner to become hot, approximately 2 minutes. Preheating is not necessary when broiling meat well-done.

To Broil

Broil one side until the food is browned; turn and cook on the second side. Season and serve. Always pull the rack out to the "stop" position before turning or removing food.

Setting Broil

The "Oven" selector knob controls the Broil feature. When broiling, heat radiates downward from the oven broiler for even coverage. The Broil feature temperature is 500°F (260°C).
The broil pan and insert used together allow dripping grease to drain and be kept away from the high heat of the oven broiler. DO NOT use the broil pan without the insert. DO NOT cover the broil pan insert with foil. The exposed grease could catch fire.

To set the oven to Broil

1. Place the broiler pan insert on the broiler pan. Then place the food on the broiler pan insert.
2. Arrange the interior oven rack and place the broiler pan on the rack. Be sure to center the broiler pan and position directly under the broil burner. If preheating the broil burner first, position the broiler pan after the broil burner is preheated.
3. Turn selector knob to Broil.

The oven indicator light will remain on until the selector knob is turned to the off position or the temperature control cycles off.

GRIDDLE OPERATION

Before Using the Griddle

1. Clean the griddle thoroughly with warm, soapy water to remove dust or any protective coating
2. Rinse with clean water and wipe off to dry with soft, clean, lint-free cloth.
3. A stainless steel cover that is sized to fit on top of the surface when the griddle is not being used is provided. Please note that the cover must be removed before turning the griddle on.
4. Make sure the grease tray is under the front edge of the griddle. Position the tray under the griddle overhang to catch grease or food residue.

Using the Griddle

1. Push and turn the control knob counter-clockwise to the preferred cooking temperature.
2. Preheat the griddle for 10-12 minutes.
3. When the griddle is preheated to the desired temperature, the indicator light will turn on.
4. Butter or cooking oil can be added for more flavor, then place the food to cook.

CAUTION

The surface of the griddle is hot after use. Please allow sufficient time for the griddle to cool prior to cleaning.

WARNING

When using the appliance for the first time, the oven and broiler burners should be turned on to burn off the manufacturing oils. Turn the oven on to 450°F (230°C) for 20 to 30 minutes. Then turn the oven control knob to "Broil" for the same length of time. It is recommended to turn on the ventilator above the range at this time.

WARNING

An appliance equipped with a top surface cooking section cover is not intended to be closed during appliance operation. Top cover must be open when main burner is in operation.

CARE AND CLEANING

Cooktop

- To avoid electrical shock or burns, turn off controls and ensure the cooktop is cool before cleaning.
- Before cleaning the cooktop, ensure that all burners are turned off and that all components are cool enough to safely touch.
- Do not use harsh or abrasive cleaning agents, waxes, polishes, or commercial cooktop cleaners to clean the cooktop.
- Use only a sponge, soft cloth, fibrous or plastic brush, and nylon pad for cleaning.
- Always dry components completely before using the cooktop.

Control Panel, Door Handle, Control Housing

- Clean the control panel, door handle and control housing with a solution of mild detergent and warm water.
- Do not use abrasive cleaners or scrubbers; they may permanently damage the finish.
- Dry the components with a soft, lint-free cloth.

Oven Window

- Clean all glass surfaces with a solution of mild detergent and hot water. Use a mild glass cleaner to remove fingerprint or smears.
- Dry completely with a soft, lint-free cloth.

Porcelain Surfaces

- Clean oven interior and inner door liners with a solution of mild detergents and hot water.
- Rinse and dry with a soft, lint-free cloth. Do not use abrasives or commercial oven cleaners.

Stainless Steel Surfaces

- Do not use any cleaning product with chlorine bleach.
- Do not use a steel wool pad; it will scratch the surface.
- Use a hot, damp cloth with a mild detergent. Use a clean, hot, damp cloth to remove soup. Dry with a dry, clean cloth.

⚠ WARNING

Electrical Grounding Instructions: This indoor gas cooking appliance is equipped with a three-prong (grounding) plug for your protection against shock hazard and should be plugged directly into a properly grounded three-pronged receptacle. DO NOT cut or remove the grounding prong from the plug.

⚠ CAUTION

Label all wires prior to disconnection when servicing controls. Wiring errors can cause improper and dangerous operation. Verify proper operation after servicing.

CARE AND CLEANING

Metal Finishes

- Wash with soap and water, glass cleaner, or mild liquid spray.

Plastic Finishes

- When control panel trim and end caps are cool, clean with soap and water, rinse and dry.
- Use a glass cleaner and soft cloth.

Oven Racks

- Clean oven racks with solution of detergent and hot water. To clean heavy soil, use a scouring pad such as steel wool, with plenty of water.

Oven Flame

- Clean with hot water, soap-filled steel wool pads or cleaners. Rinse well with clean water and dry.

Oven Gasket

- Do not clean the gasket. The fiberglass material of the oven door gasket cannot withstand abrasion.
- It is necessary for the gasket to remain intact.

Replacing the Oven Light

- Turn off the power at the main power supply.
- Remove the lens cover from the housing by pulling straight out.
- To prevent electrical shock or personal injury, make sure the oven and light bulb are cool and power to the oven has been turned off before replacing the light bulb. Make sure the lens cover is in place when using the oven.

Outer Oven Door

- Use soap and water to thoroughly clean the top, sides, and front of the oven door. Rinse well. You may also use a glass cleaner to clean the glass on the outside door.
- Do not use oven cleaners, cleansing powder, or harsh abrasives on the outside of the door.

Inner Oven Door

- Do not allow excess water to run into holes or slots in the door. Any soap left on the liner causes additional stains when the oven is heated.
- Before you call for service, please review the potential problem, possible causes, and remedies shown in the table below.

TROUBLESHOOTING

PROBLEM	POSSIBLE CAUSE	REMEDY
Nothing works	Oven is not connected to the electrical power. Power supply is not energized.	Have oven connected to a properly sized electrical power supply by a qualified electrician. Have an electrician check the power supply, including the house circuit breaker, wiring and fuses.
Top burners do not light or do not burn evenly	Plug on range is not completely inserted in the electrical outlet. Burner holes on the side of the burner may be clogged.	Make sure the unit is properly connected to the power supply Remove the burner heads and clean them. Check the electrode area for burned-on food or grease.
Burner flames very large and yellow	Burner bezel ports are clogged. Burner ports or burner caps are not positioned properly. Cooktop is being operated with the wrong type of gas. Regulator is not installed, is faulty, or is set for the wrong type of gas.	Clean burner bezel ring ports with straightened paper clip, needle, or wire. Remove and carefully re-install burner bezel and caps. Ensure that the type of cooktop matches the natural gas supply. Check installation, replace regulator, or set regulator for proper gas.
Sparking but no flame ignition	Gas shut-off valve is in the 'OFF' position.	Turn shut-off valve to the 'ON' position.
Igniters spark continuously after flame ignition	Power supply polarity is reversed. Igniters are wet or dirty.	Have polarity corrected. Dry or clean igniters.
Burner flame goes out at low setting	Low gas supply pressure. Air intake holes around knobs are obstructed.	Contact gas company. Remove obstruction.
Oven will not heat	Oven settings are not corrected.	Follow mode selection and clock settings as specified in Oven Operation section of the manual.
Foods over-cooked or under-cooked	Incorrect cooking time or temperature.	Adjust time, temperature, or rack position.
'Cracking' or 'Popping' sound	This is the sound of metal heating and cooling.	This is normal.

MANUFACTURER'S LIMITED WARRANTY

This product has been manufactured by Duro Corporation located in 17018 Evergreen Place, City of Industry, CA 91745.

Duro Corporation disclaims all express warranties except for the following:
This warranty applies to products purchased and located in the United States. Products purchased or located outside this area are excluded.

The warranty does not apply to damage resulting from abuse, accident, natural disaster, loss of electrical power to the product for any reason, alteration, outdoor use, improper installation, and improper operation, repair or service of the product by anyone other than an authorized Duro Corporation, service agency, or representative.

Warranties and Duration

Full warranty for Parts and Labor: 1 year

Implied warranties terminate upon expiration of the limited warranty. Some states do not allow limitations on how long implied warranty lasts, so the above limitation may not apply to your implied warranty.

Duro will pay for:

All repair labor and cost of replacement parts found to be defective due to material and workmanship. Service must be provided by a Duro Authorized Service Agency during normal working hours. For a Service Agency nearest you, please call 1-888-909-8818.

MANUFACTURER'S LIMITED WARRANTY

Duro will not pay for:

1. Service to instruct you on how to use your range to correct house wiring, replace or repair house fuses. Service to correct the installation of your range.
2. Repairs when your range is used for other than normal, single-family household use or when it is used in a manner that is contrary to published user or operator instructions and/or installation instructions.
3. Cosmetic damage, including chips, dents, scratches or other damage to the finish of your range, unless such damage results from defects in materials or workmanship and is reported to Duro Corporation within 30 days from the date of purchase.
4. Costs associated with the removal from your home of your range for repairs. This range is designed to be repaired in the home and only in-home service is covered by this warranty.
5. Damage resulting from misuse, alteration, accident, abuse, fire, flood, acts of God, improper installation, installation not in accordance with electrical, or use of consumables or cleaning products not approved by Duro Corporation.
6. Service to repair or replace consumable parts. Consumable parts are not included in the warranty coverage.
7. The removal and reinstallation of your range if it is installed in an inaccessible location or is not installed in accordance with published installation instructions.
8. This warranty is void if the factory applied serial number has been altered or removed from your range.
9. Repairs to parts or systems resulting from unauthorized modifications made to the appliance.
10. Expenses for travel and transportation for product service if your range is located in a remote area where service by an authorized Duro Corporation servicer is not available.

The warranty applies to appliances purchased and used for personal, family or household purposes only. It does not cover appliances used for commercial applications. Should the appliance be sold by the original purchaser during the warranty period, the warranty shall extend to the new owner until the expiration date of the original purchaser's warranty period.

WARRANTY AND PRODUCT REGISTRATION

Duro is not responsible for incidental or consequential damages. Under no circumstances will Duro's liability exceed the cost that you paid for the product. Some states do not allow the exclusion or limitation of incidental or consequential damages, so the above limitations or exclusion may not apply to you.

This warranty gives you specific legal rights, and you may also have other rights that vary from state to state.

Whenever you call our customer service at 1-888-909-8818 (NEXRANGE) for technical information and parts sales in the United States or to request service for your appliance, please have your complete model number and serial number ready. The model and serial number can be found on the product data plate. Please enter the information requested in the spaces provided.

Model No. _____
Serial No. _____
Date Purchased _____
Date Installed _____
Purchased from _____
Address _____
Phone _____

Note: You must provide proof of purchased or installation date for in-warranty service.