SYMMONS® Temptrol®
the smart choice™

PRESSURE BALANCING TUB/SHOWER VALVE BODY SPECIFICATION SUBMITTAL

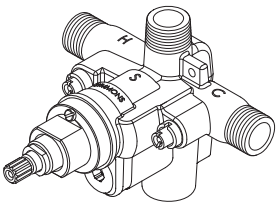

S262XBODY

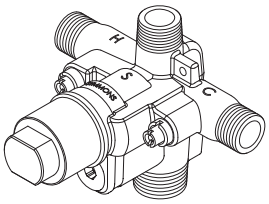

S162XBODY

MODEL NUMBERS

- ☐ **S262XBODY**
  Pressure Balancing tub/shower valve body with integral diverter and service stops
- ☐ **S162XBODY**
  Pressure Balancing tub/shower valve body with pressure testing cap, integral diverter and service stops

FEATURE HIGHLIGHTS

- Brass, bronze and stainless steel construction
- Pressure balancing mixing valve to maintain safe shower temperature
- Integral diverter control
- Adjustable stop screw to control maximum hot water temperature to valve
- Integral service stops allow water shut-off for valve servicing
- 4 port valve body in common plane
- Inlets: 1/2" IPS and 1/2" sweat
- Outlets: 1/2" IPS and 1/2" sweat
- Accommodates back to back installations
- Accommodates thin wall installations
- Stringer mounts included

OPTIONS/MODIFICATIONS

☐	**-BR**	Temptrol Rapid Install™ Bracket
☐	**-CHKS**	Integral check stops for use in installations where a positive shut-off device is used downstream of valve
☐	**-RV**	Reverse seat for back to back installations

INLET ADAPTERS

☐	**-CP**	CPVC fittings
☐	**-P1**	PEX crimp fittings
☐	**-P2**	PEX expansion fittings
☐	**-P3**	ProPress fittings

COMPLIANCE

- ASME A112.18.1/CSA B125.1
- ASSE 1016
- Buy American Act Compliant

WARRANTY

Limited Lifetime - to the original end purchaser in consumer installations.
5 Years - for commercial installations.
Refer to www.symmons.com/warranty for complete warranty information.

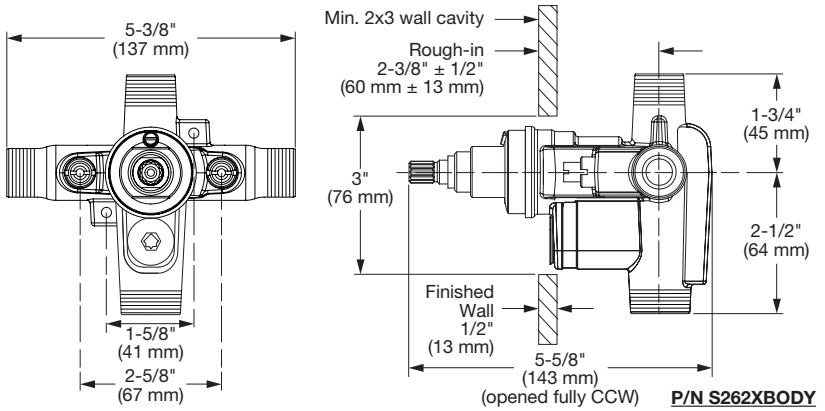

P/N S262XBODY

TEMPTROL RAPID INSTALL™ BRACKET

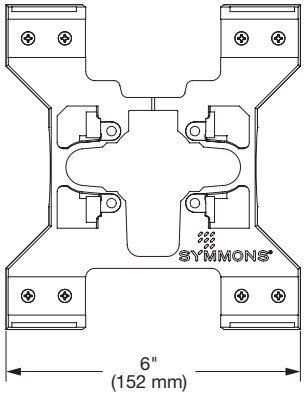

NOTES:
1) Min. 2x3 wall cavity
2) Rough-in 2-7/8" (73 mm)

P/N RTS-076

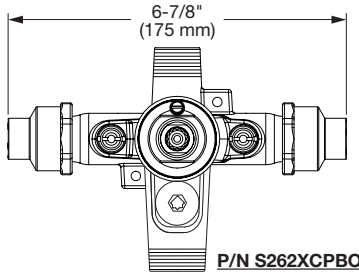

P/N S262XCPBODY

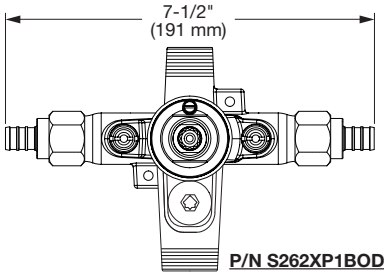

P/N S262XP1BODY

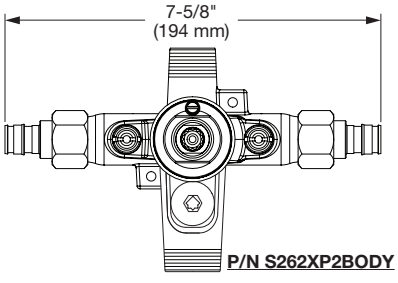

P/N S262XP2BODY

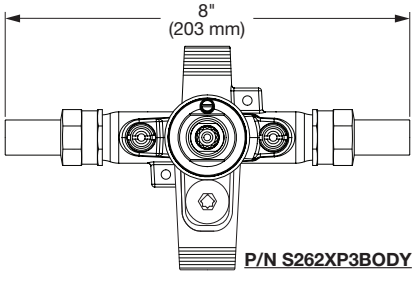

P/N S262XP3BODY

Symmons Industries, Inc. ▪ 31 Brooks Drive ▪ Braintree, MA 02184 ▪ Phone: (800) 796-6667 ▪ Fax: (800) 961-9621
Copyright © 2019 Symmons Industries, Inc. ▪ symmons.com ▪ gethelp@symmons.com ▪ ZV-1775 REV B ▪ 120619