TOOLS AND MATERIALS REQUIRED

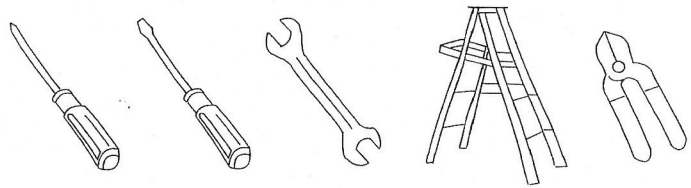

- Philips screw driver
- Blade screw driver
- 11 mm wrench
- Step ladder
- Wire cutters
- Wiring supplies as required by electrical code

GENERAL

After opening the ceiling fan box, you should find the following parts:

- Fan motor assembly
- Canopy(may with downrod) or mounting plate
- Blade set
- Blade bracket set
- Package hardware
- Wood tassels
- Light kit(optional)
- Glass shade(optional)

CEILING FAN
INSTALLATION & OPERATION INSTRUCTIONS

IMPORTANT SAFEGUARDS

1. To reduce the risk of electric shock, insure electricity has been turned off at the circuit breaker of fuse box before beginning.
2. All wiring must be in accordance with the National Electrical Code and local electrical codes. Electrical installation should be performed by a qualified licensed electrician.
3. WARNING: To reduce the risk of electrical shock and fire, do not use this fan with any solid-state fan speed control device.
4. CAUTION: To reduce the risk of personal injury, use only the two steel screws (and lock washers) provided with the outlet boxes.
5. The outlet box and support structure must be securely mounted and capable of reliably supporting a minimum of 50 pounds. Use only U.L. Listed outlet boxes marked "FOR FAN SUPPORT".
6. The fan must be mounted with a minimum of 7 feet from the trailing edge of the blades to the floor.
7. Do not operate reversing switch while fan blades are in motion. Fan must be turned off and blades stopped before reversing blade direction.
8. Avoid placing objects in the path of the blades.
9. To avoid personal injury of damage to the fan and other items, be cautions when working around or cleaning the fan.
10. Do not use water or detergents when cleaning the fan or fan blades. A dry dust cloth or lightly dampened cloth will be suitable for most cleaning.
11. After making electrical connections, spliced conductors should be turned upward and pushed carefully up into outlet box. The wires should be spread apart with the grounded conductor and the equipment-grounding conductor on one side or the outlet box.
12. Electrical diagrams are for reference only. Light kits that are not packed with the fan must be U.L. Listed and marked suitable for use with the model fan you are installing. Switches must be UL general use switches. Refer to the instructions packaged with the light kits and switches for proper assembly.
13. WARNING: To reduce the risk of personal injury, do not bend the blade brackets (also referred to as :flanges") during assembly or after installation. Do not insert objects in the path of the blades.

NOTE: The important safeguards and instructions appearing in this manual are not meant to cover all possible conditions and situations that may occur. It must be understood that common sense, caution and carefulness are factors person (s) caring for and operating the unit.

MOUNTING OPTIONS

If there isn't an existing UL listed mounting box, then read the following instructions. Disconnect the power by removing fuses or turning off circuit breakers.

Secure the outlet box directly to the building structure. Use appropriate fasteners and building materials. The outlet box and its support must be able to fully support the moving weight of the fan (at least 50 lbs). Do not use plastic outlet box.

Figures 1,2 and 3 are examples of different ways to mount the outlet box in different situations. A longer downrod may be required in sloped ceiling situations to maintain proper blade clearance..

To hang your fan where there is an existing fixture but no ceiling joist, you may need an installation hanger bar as shown in Figure 4.

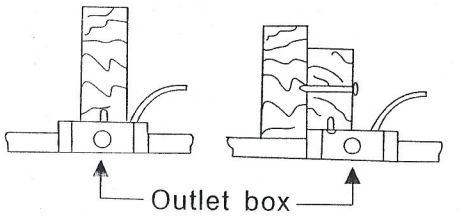

Figure 1

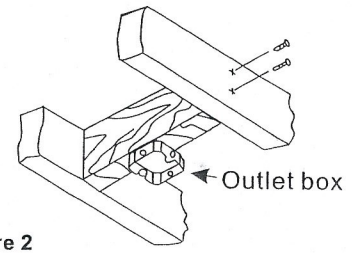

Figure 2

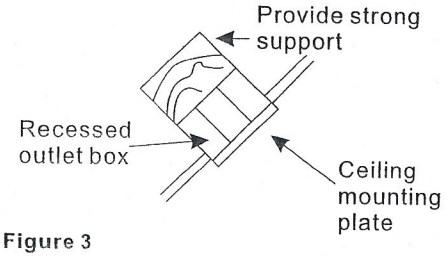

Figure 3

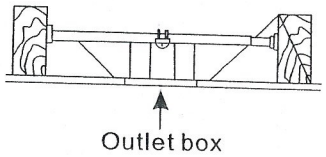

Figure 4

INSTALL MOUNTING BRACKET

1. To avoid possible electrical shock, be sure electricity is turned off at the main power panel before wiring.

   All wiring must be in accordance with National and Local Electrical Codes, and the ceiling fan must be grounded as a precaution against possible electrical shock.

2. Attach hanger bracket to outlet box using screws and spring washers provided with the outlet box (Fig. 5). Install square rubber washers between bracket and outlet box to reduce vibration of metal to metal surfaces.

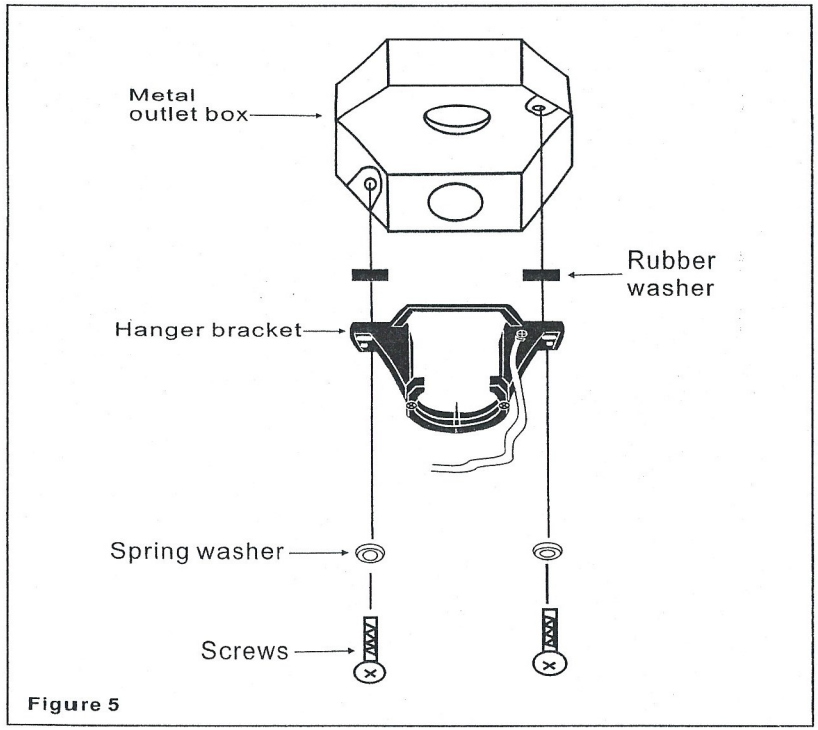

Figure 5

INSTALLING THE FAN

1. Slide the canopy on the downrod (Fig. 6). Thread the power leads from the fan through the canopy and downrod. Take extra care not to pull on power wires. Damage and loose connections could result from any abnormal pressure on these wires. Set downrod into downrod collar yoke. Route until the holes match. Being careful not to damage wiring, insert connector pin through the holes (See Fig. 6A, 6B). Secure the pin by inserting the stop pin through the connector pin.

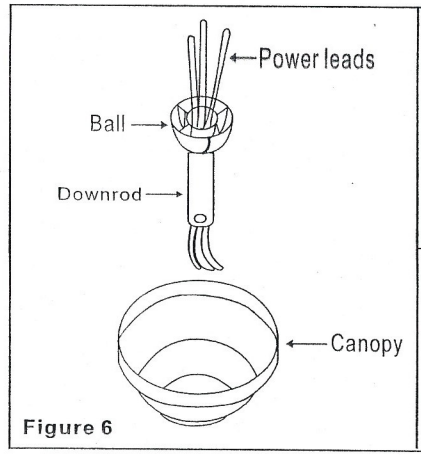

Figure 6

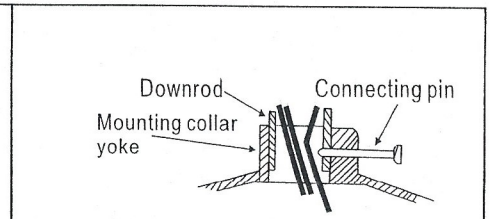

Figure 6A

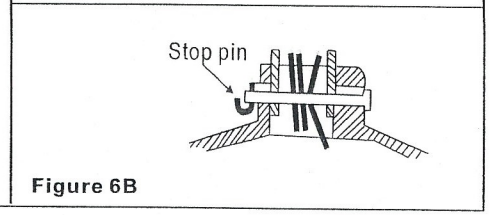

Figure 6B

WARNING: Do not force connector pin through downrod. Use of force could cause damage to wires inside. Make sure the stop pin is properly engaged to prevent it from falling out.

2. Tighten downrod setscrew. Some models have a locknut for the setscrew. To insure the setscrew fully seats against the downrod. It is necessary to back off the locknut until it contacts the setscrew head prior to tightening the setscrew. When setscrew is tighten againsst downrod, locknut should then be tightened against connector yoke. Some models have 2 downrod setscrews. Repeat for both (Fig. 7)

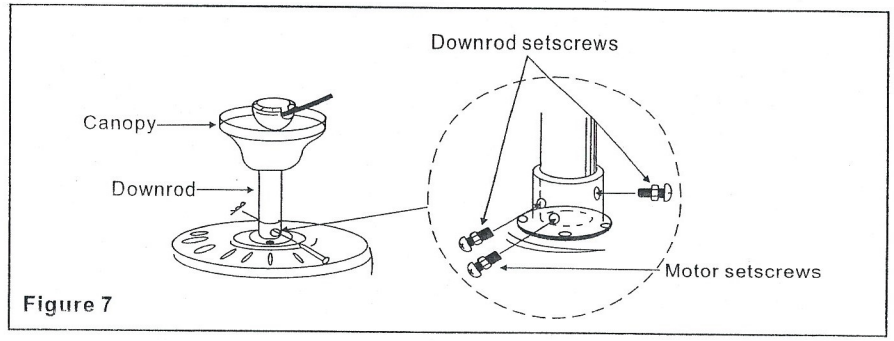

Figure 7

Tighten motor setscrew. Check the strength of this connection (pre-tightened at factory) by holding the motor housing in position and turning the downrod counter clockwise. If this connection slips, re-tighten motor setscrew and locknut. Follow the same procedure as mentioned above for downrod setscrew. Install ball into hanger bracket opening. The hook opposite of the hanger bracket opening should fit in slot on ball (Fig. 8)

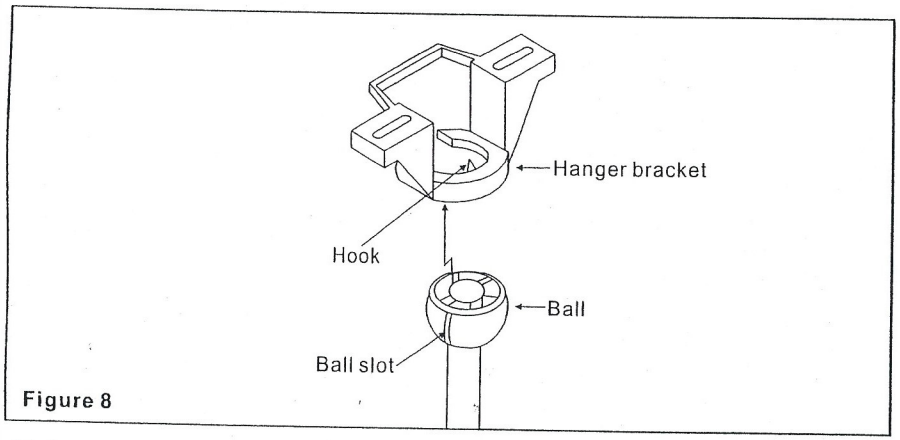

Figure 8

Make wire connections.(Refer to section titled "Electrical Connections")

ARNING: To avoid damaging the blade arms and blades, do not install either until is fastened to ceiling. To avoid motor shift, handle fan by downrod or switch using only.

FINISHING THE INSTALLATION

p 1. Slide the canopy up to the ceiling and over the 2 screws on the hanger cket. Rotate canopy to lock in place.

TE: Adjust the canopy screws as necessary until the canopy snug. (Fig. 9)

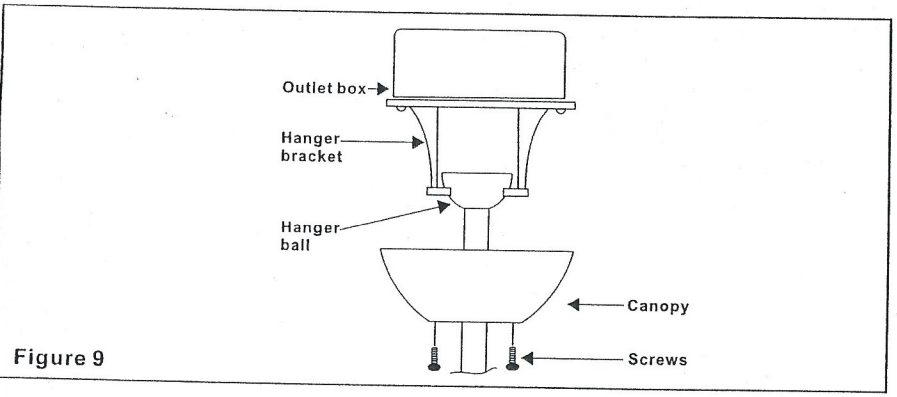

Figure 9

ELECTRICAL CONNECTIONS

Make electrical connections. Connect black to black, white to white, and green grounding lead to grounding conductor of supply circuit. Make sure that fan is properly grounded. Carefully push all wiring inside wiring box after splices are made.

The blue wire is for your optional light kit.

Fan controlled by pull chain switch.
Light controlled by slide switch.

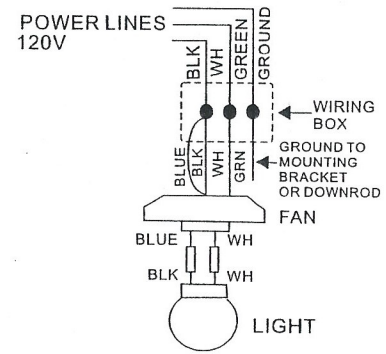

Figure 10A

Fan controlled pull chain switch.
Light controlled from wall switch.

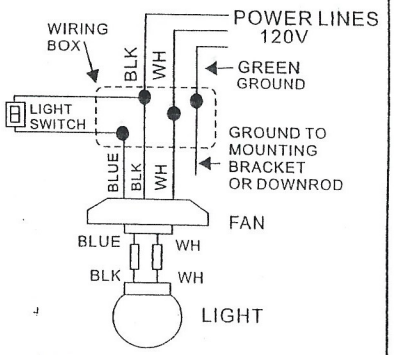

Figure 10B

Fan and light controlled by independent wall switches.

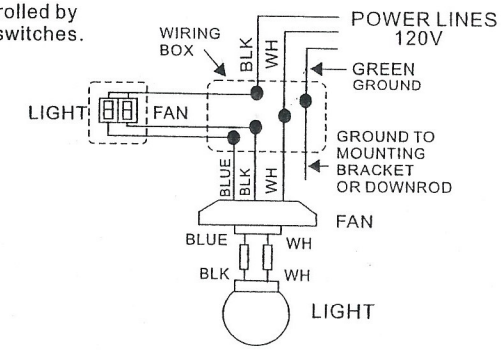

Figure 10C

ATTACHING THE FAN BLADES

Step 1 Attach the blade to the blade bracket using the screws and fiber washers as shown in Figure 11. Start screw into bracket. Repeat for the two remaining screws.

Step 2 Tighten each screw securely starting with the center screw. Make sure the blade is straight.

Step 3 Fasten blade assembly to motor using the screws supplied. (Fig. 12)

Step 4 Install optional light kit if you wish. Follow the instructions included with the light kit.

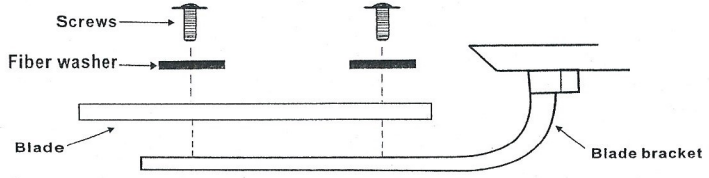

Figure 11

INSTALLING 4 OR 5 BLADES: If your fan has 4 or 5 blades adaptable motor, refer to the following step for installation.

Attach four (or five) blade assemblies to motor using the eight (or ten) screws. Make sure all screws are tightened securely.

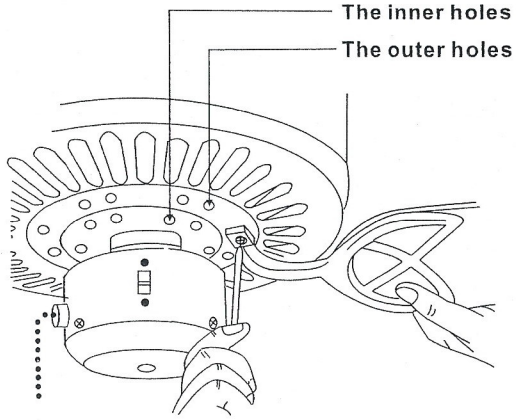

Figure 12

LIGHT KIT INSTALLATION (Optional)

Be sure all power to the fan is off before beginning to install the light kit by turning off circuit breaker or removing fuse at fuse box. Turning power off at switch is not sufficient to prevent electrical shock.

For Type A: Center Nipple Attachment (as shown in Fig. 13)

1. Remove the switch box housing cover from the motor assembly by unscrewing the three screws.
2. Remove the threaded plug from the center of this cover by pushing out. You may discard this plug or keep it for future use.
3. Attach the cover to the fixture by feeding the kit wires (black and white) through the hole of the cover and screw it onto the fixture threaded post. Thread the post washer and nut (provided with the light kit hardware bag). Onto the post until snug against the inside of the switch cover plate. Be sure it is tight enough to prevent the light kit from vibrating loose.
4. Locate two single wires in switch housing. White and blue labeled "for light"
5. Connect them to the light kit wires
   - White to white
   -Blue to black

   Note: If the wire connector from the fan switch box does not marry with the wire connector of the light kit, cut off the connectors and join the wires with wire nuts.
6. Carefully push all wires back into switch housing of fan, then replace the cover with original screws.
7. Install 60 watt (max.) Bulb (not provided) and glass shades. Tighten fitter screws provided with the light kit. Do not over tighten.
8. Restore the power and your light kit is ready for operation.
9. If light kit does not work, you need to lower either canopy or decorative housing on your ceiling fan to make sure the blue wire is connected to black household wire. Please refer to electrical connection section.

For type B: Light kit center mounting cover attachment (as shown following Fig.14) (light kit without center mounting box)

1. Locate the two single wires in the switch box housing; white and blue labeled "for light".
2. Make wire connections: white to white, blue to black.

   NOTE: If the light kit wire from the fan switch box does not marry with the wire connector of the light kit, cut off the connectors and join the wires with wire nuts.
3. Carefully push all wires into switch housing.
4. Install 60 watt (max.) Bulb (not provided) and glass shades. Tighten shade fitter screws until it is against the glass. Do not over tighten.
5. Restore power and your light kit is ready for operation.
6. If light kit does not work, lower the decorative housing/canopy and check wiring connections. Ensure the blue wire is attached to the black wire. (Remember turn off power at first.)

For type C: Light fixture is already pre-installed onto the switch housing (As shown in Figure 15)

1. Install a 60 watt (max.) Bulb (not provided) and glass shade. Gently tighten the 3 thumb screws: do not over tighten.
2. Restore power and your light kit is ready for operation.
3. If the light kit does not work, turn off the electricity and lower either the canopy or the decorative housing on your ceiling fan to make sure the bulb wire is connected to the black household wire.

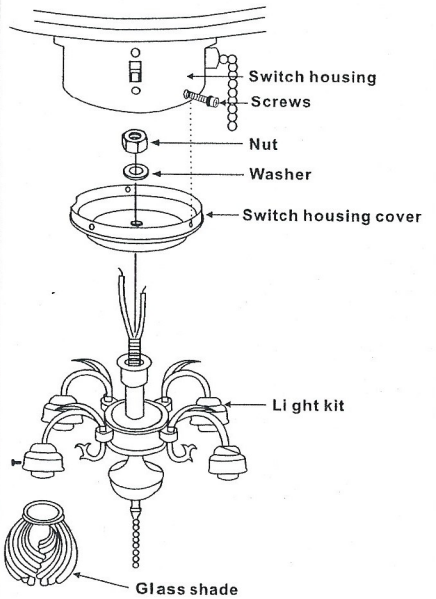

Figure 13

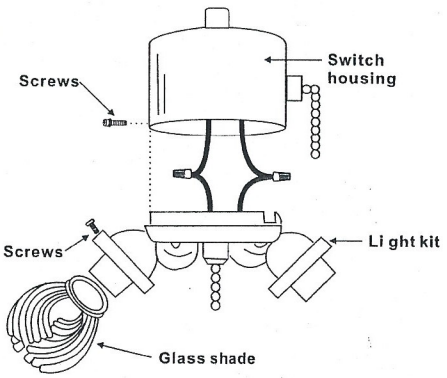

Figure 14

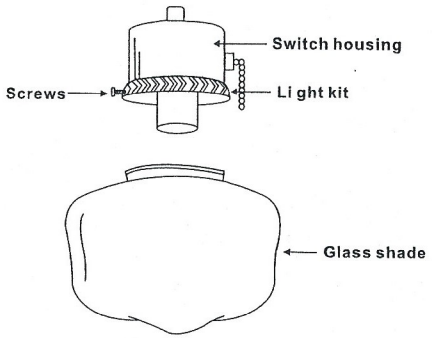

Figure 15

NOTE: Wait for fan to stop before changing the setting of the slide switch.
Turn on the power and check operation of fan. The pull chain controls the fan speed as follows: 1 pulls-High, 2 pulls-Medium, 3 pulls-Low, and 4 pulls-Off.
Speed settings for warm or cool weather depend on factors such as the room size ceiling height, number of fans, and so on.
The slide switch controls directions: forward (switch down) or reverse (switch up).

Warm weather- (Forward) A downward flow creates a cooling effect as shown in Figure 17. This allows you to set your air conditioner on a higher setting without affecting your comfort.

Cool weather- (Reverse) An upward airflow moves warm air off the ceiling area as shown in Figure 16. This allows you to set your heating unit on a lower setting without affecting your comfort.

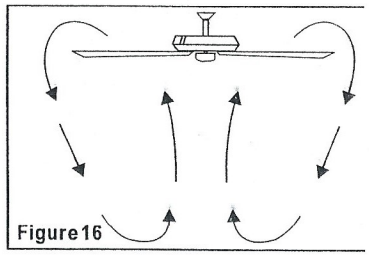

Figure16

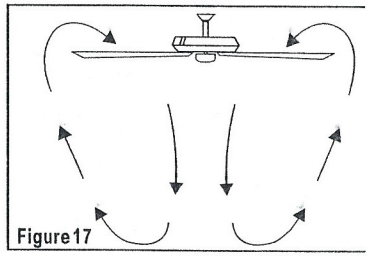

Figure17

TROUBLESHOOTING

PROBLEM	SOLUTION
Fan will not start	1. Check circuit fuses or breakers. 2. Check line wire connections to the fan and switch wire connections in the switch housing. CAUTION: Make sure main power is off.
Fan sounds noisy	1. Make sure all motor housing screws are snug. 2. Make sure the screws that attach the fan blade bracket to the motor hub are tight. 3. Make sure wire nut connections are not rubbing against each other or the interior wall of the switch housing CAUTION: Make sure main power if off. 4. Allow a 24-hour "breaking-in" period. Most noises associated with a new fan disappear during this time. 5. If using an optional light kit, make sure the screws securing the glassware are tight. Check that light bulb is also secure. 6. Some fan motors are sensitive to signals from solid-state variable speed controls. If you have installed this type of control, choose and install another type of control 7. Make sure the upper canopy is a short distance from the ceiling. It should not touch the ceiling.