LAVISH HOME
COLLECTION

ASSEMBLY INSTRUCTION

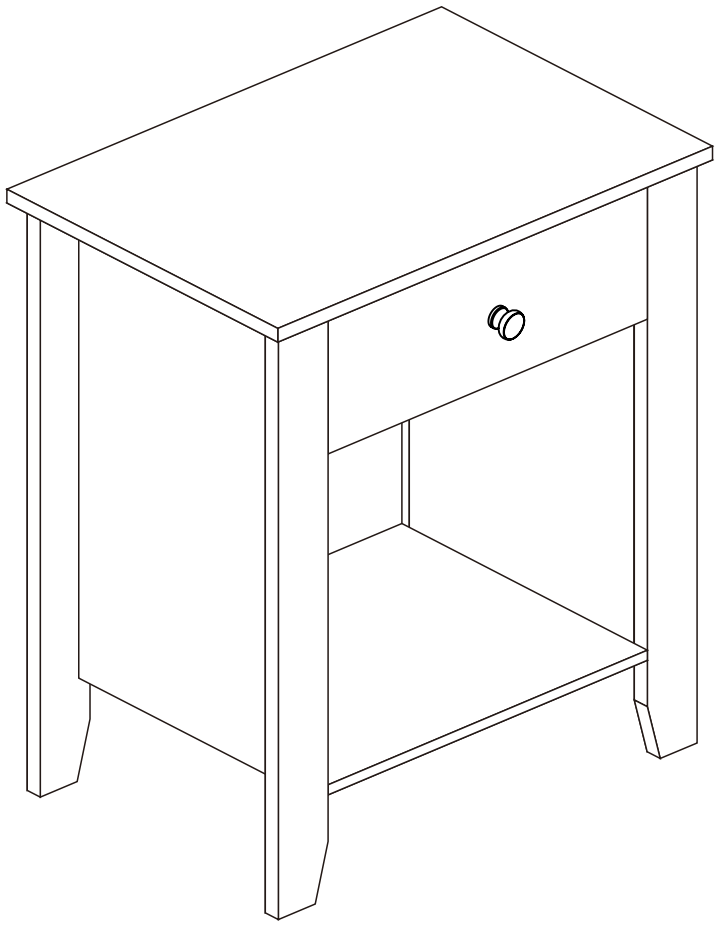

NOTE: THIS INSTRUCTION BOOKLET CONTAINS IMPORTANT SAFETY INFORMATION
PLEASE READ AND KEEP FOR FUTURE REFERENCE

Table of contents.....2

General Information.....3

Use and Storage of the Handbook.....3

Intended use.....3

Safety.....3

Set up and assembly 3

Parts list.....4

Hardware..... 5

Assembly instructions..... 6-11

Cleaning, care and Maintenance.....12

General Information

Use and Storage of the Handbook

Thank you for purchasing our Lavish Home Collection product, we have designed our furniture with you, the customer in mind. Our clear and easy step by step instructions will guide you through the project from start to finish.

This user manual contains important and useful information to accompany your purchase. Failure to follow the instructions outlined may result in personal injury or damage to the product.

Please ensure you keep the instruction manual in a safe place, so you can refer to the instructions at any time in the future.

If you have any problems or questions, please email our customer service department at www.LavishHomeStyles.com

Intended Use

This product is intended for indoor, household use only and has not been designed for commercial use.

Any improper use of the product could result in personal injury or damage to the product which the manufacturer or vendor cannot be held responsible.

Safety

Assembly is to be carried out by an adult only.During product assembly children should always be kept away due to possible risk of injury.

Keep packaging materials away from children and dispose of responsibly and immediately.

Do not use this item or attempt to assemble if any components are missing or damaged.

Please use caution and care when lifting the product to avoid personal injury and/or damage.

Please ensure that you have enough space and people to assemble your product safely.

Do not stand on the product or use as a stepladder.

Refer to the product’s maximum weight capacity.

Set up and Assembly

Please check that all parts are present before you start the assembly.

For ease and speed of assembly, we recommend that before you start each step of the assembly that you identify all parts required for that step.

We recommend that where possible, all items are assembled near the area which they will be placed in use to avoid moving the product unnecessarily once assembled.

For the protection of your furniture, we recommend that the product beassembled on a protected surface to prevent any damage.

During assembly please take care not to over-tighten any fittings, as this may damage the product.

Always place the product on a flat and stable surface.

PART LIST

A Table top 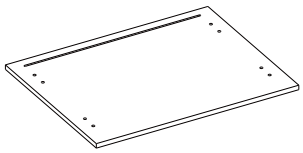 1PC	B Left side panel 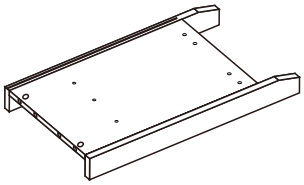 1PC	C Right side panel 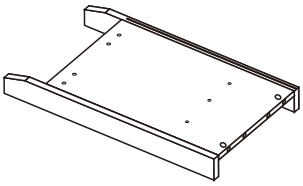 1PC	D Bottom board 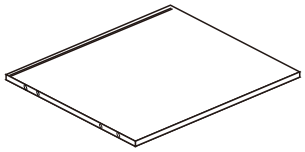 1PC
E Back panel 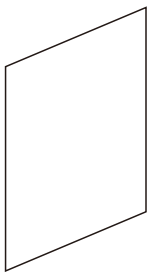 1PC	F Drawer front 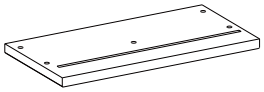 1PC	G Drawer back 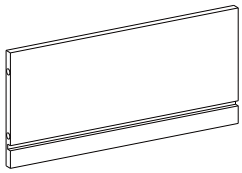 1PC	H Left drawer side  1PC
I Right drawer side 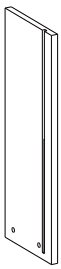 1PC	J Drawer bottom 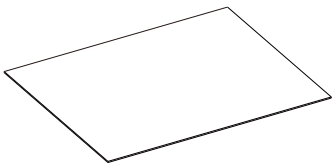 1PC		

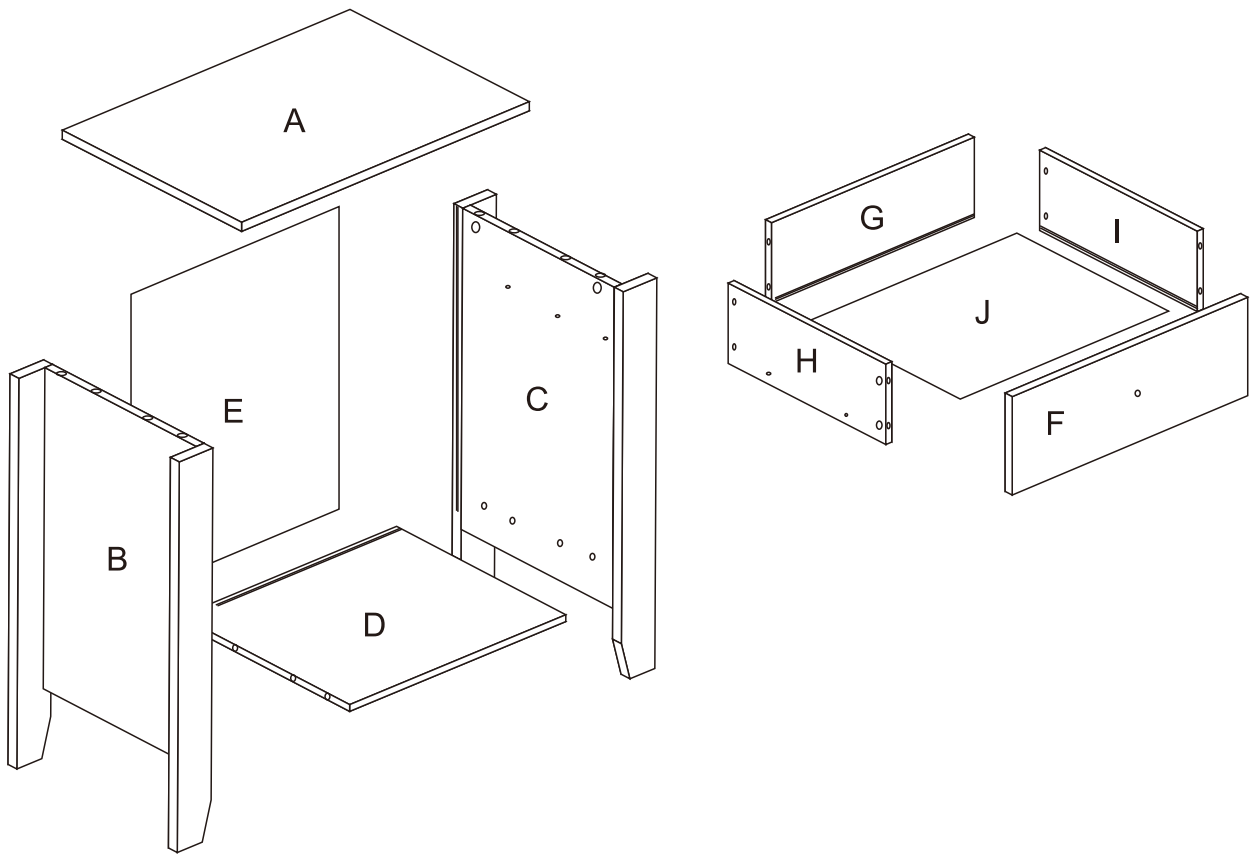

HARDWARE

① cam bolt	② cam lock	③ wooden dowel	④ long self-tapping screw	⑤ knob set
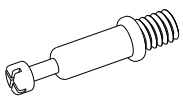 12PCS	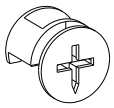 12PCS	 8PCS	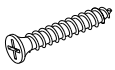 4PCS	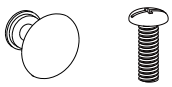 1PC
⑥ short self-tapping screw	⑦ drawer slides	drawer slides	drawer slides	drawer slides
 10PCS	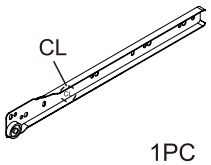 1PC	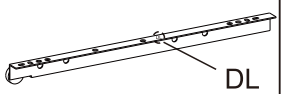 1PC	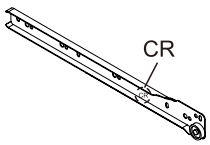 1PC	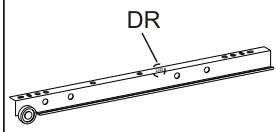 1PC

Phillips-Head screwdriver is not included.



Assembling the unit with cams		
Caution Risk of damage or injury.HIDDEN CAMS must be completely tightened.HIDDEN CAMS that are not completely tightened may loosen,and parts may separate.	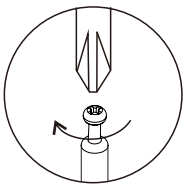	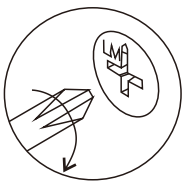
	Gently screw cam bolt into the threaded anchor.	Inser cam lock with arrow pointing down.Screw the cam firmly into locked position.



Assembly Instructions

Attention, In order to help with your assembly, do not tighten screws until you have assembled all other parts

STEP 1

⑥x6	drawer slides	drawer slides	1. Attach the drawer slide to the left side panel using #6 2. Repeat step 1 for right side
	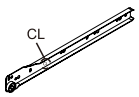	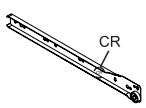	

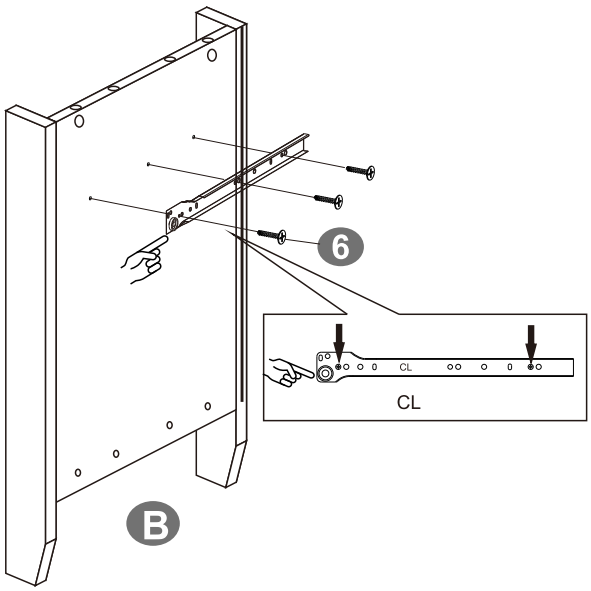

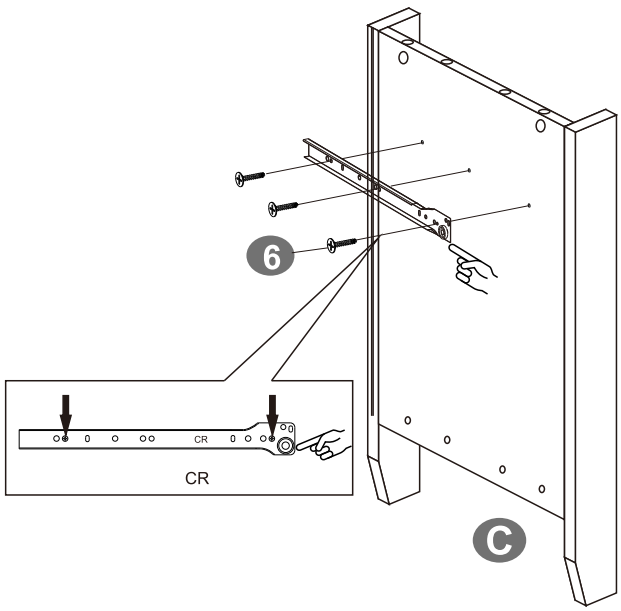

STEP 2

①x4	③x4	1.Attach wooden dowel #3 to the both side board 2.Attach cam bolt #1 to the both side board
		

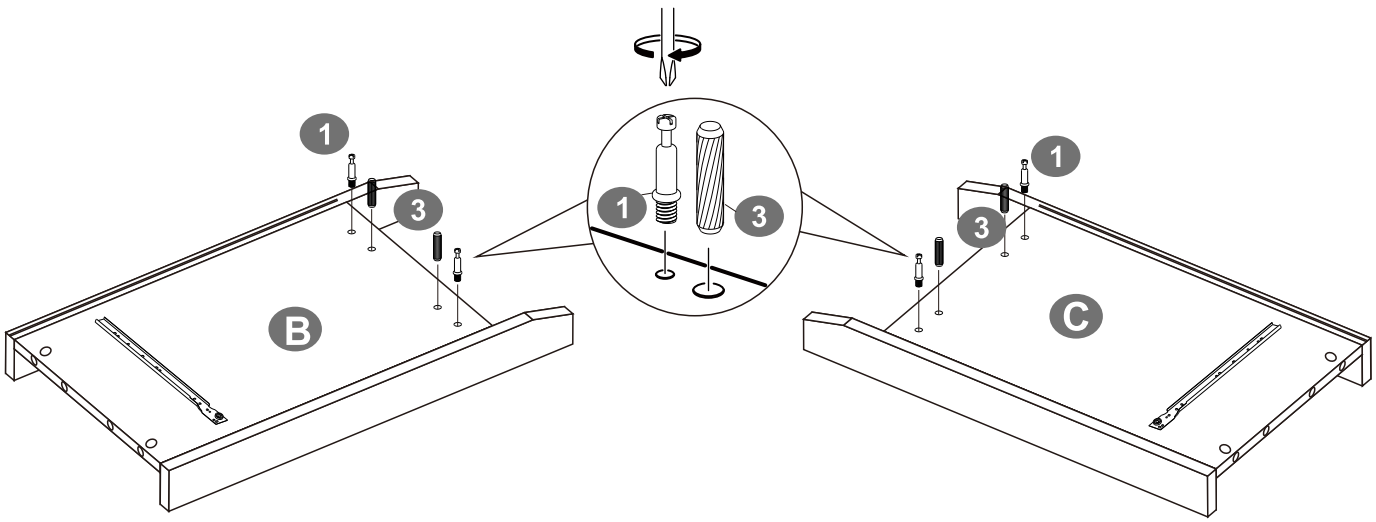

STEP 3

②x2 	1.Insert #2 cam locks into bottom board to align with #1 cam bolts 2.Roate clockwise to secure cam bolts in place 3. Connect bottom to left side panel

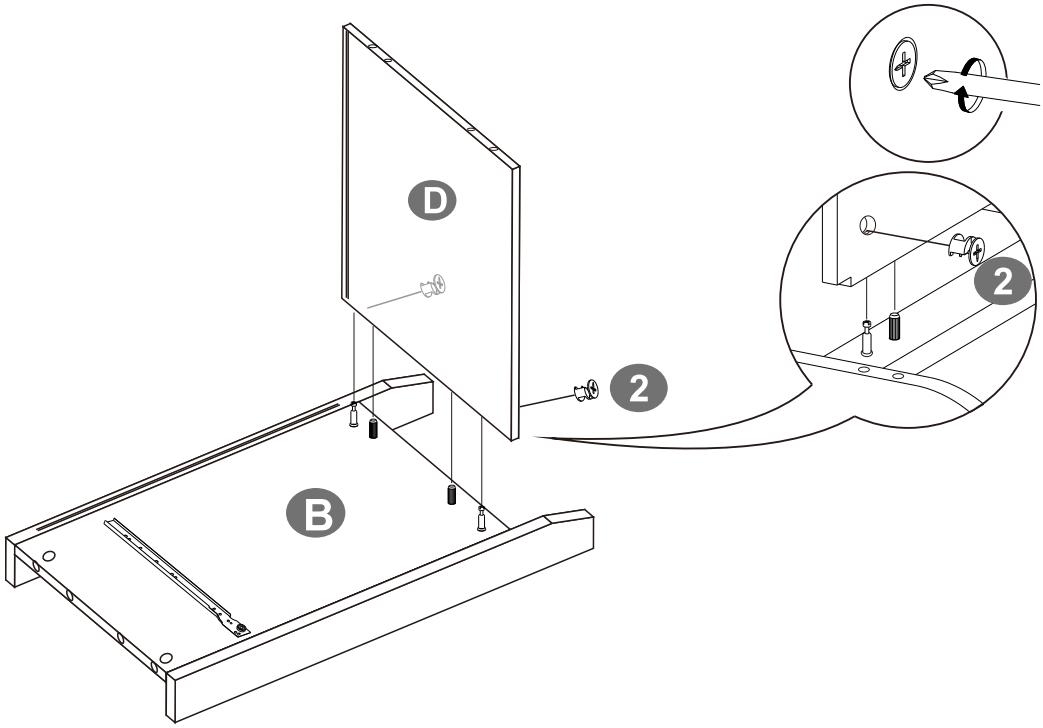

STEP 4

②x2 	Repeat step 3 connecting left panel/bottom unit to right side panel

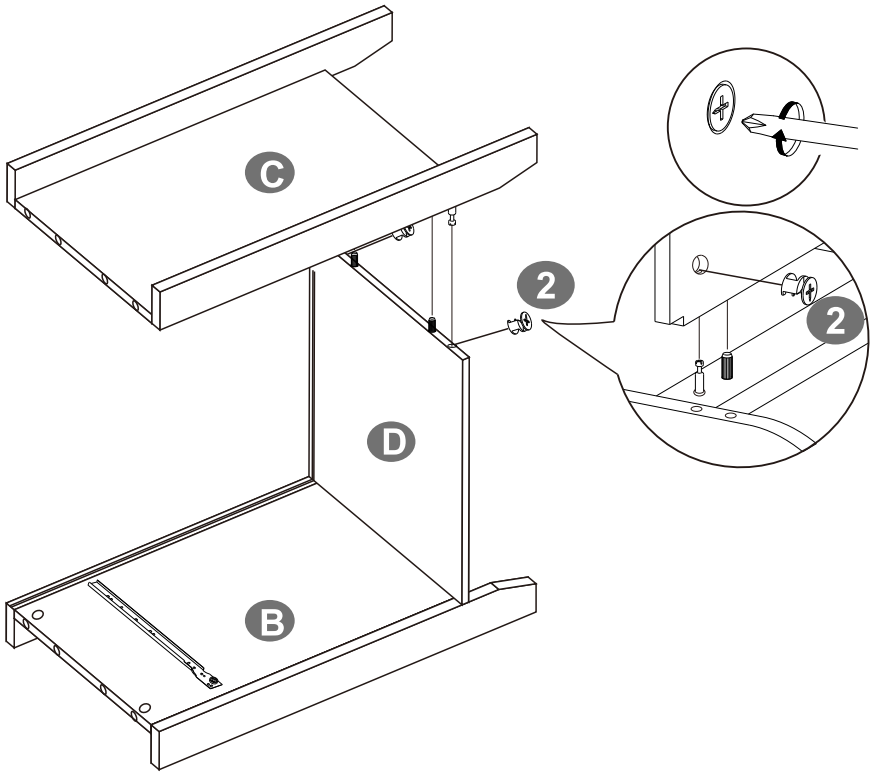

STEP 5

Insert back panel into groves on the side panels

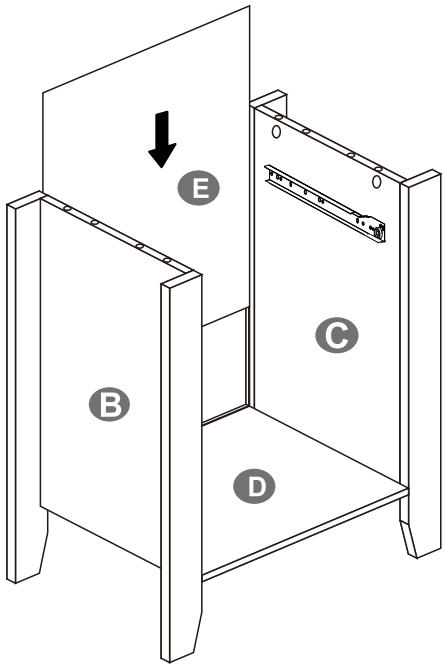

STEP 6

①x4	②x4	③x4	1.Insert the #3 wooden dowel to the top of both side panels 2.Inserting #1 cam bolts into table top 3. Attach the top board by inserting #1 cam bolts into holes on sides 4.Insert #2 cam locks into cam lock holes on both side panels and rotate clockwise to ensure cam bolts in place
			

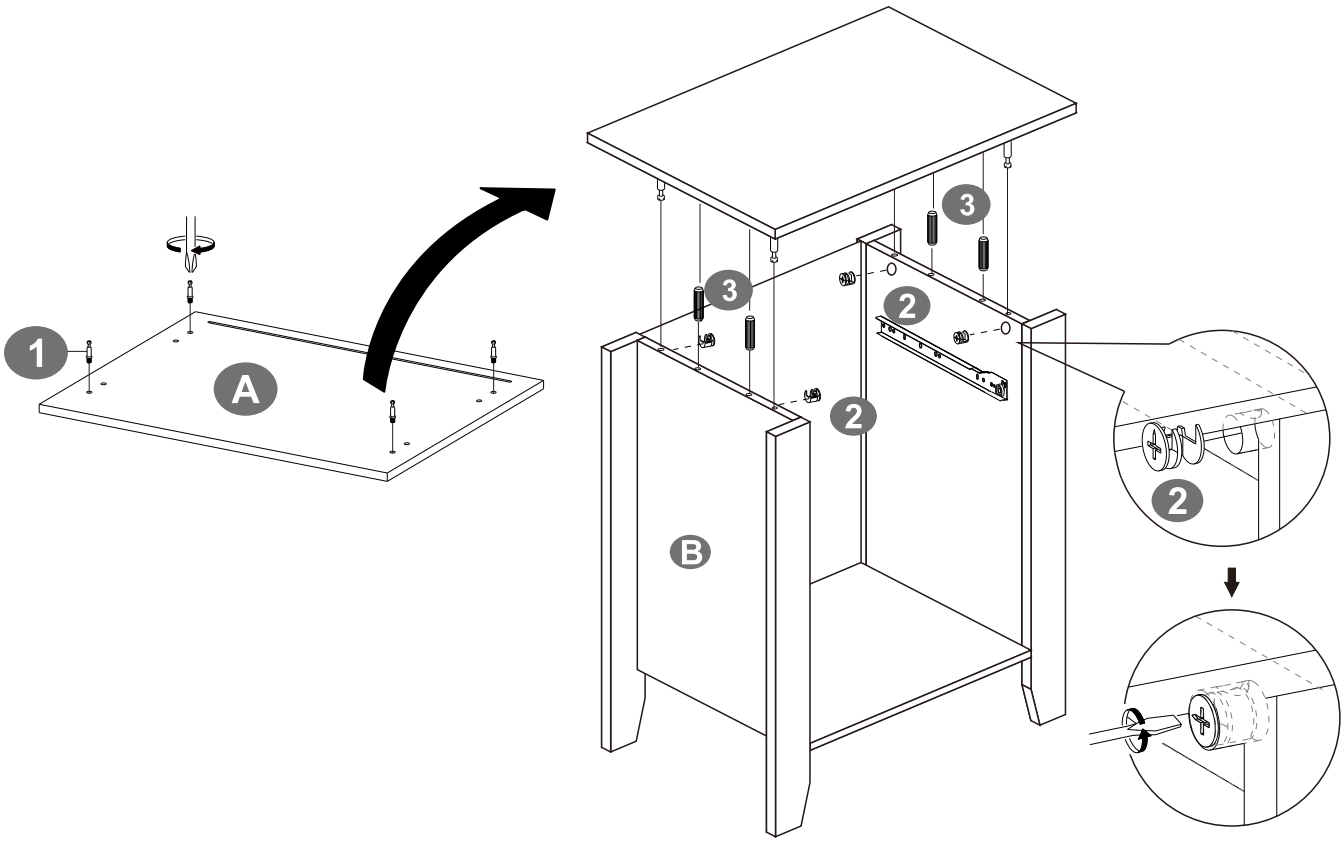

STEP 7

①x4	②x4	1.Attach the left drawer side to the front of drawer front using #1 and #2 2. Repeat step 1 for right side 3.Insert the bottom panel into grooves on the bottom of the drawer

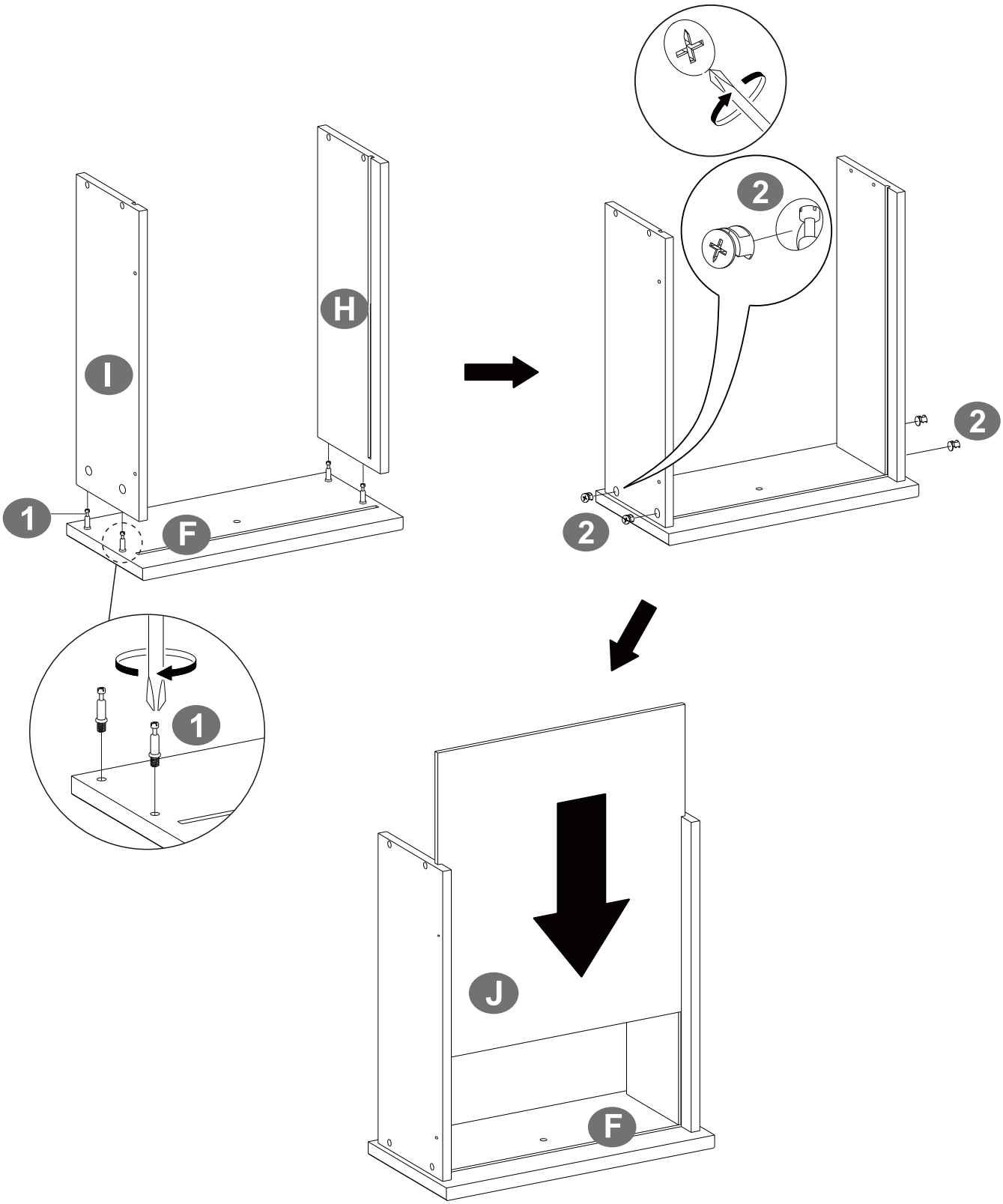

STEP 8

④ x4	⑤ x1	⑥ x4	drawer slides	drawer slides
			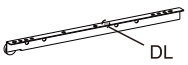	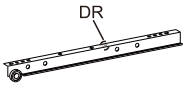

1.Attach the drawer back to drawer front/sides (from step 7) using #4
2.Attach the knob to the drawer using #5
3.Attach the drawer slide on the bottom of the drawer using #6

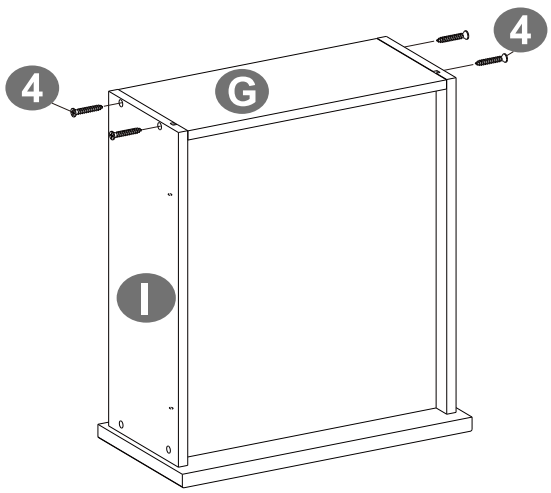

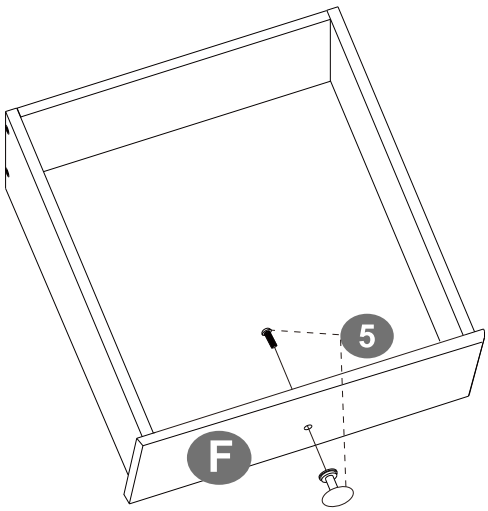

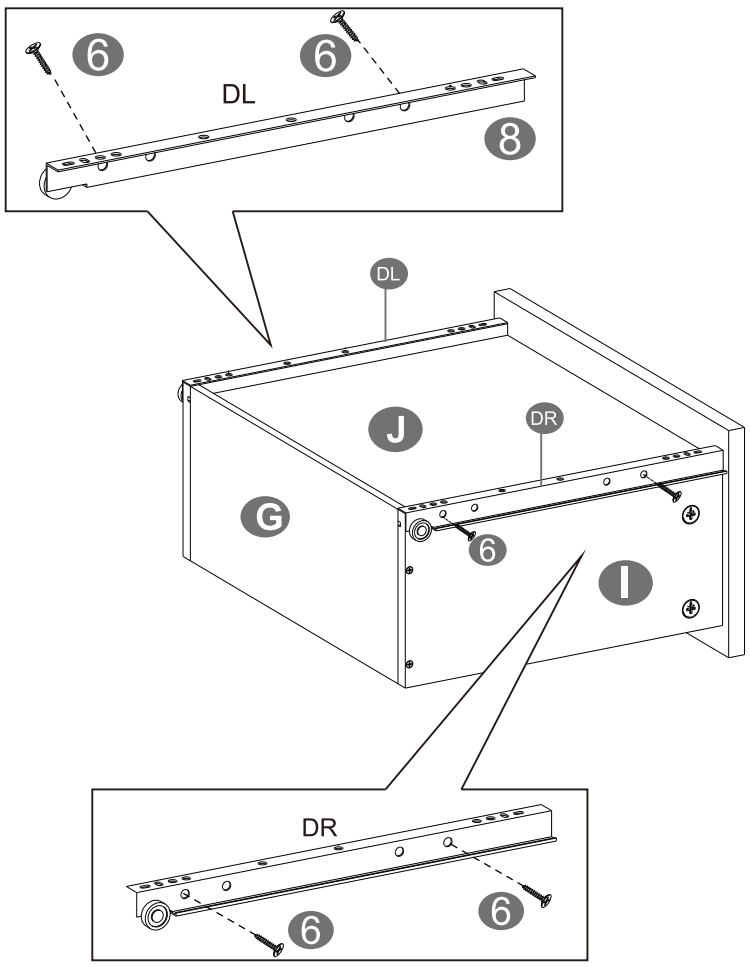

STEP 9

To insert the drawer into your unit, tip the front of the drawer down and drop the glides on the drawer behind the glides on the unit. Lift the front of the drawer up and slide it into the unit.

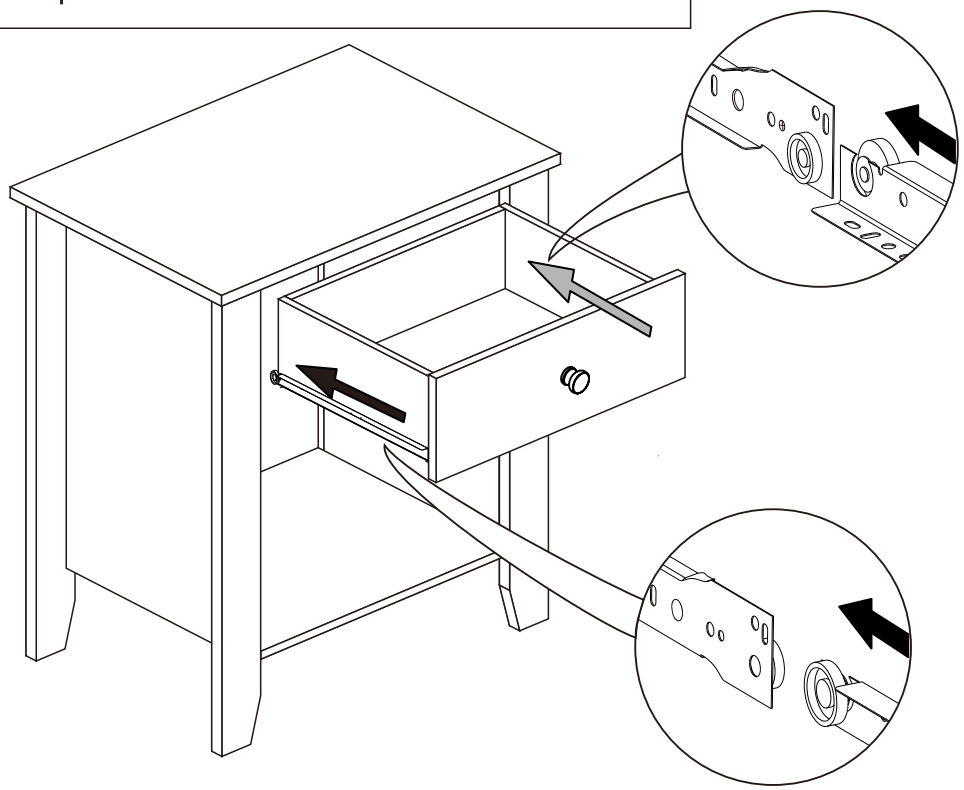

STEP 10

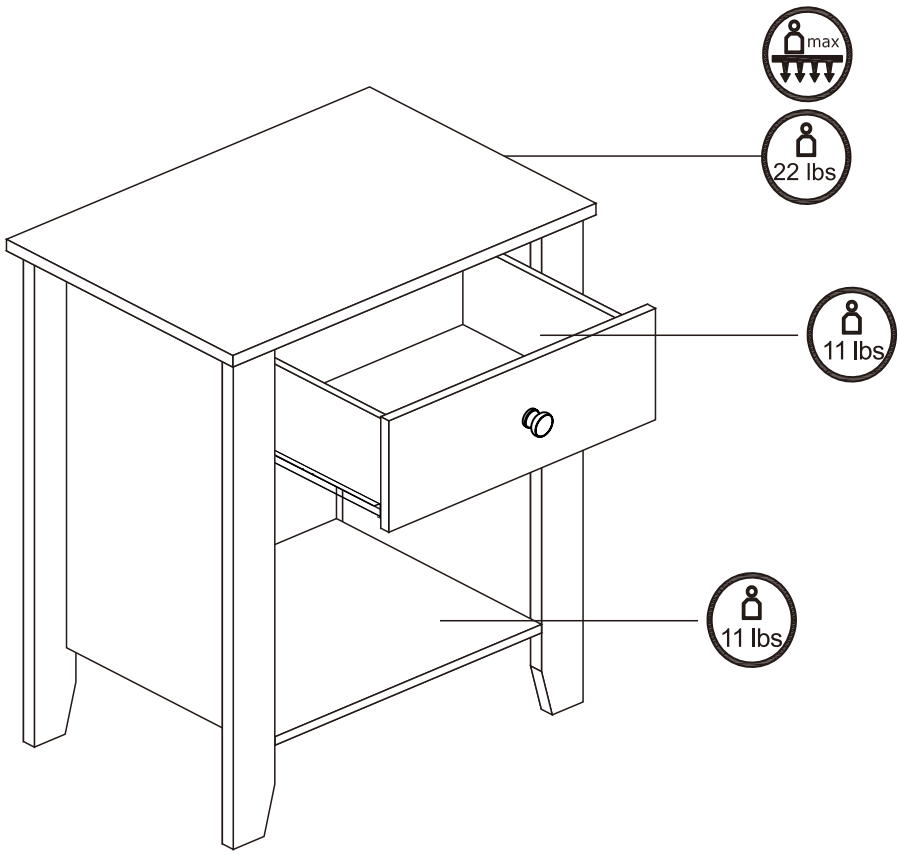

CLEANING, CARE AND MAINTENANCE

Regularly check all fastenings to ensure that they are properly tightened.

Clean with a wet soft cloth, then use a soft lint free cloth to dry.

Hot items should not be placed directly on the furniture surface.

Do not clean furniture with harsh cleaners or polish.

Do not place furniture in direct sunlight or near heating/cooling vents.

To protect the surface, use a pad when writing on top of the furniture.

For indoor residential use, do not place furniture outside.

Children should not climb on furniture.