

NKSS-SBFARM Stainless Steel Farmhouse Kitchen Sink

Requested By:

_____

Specific Features:

_____

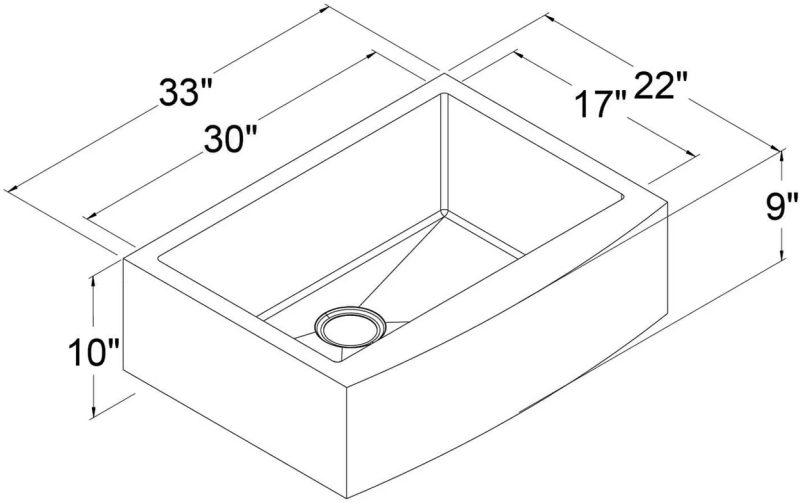



STANDARD SPECIFICATIONS:

- Single large kitchen sink w/ curved apron
- Stainless Steel 304 18/8 chromium-nickel
- Farmhouse installation
- 18-gauge thickness
- Sound deadening insulation
- 3.5” drain opening
- Inside 30” x 17” x 9”
- Standard U.S. plumbing connection

WARRANTY:

Limited lifetime warranty

- See www.Novatto.com for details

COORDINATING ACCESSORIES:

- NKSD-024BN/CH/MB Extra Long Strainer Basket Drain
- 28 x 14.5-inch Stainless Steel Kitchen Sink Grate w/ Cushioned Legs

NOTES

Novatto reserves the right (1) to make changes in specifications and materials, and (2) to change or discontinue models, both without notice or obligation. Dimensions are for reference only, see www.Novatto.com for finish options and product availability.

Novatto Inc
TOLL FREE 844.404.4242
www.Novatto.com