TOOLkiss®

SKU:FP30MB
FP32MB
FP34MB
FP36MB
FP30CH
FP32CH
FP34CH
FP36CH

SHOWER DOOR

INSTALLATION GUIDE

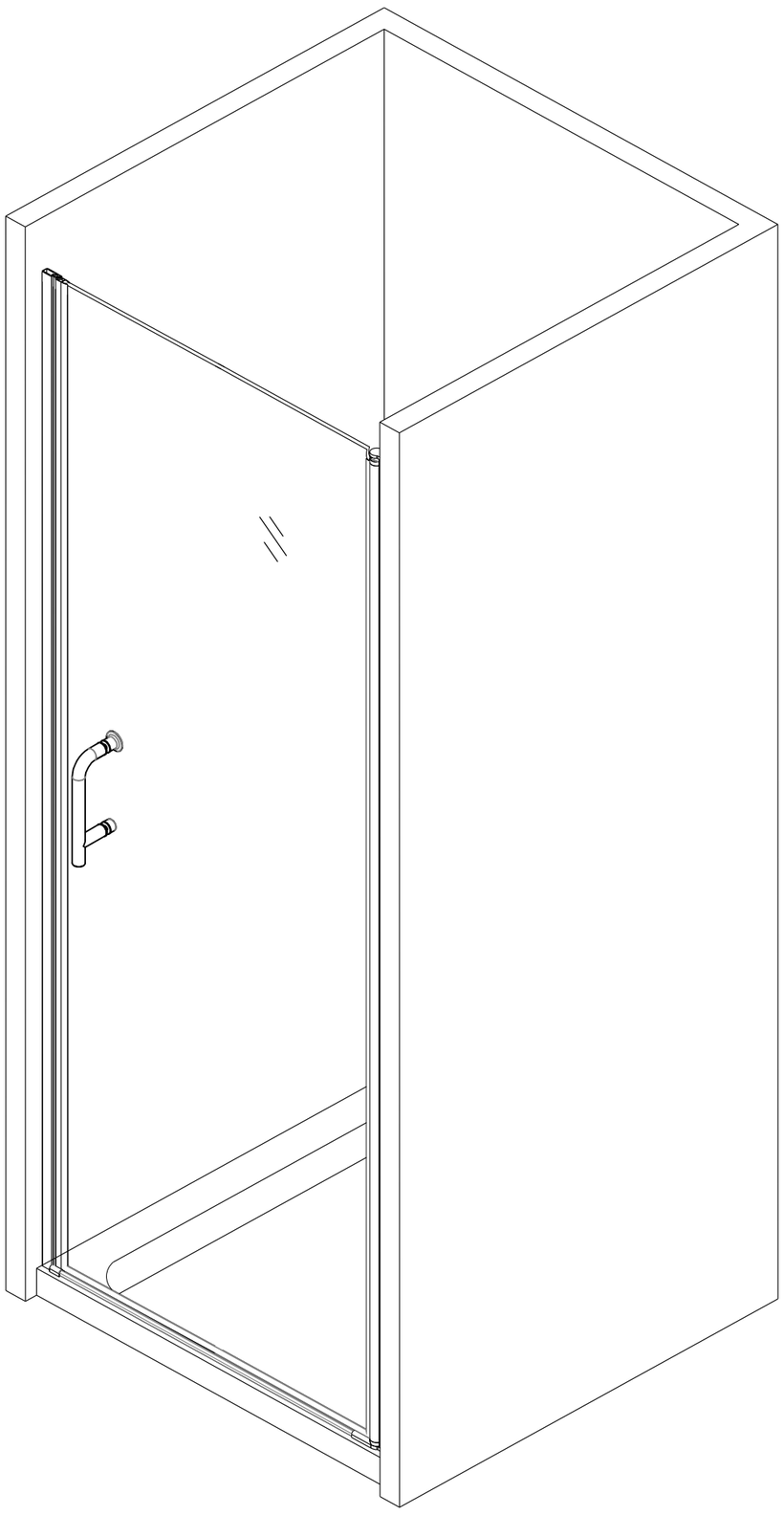

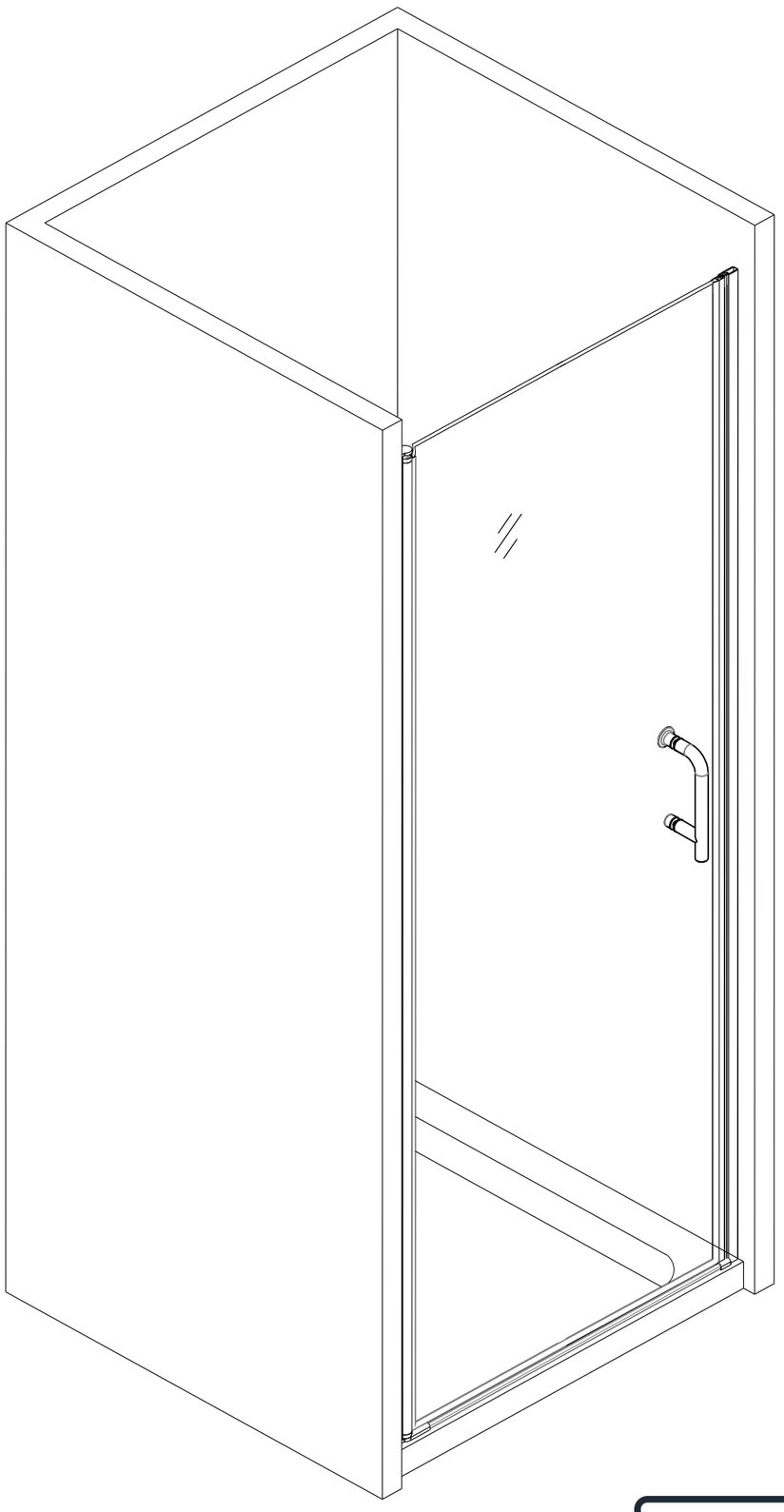

Reversible For a Left or Right Door

BFH installation video

This show door excluding shower base.

Customer service:

For more information about TOOLKISS® products please visit WWW.TOOLKISS.COM

+1(832)3768443

sales@toolkiss.com

Do not return product to the store.Contact TOOLKISS® directly with any questions.

25/03/19 Rev.1.0

Model Specific Preparation

REQUIRED:

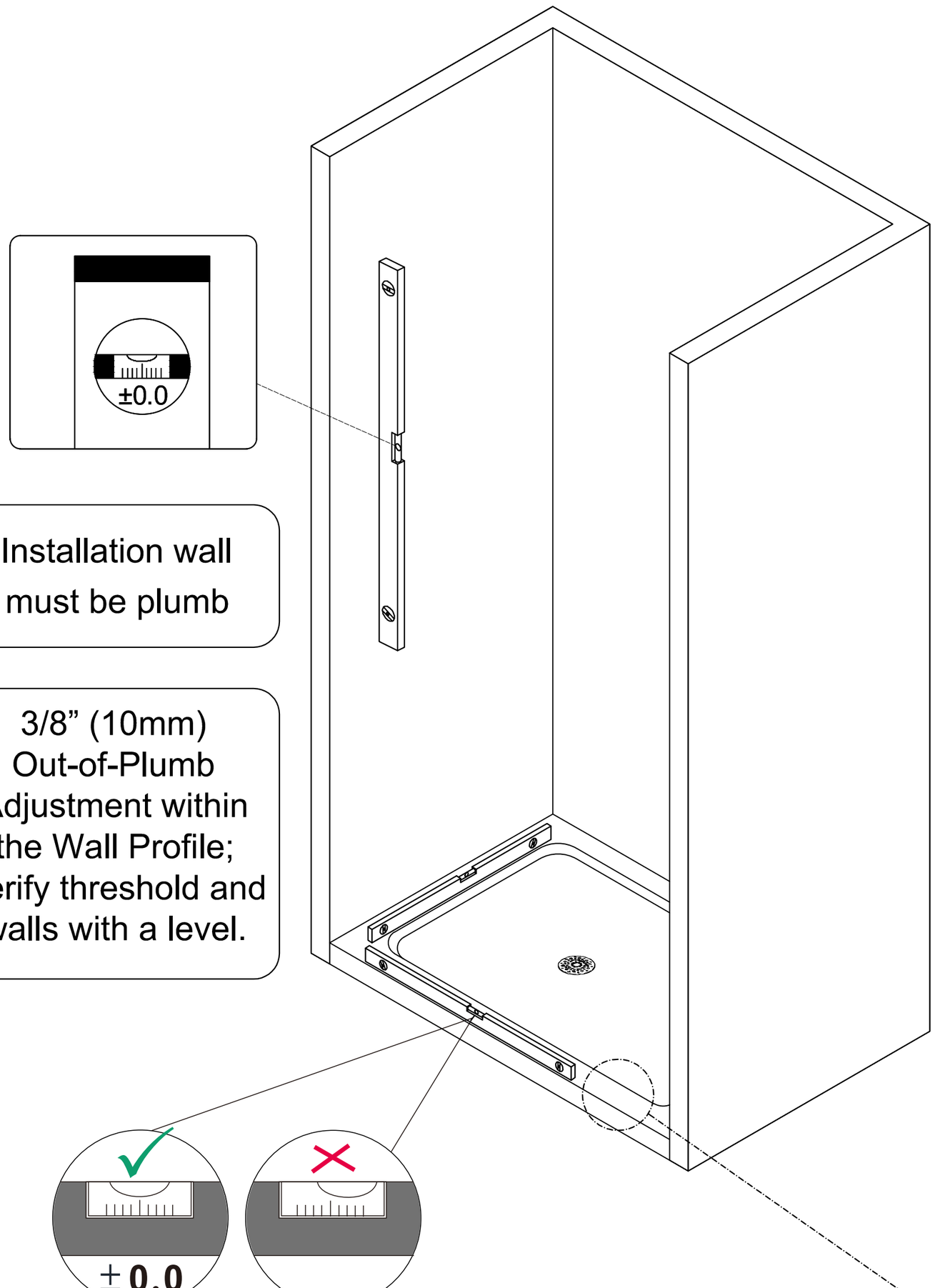

Installation wall must be plumb

3/8” (10mm) Out-of-Plumb Adjustment within the Wall Profile; Verify threshold and walls with a level.

Threshold must be level

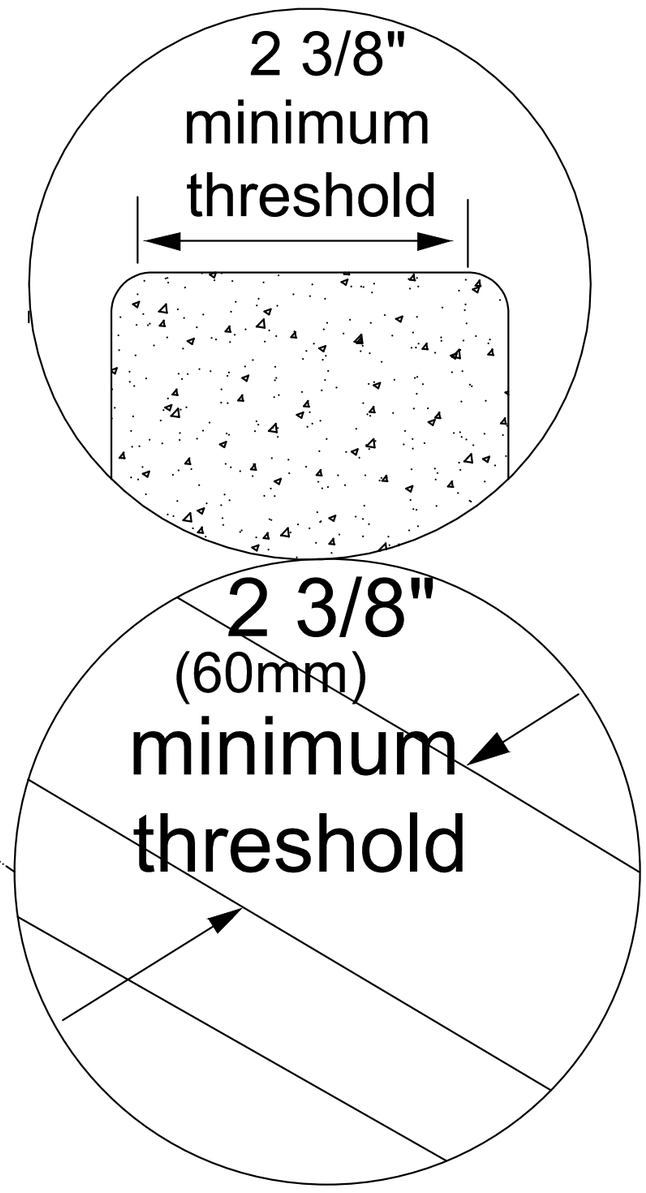

Model Specific Preparation

REQUIRED:

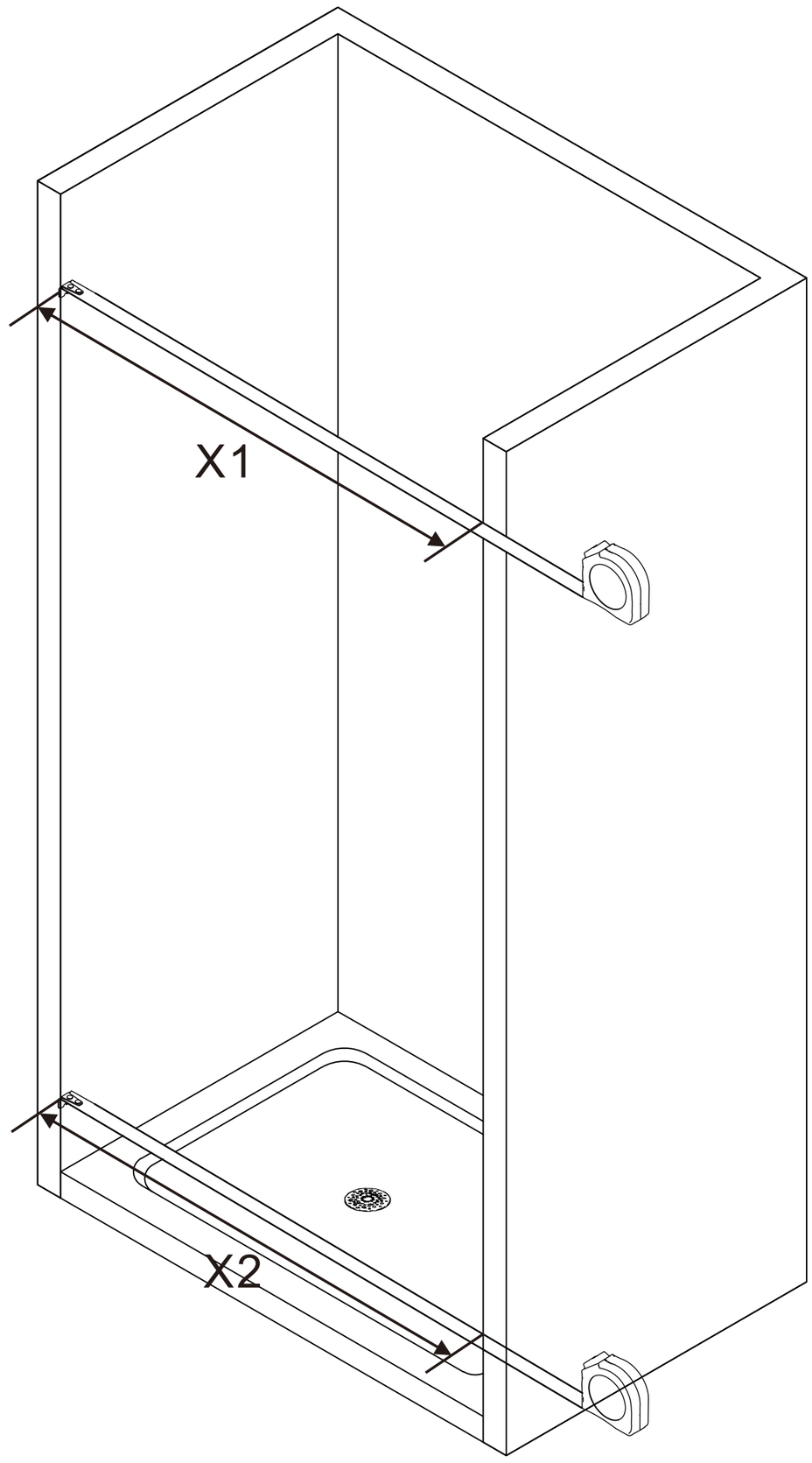

If the width of the upper and lower walls is inconsistent, please trim the wall

X1=X2

PACKAGE CONTENT

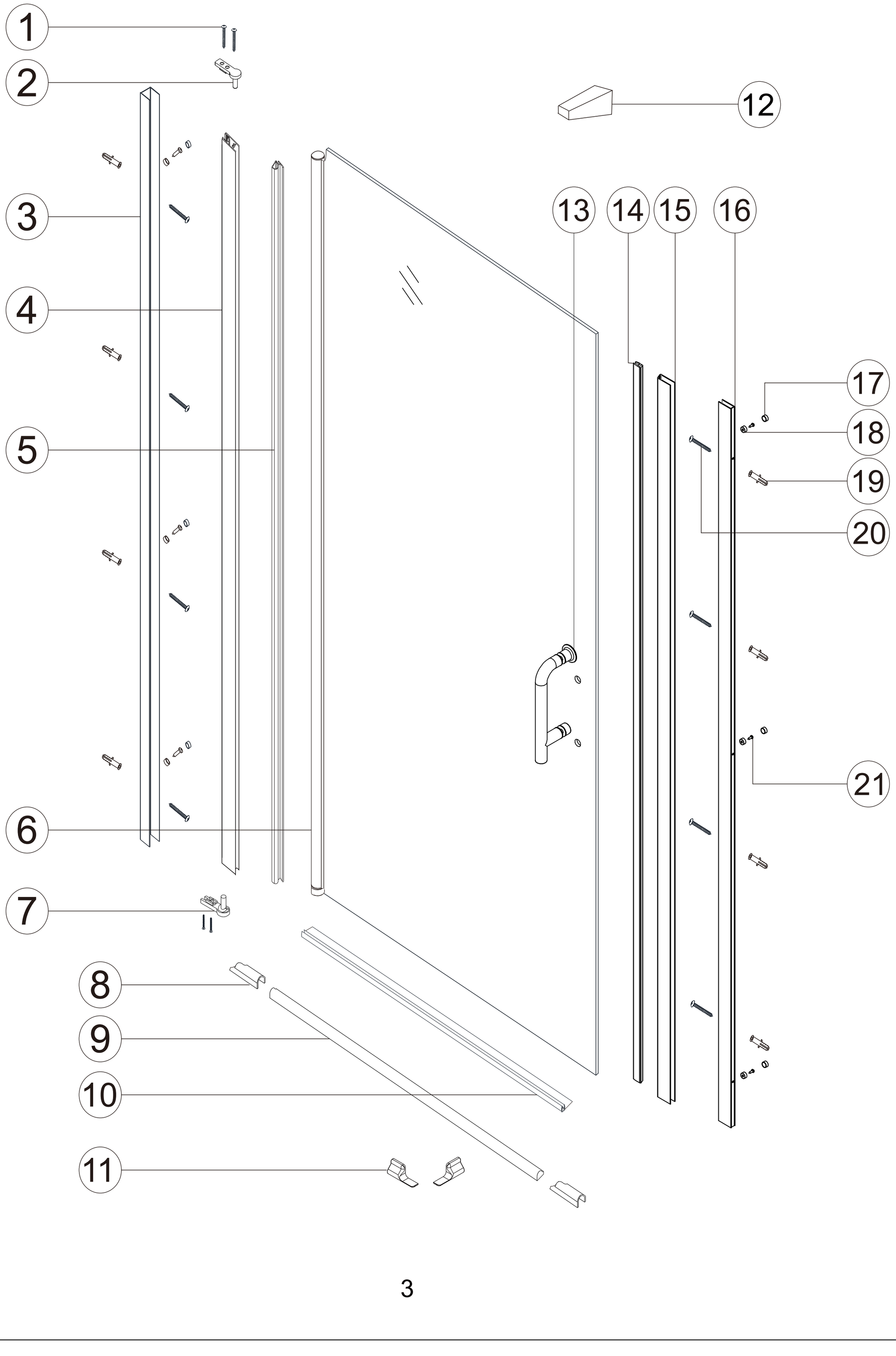

PACKAGE CONTENT

2	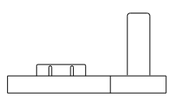 x1	3	 x1	4	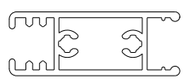 x1	5	 x1
6	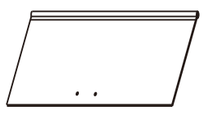 x1	7	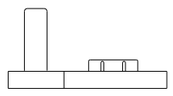 x1	8	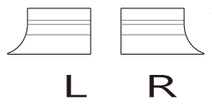 L R x2	9	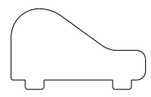 x1
10	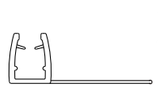 x1	11	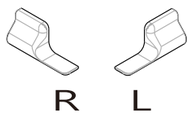 R L x2	12	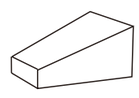 x1	13	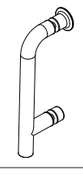 x1
14	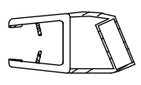 x1	15	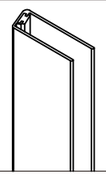 x1	16	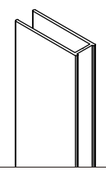 x1		

HARDWARE CONTENT

1	 ST3.5*25 x6	17	 x6	18	 x6
19	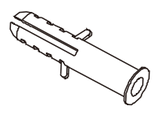 x10	20	 ST4*40 x10	21	 ST4*12 x8

2 piece for each as spare part.

TOOLS REQUIRED

Drill Bits

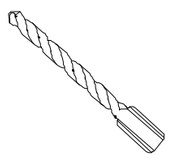

3.2/6mm dia.
HSS

Screw Driver

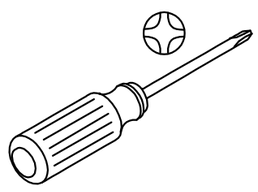

Drill



Level

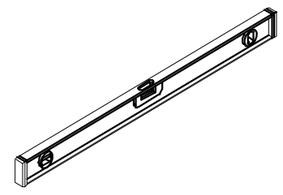

Silicone

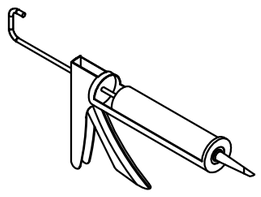

Measuring Tape

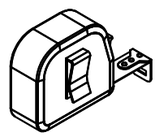

Soft Head Hammer

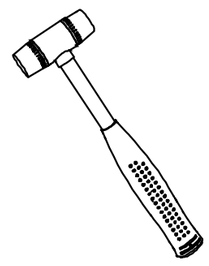

Pencil

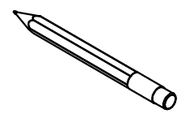

Knife

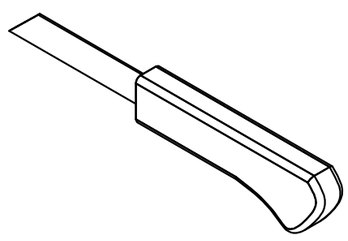

Sealant

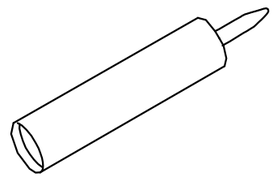

MASONRY DRILL BIT FOR TILE Ø6mm



Safety Glasses

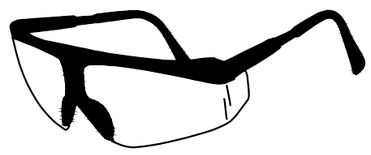

Glove



Carpenter's Squarer

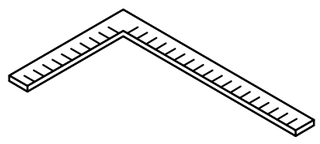

Masking or painter's tape

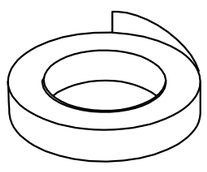

Hack Saw

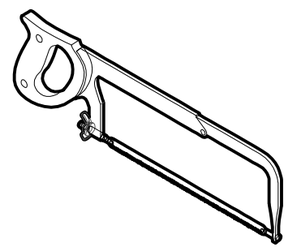

Metal File

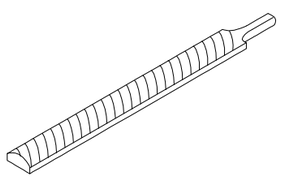

SAFETY INFORMATION

CAUTION

Please carefully read the following important safety information before handling or installing this shower. There is a risk of serious injury while handling this product. To minimize these risks, please note:

- Always wear safety glasses and gloves while handling.
- Always follow the installation instructions.
- Inspect glass for damage before installation.
- Extreme caution should be taken while handling the glass during installation as the tempered glass may shatter if in contact with a hard surface.
- Do not cut or modify the tempered glass as it will shatter if cut.
- Carefully remove product from packaging and keep packaging until installation is complete.
- Inspect all parts for damage or missing; if there is damage or part missing to the unit prior to installation, please contact customer service at the number provided in this guide.
- Cover the drain with tape to prevent the loss of small parts.
- The shower base and finished walls should be installed before beginning the shower door installation.
- During the installation,protect the shower floor with a drop cloth to avoid damage.
- This product should be installed by two people who are familiar with construction requirements.Professional installation is recommended!
- Keep this installation manual for future reference.

NOTE: Two people should perform this installaton.



Model Dimensions

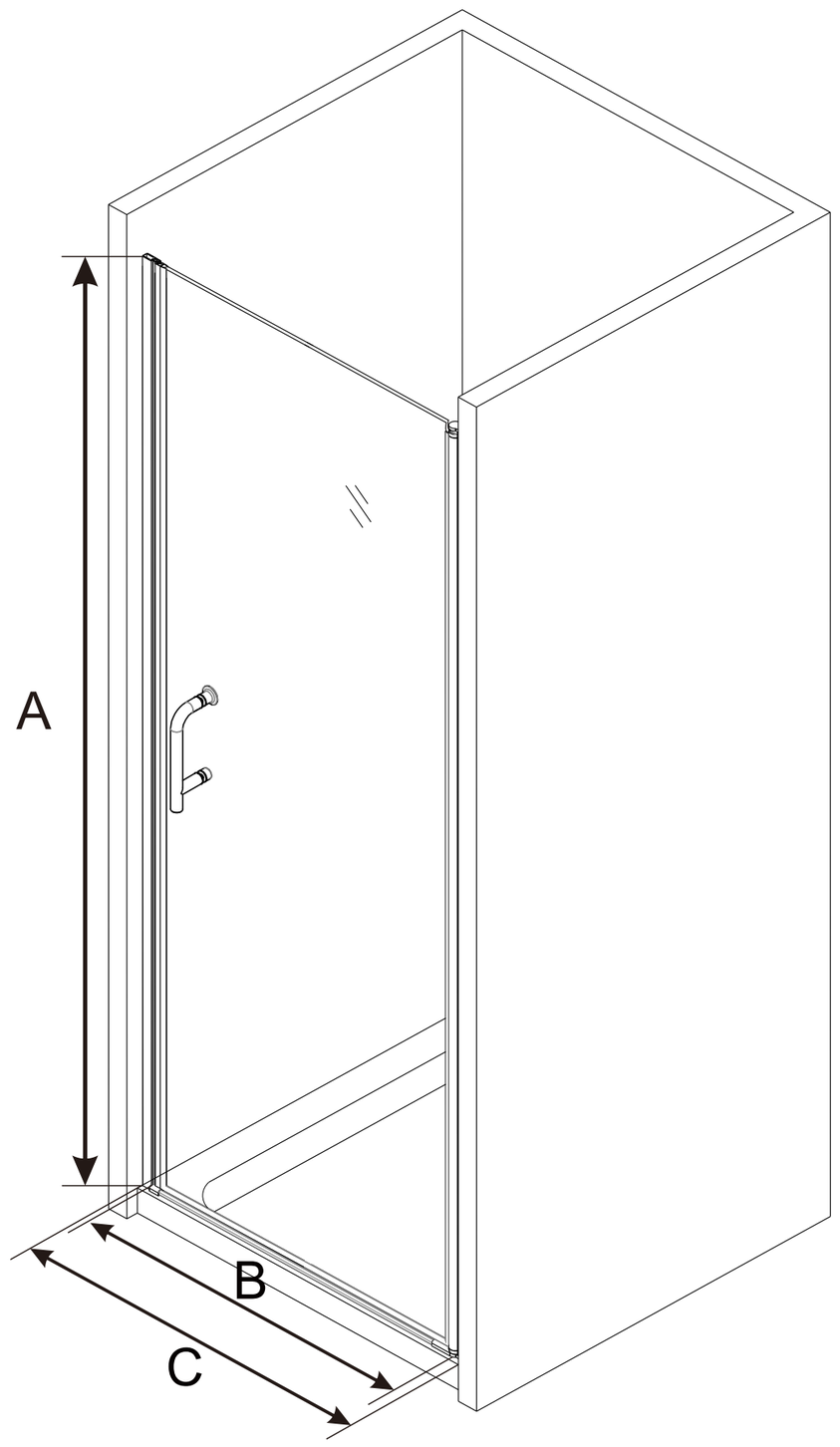

configuration dimensions:

A Product Height	B Model width	C Adjustable width	D Opening width
72"	30"	30"~31 1/4"	27"
	32"	32"~33 1/4"	29"
	34"	34"~35 1/2"	31"
	36"	36"~37 1/4"	33"

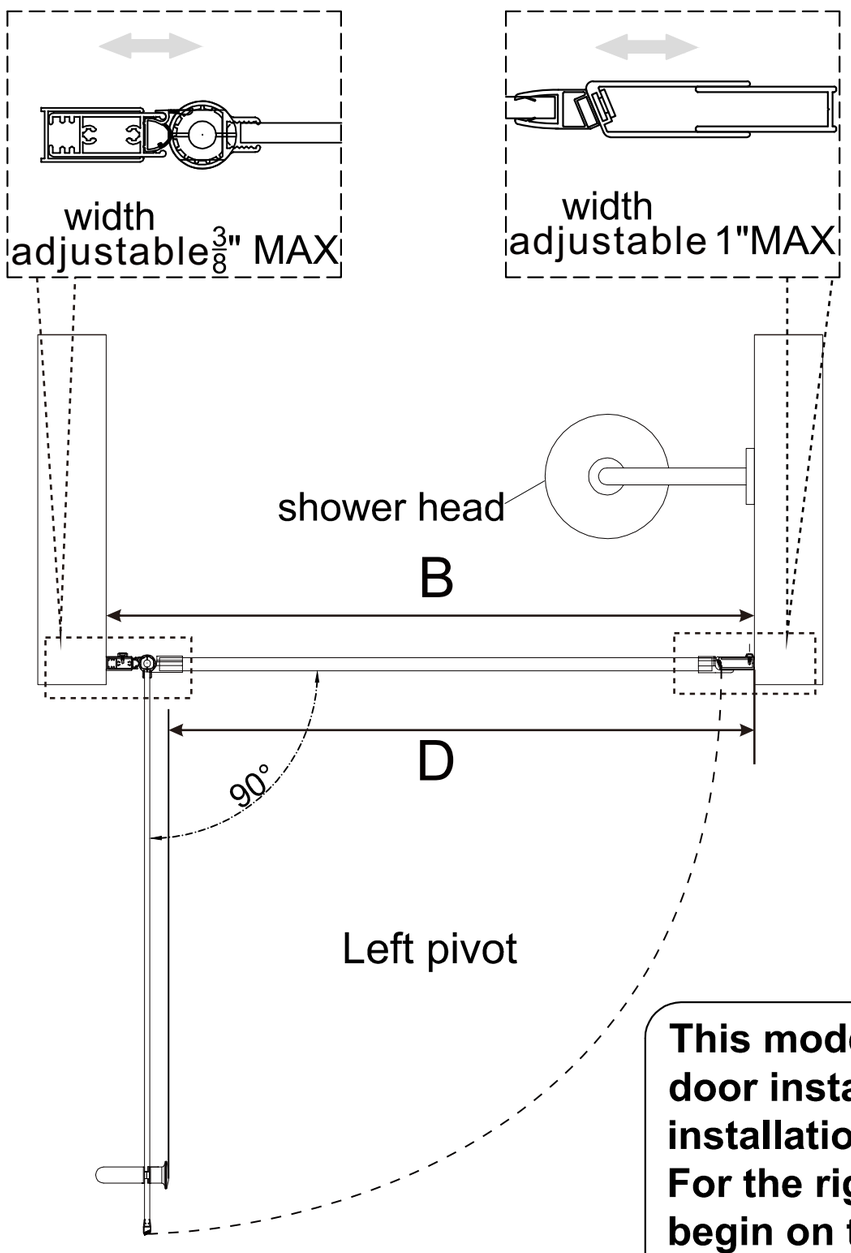

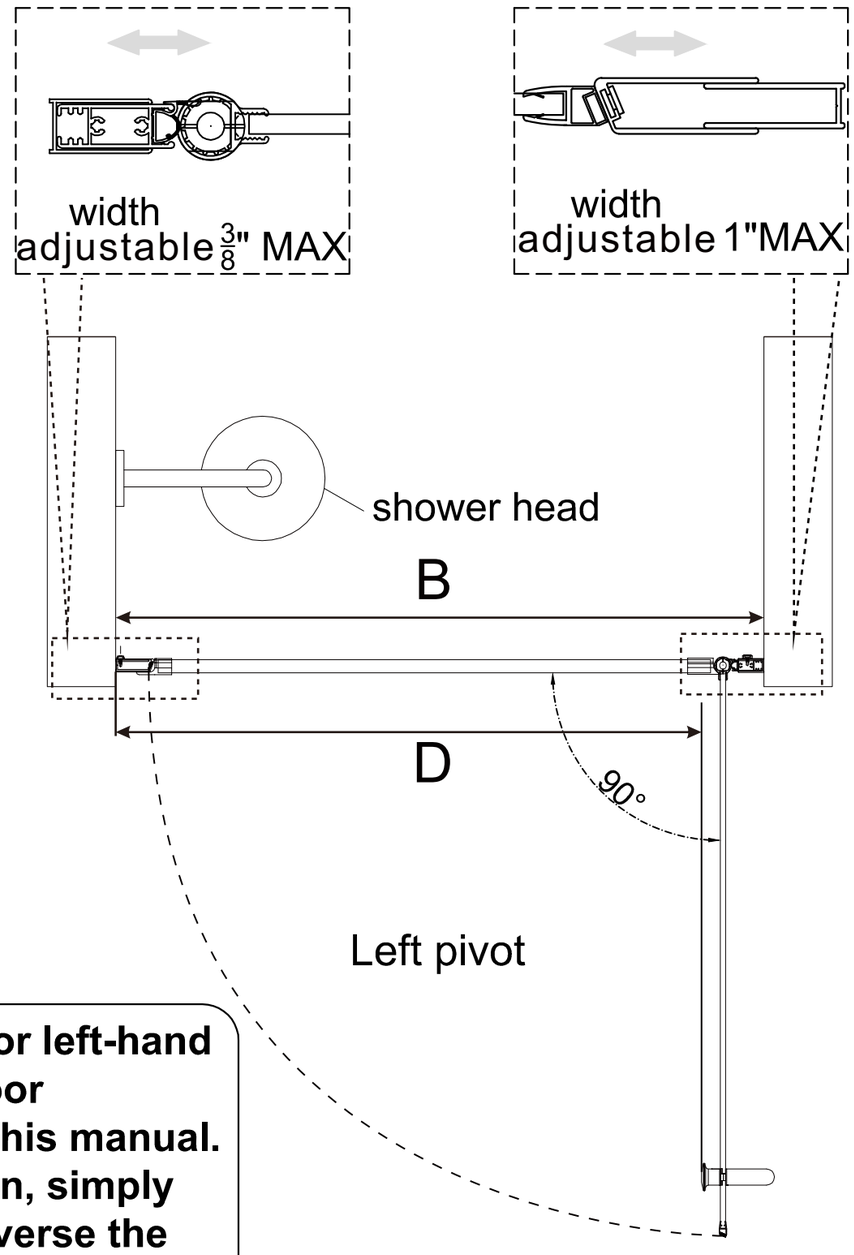

NOTE

This model is reversible for right or left-hand door installation. The left-hand door installation is shown throughout this manual. For the right-hand door installation, simply begin on the opposite wall and reverse the orientation of the installation steps shown.

1-1 Wall Jamb Installation

NOTE

Confirm the Wall jamb is plumb with a level before marking the location of the holes for drilling.

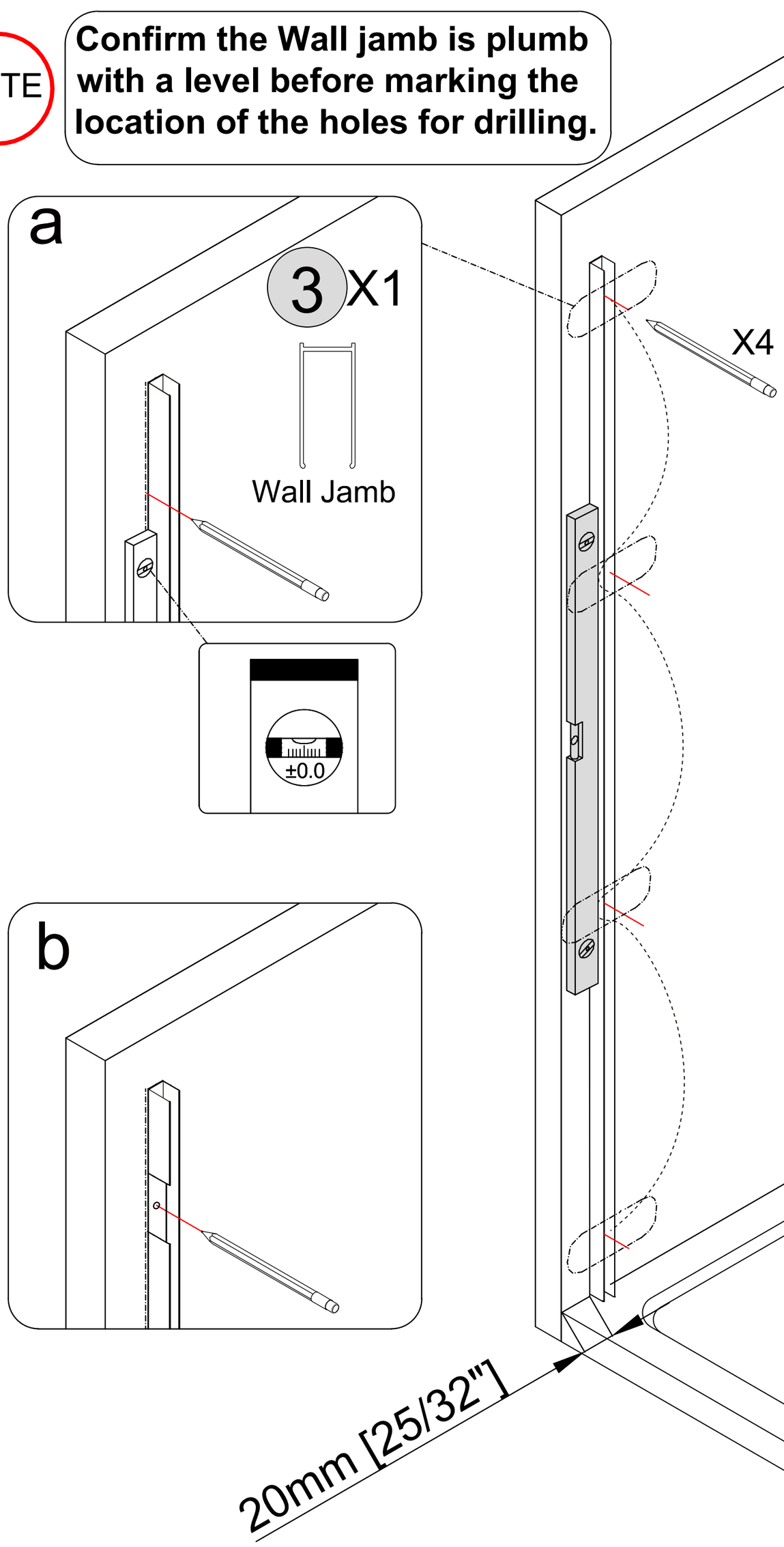

NOTE

Center the Wall jamb (3) on the Threshold.

Leave 20mm [25/32"] from edge of shower pan.

1-2 Wall Jamb Installation

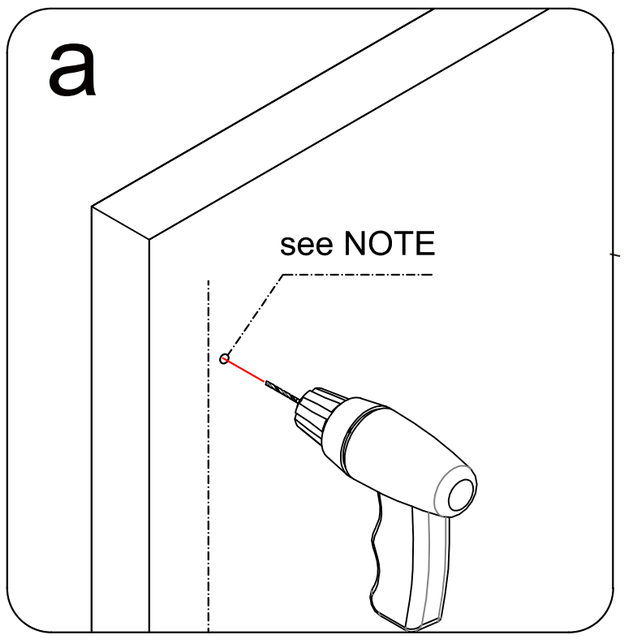

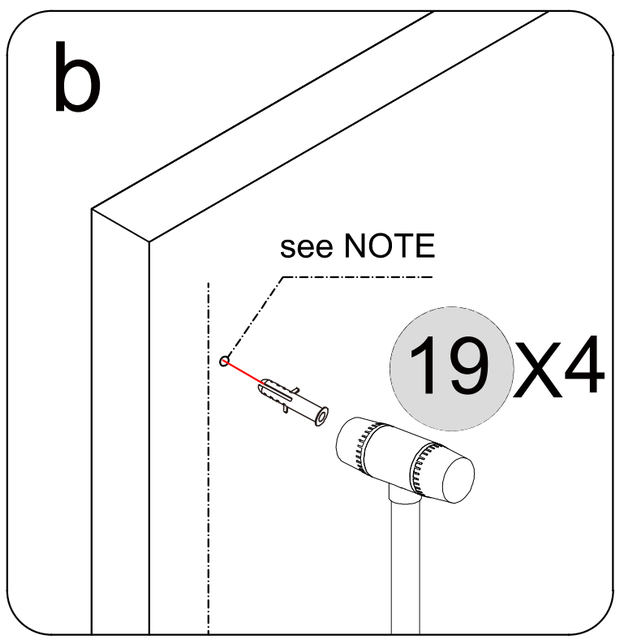

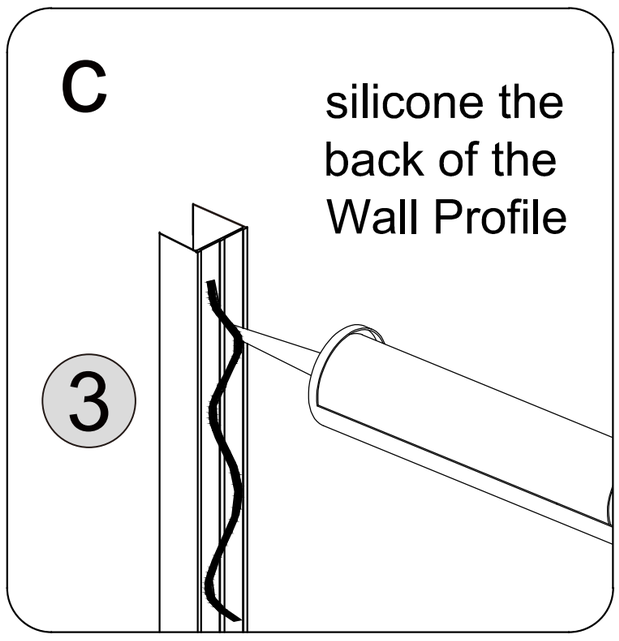

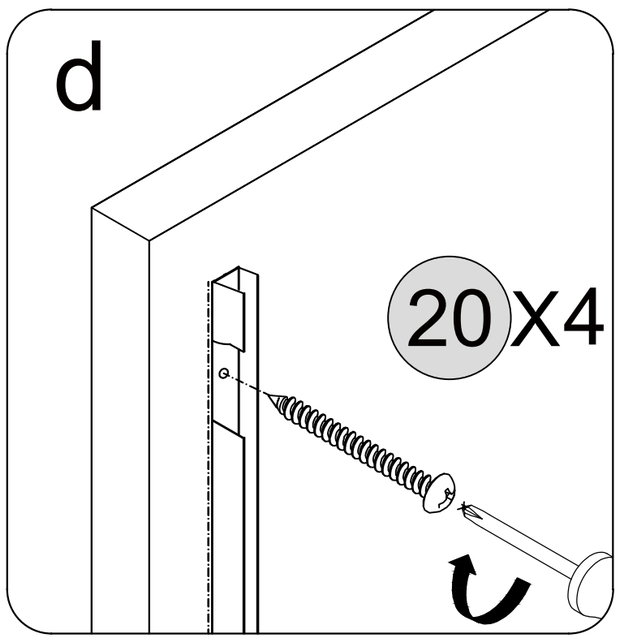

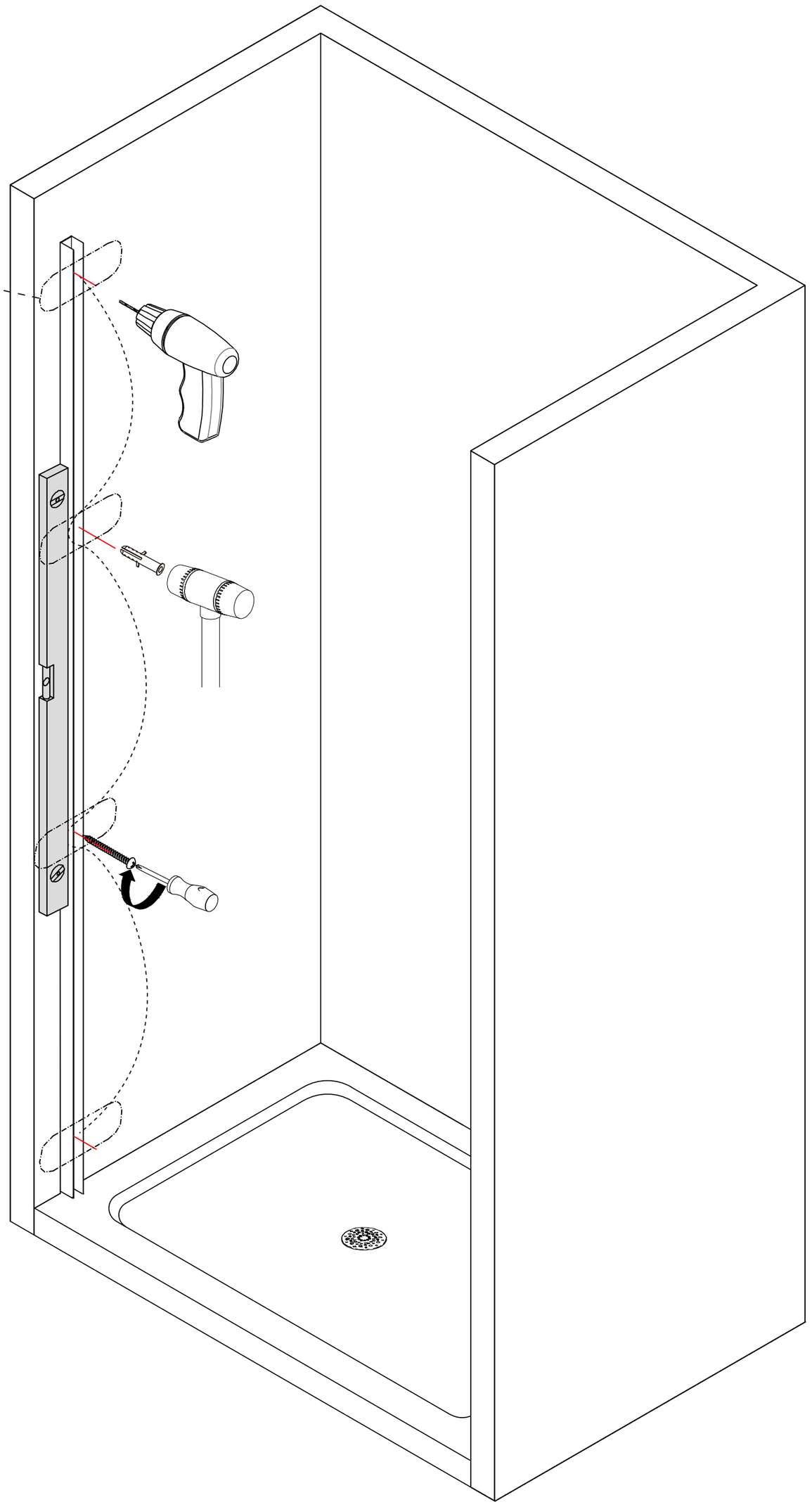

NOTE

- If a Stud is present behind the wall:

drill a Ø3/16”(4mm) hole up to the stud,
drill an Ø1/8”(3mm) pilot hole into the stud and
use the ST4.0 x 40mm Pan Head Screws (20)
OR

- If No Stud is present behind the wall:

drill a Ø1/4”(6mm) hole and insert the Wall Anchors
and use the ST4.0 x 40mm Pan Head Screws.

1-3 Wall Jamb Installation

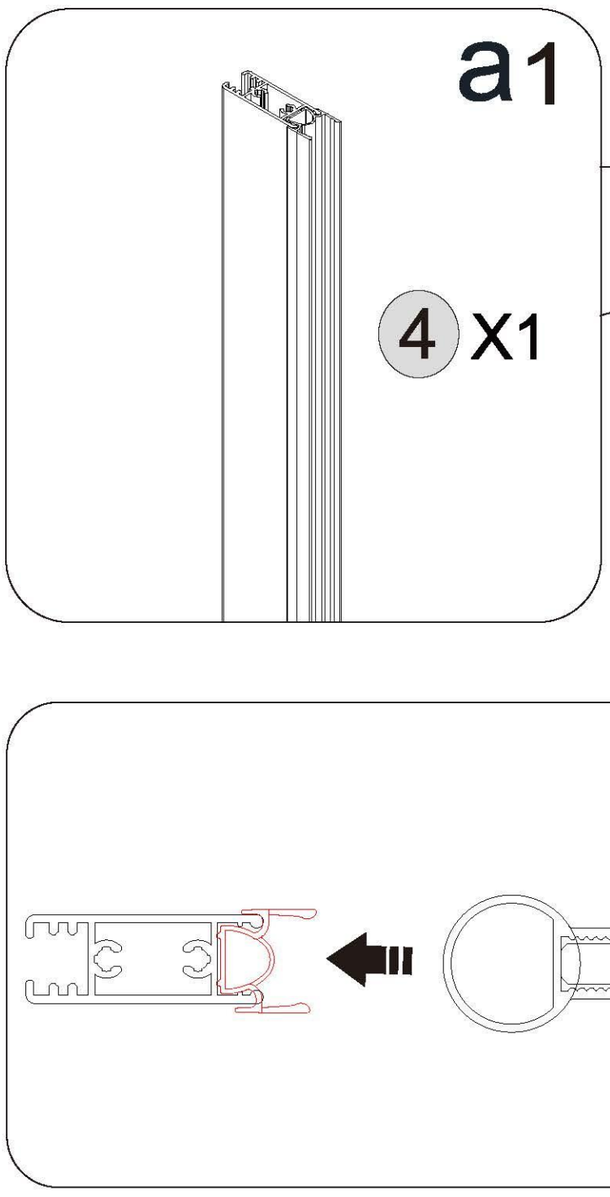

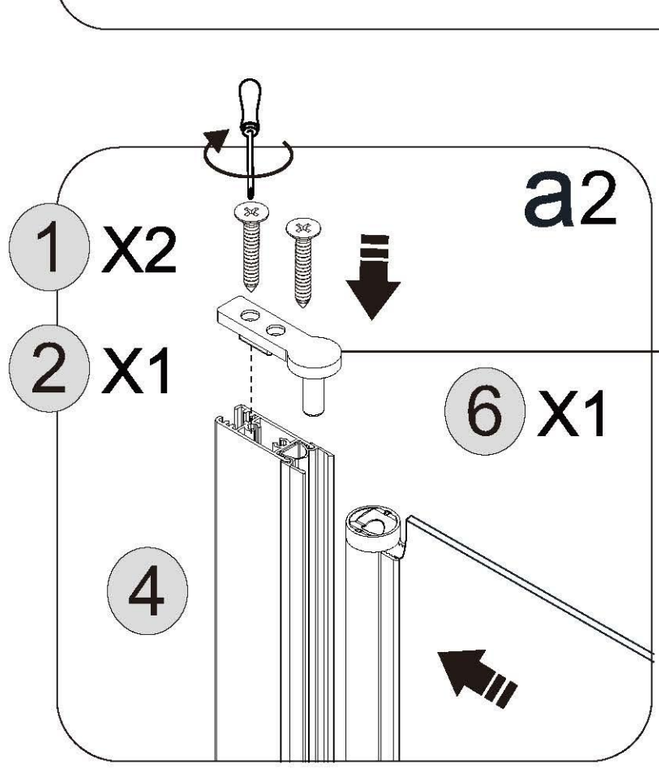

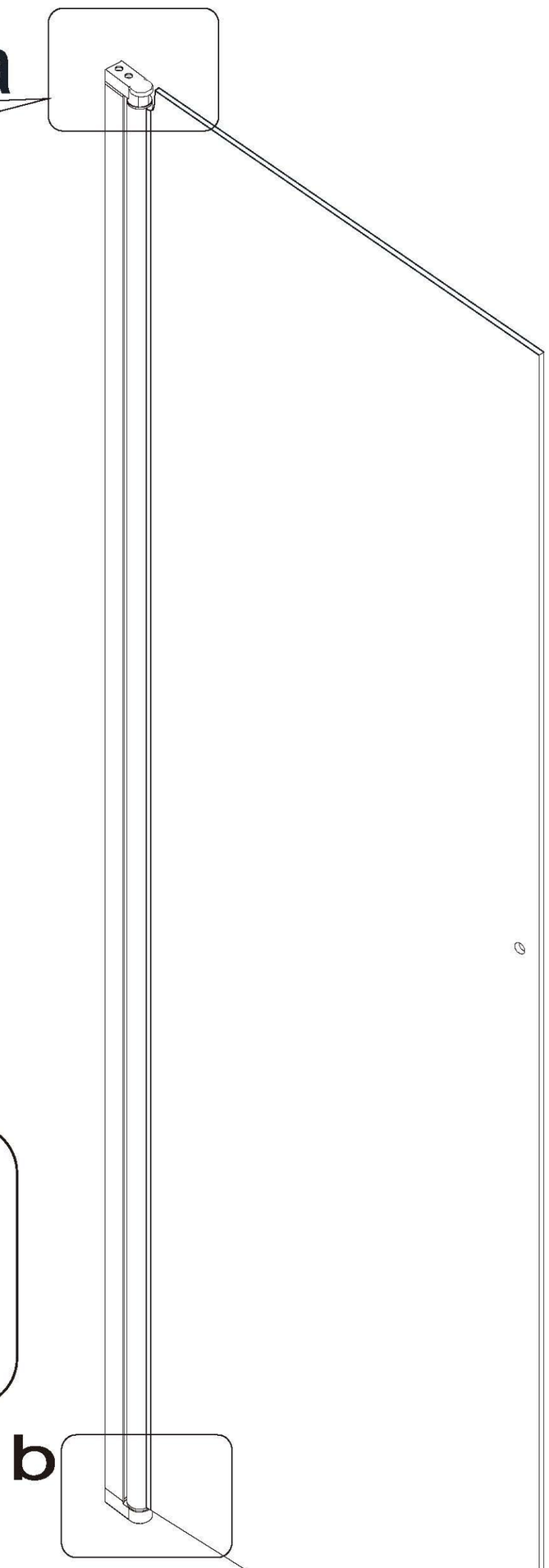

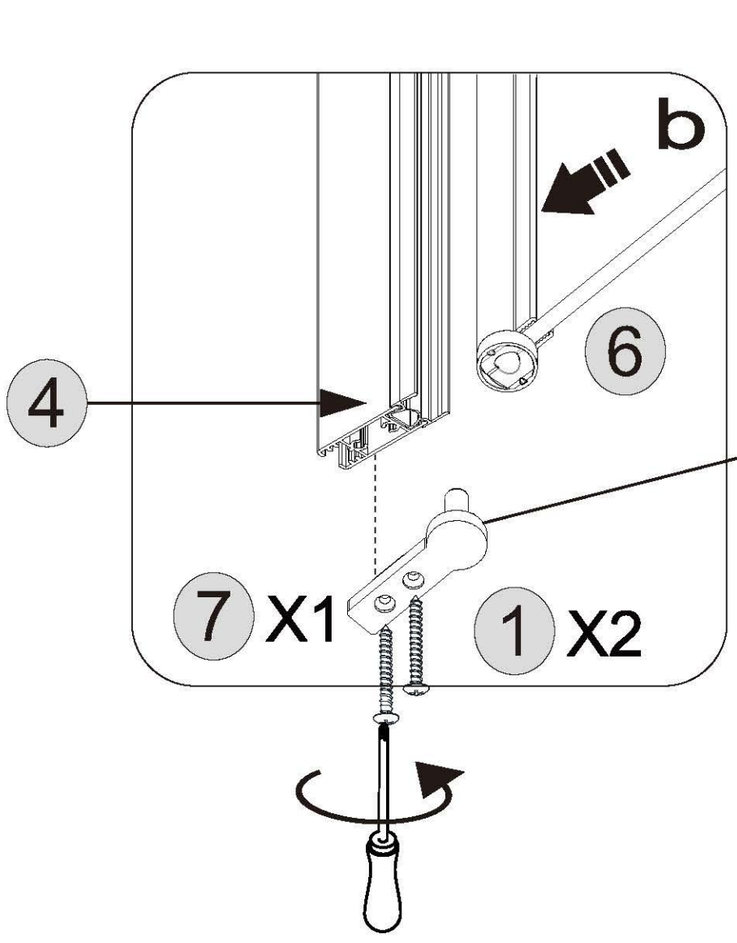

NOTE

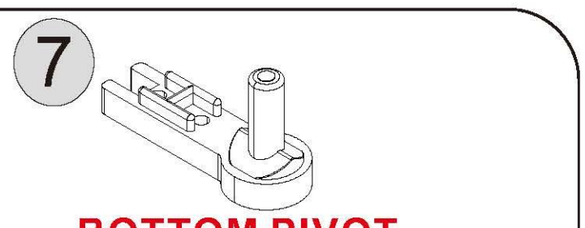

Do not install incorrectly or in reverse. Otherwise, the product lifting function will fail.

NOTE

- <u>If a Stud is present behind the wall:</u>

drill a Ø3/16”(4mm) hole up to the stud,
drill an Ø1/8”(3mm) pilot hole into the stud and
use the ST3.5x25mm Pan Head Screws (1)
OR

- <u>If No Stud is present behind the wall:</u>

drill a Ø1/4”(6mm) hole and insert the Wall Anchors
and use the ST4.0 x40mm Pan Head Screws.

2 Door panel Installation

NOTE

The Door panel Profiles can be adjustable up to 3/8” within the Wall Jamb for overall width or to correct for out-of-plumb conditions within the model size. Screw them together after making final adjustments.

a

wide adjustable $\frac{3}{8}$"MAX

3

Return panel can be rotated 180 degrees

b

6

15mm

12

NOTE

Place wood shim(12) onto the threshold to provide proper spacing beneath the door glass.

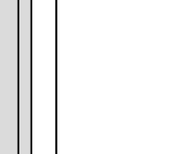

12

Make any final adjustments to the door so that it is level and plumb in the opening.

3 Magnetic strip Install to door panel

a

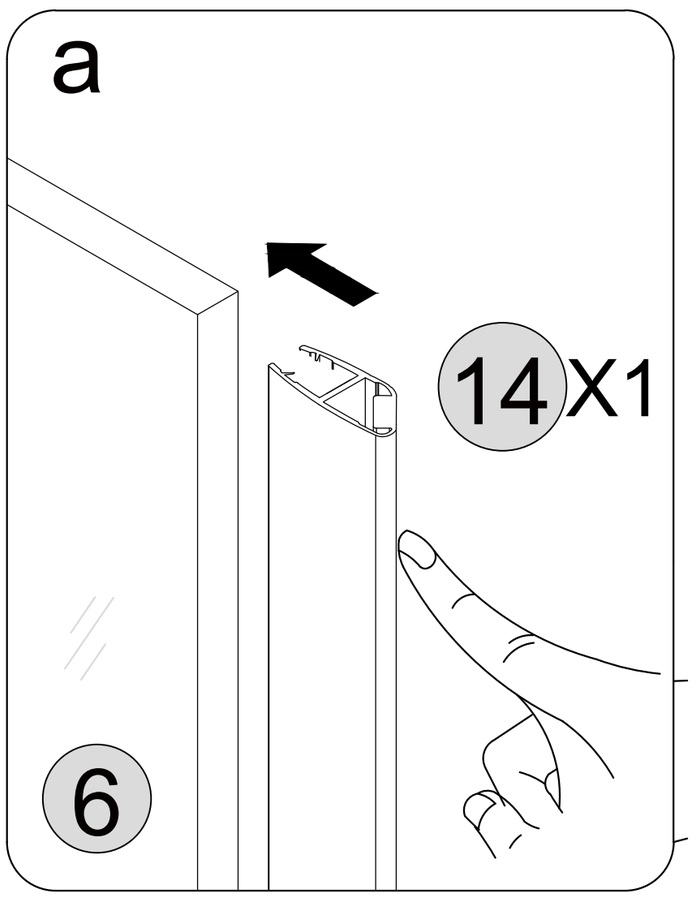

b

Magnetic Seal
Aluminum channel

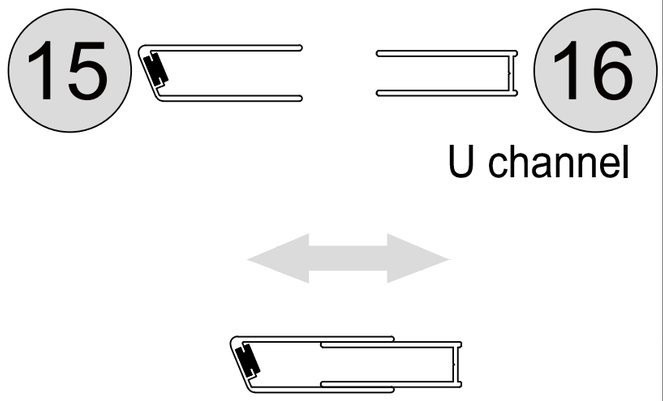

1"max wall adjustment

c

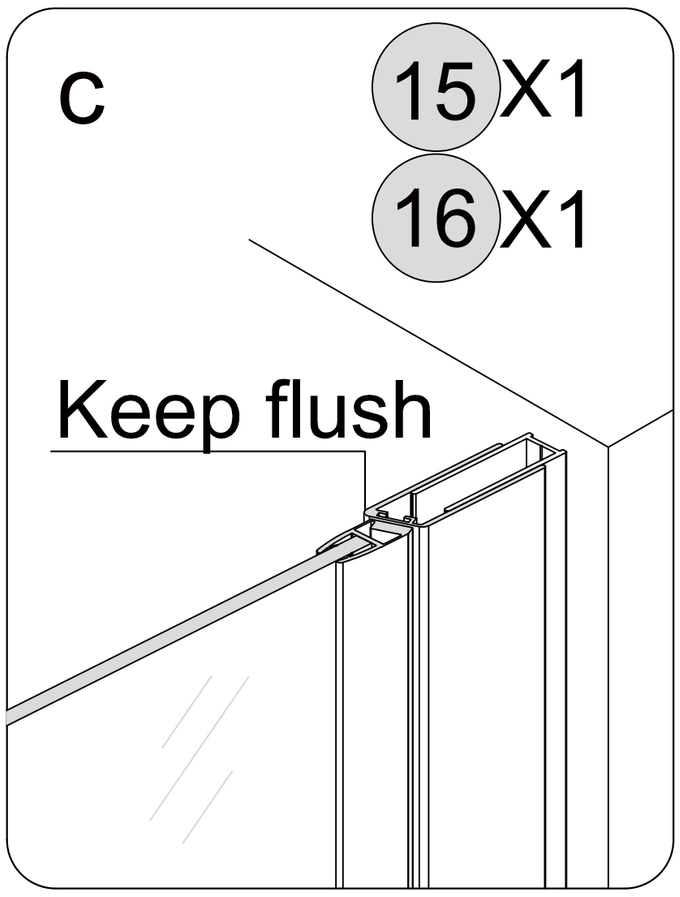

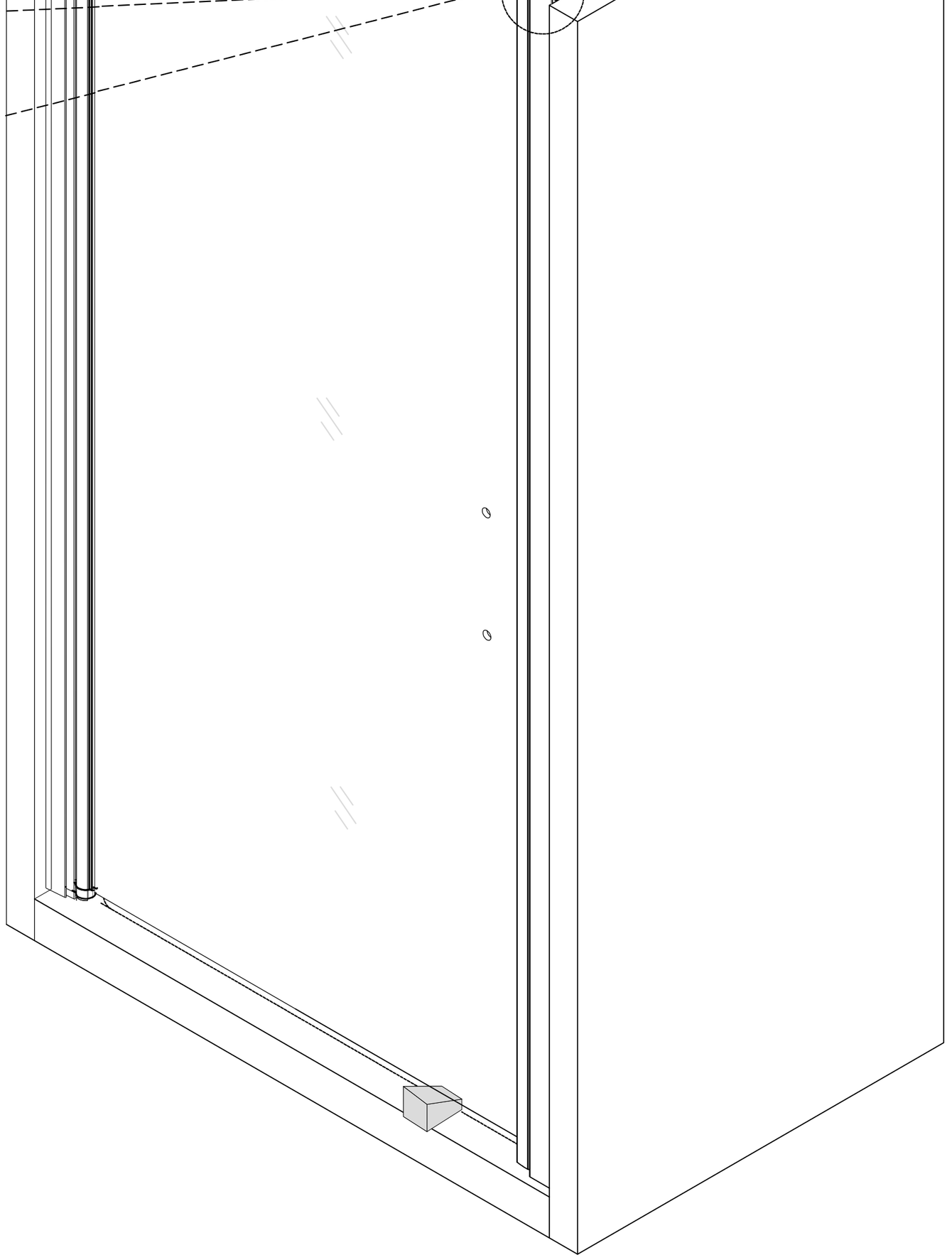

NOTE

1、Magnetic strip Install to door panel.

2、Put 14, 15 ,16 together before fasten the glass door,make all these parts keep flush.

4 Fixed the door panel

NOTE

After final adjustments, drill Ø1/8” holes in the Wall Jamp (3). Drill only through the first layer of the Door panel Profile and install the ST4.0x12mm Pan Head Screws (21) using the Decorative Covers and Washers (17)

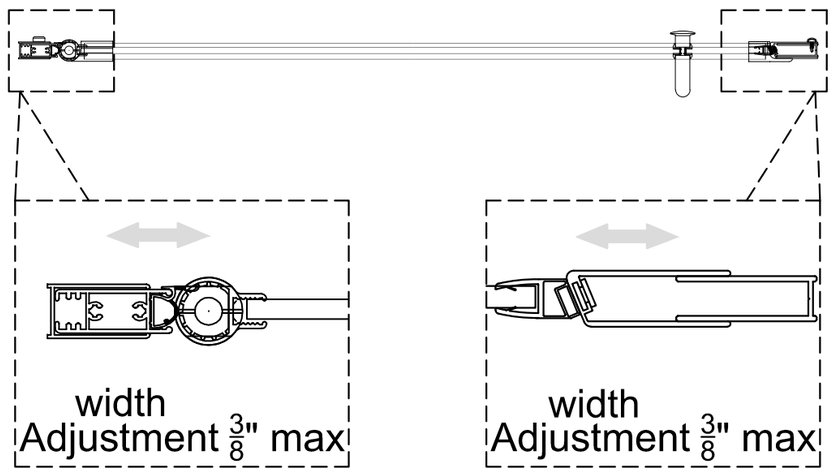

Inside View

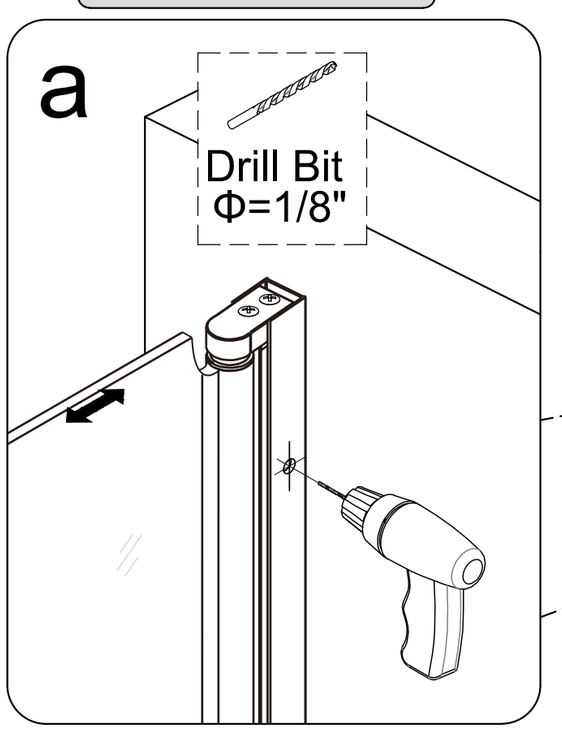

Keep flush

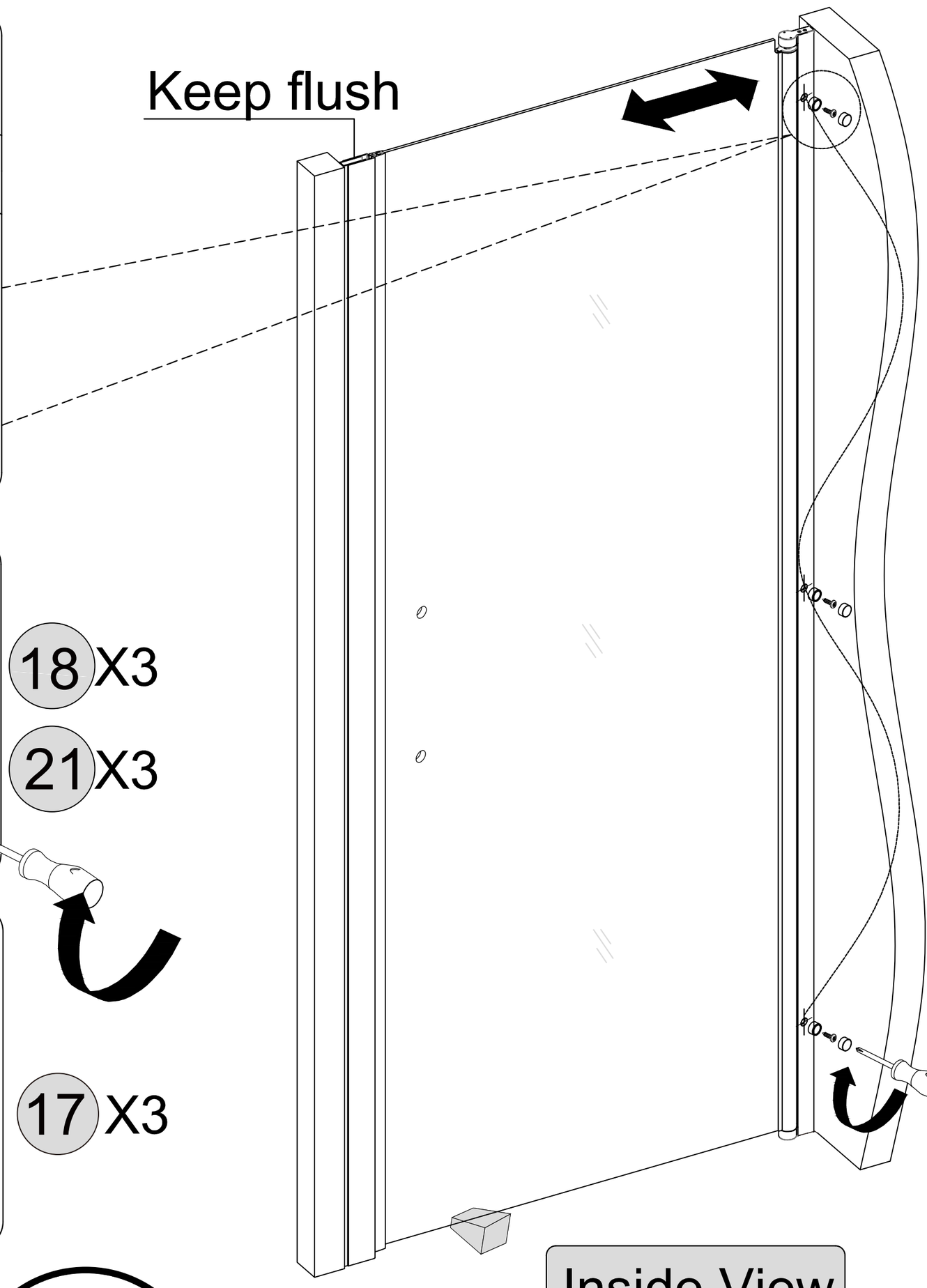

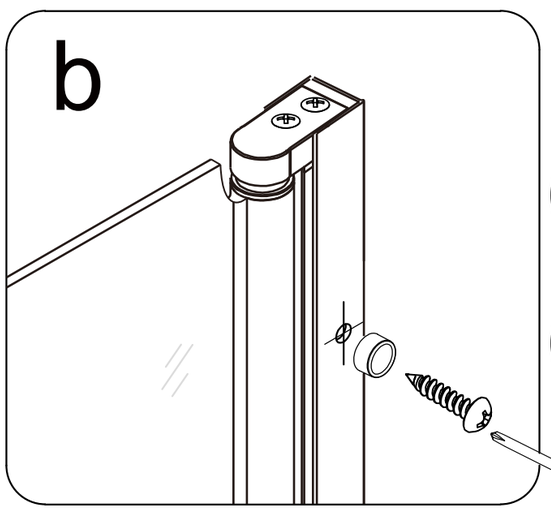

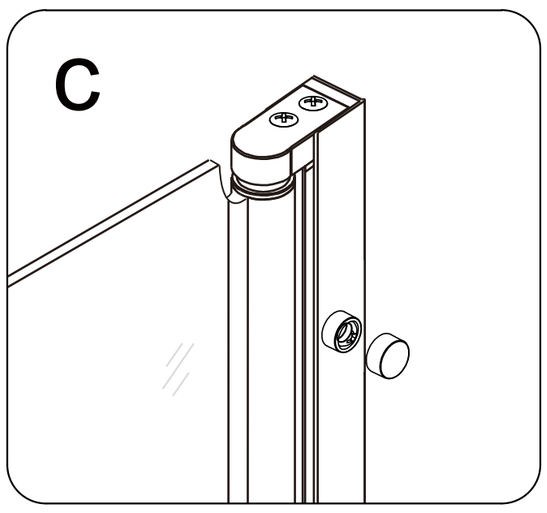

Inside View

NOTE

Include the washers when installing the ST4.0×12mm Pan Head Screws (21) and Decorative Caps (17) .

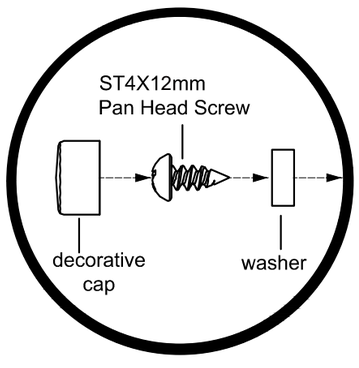

5 Determine the15 &16position

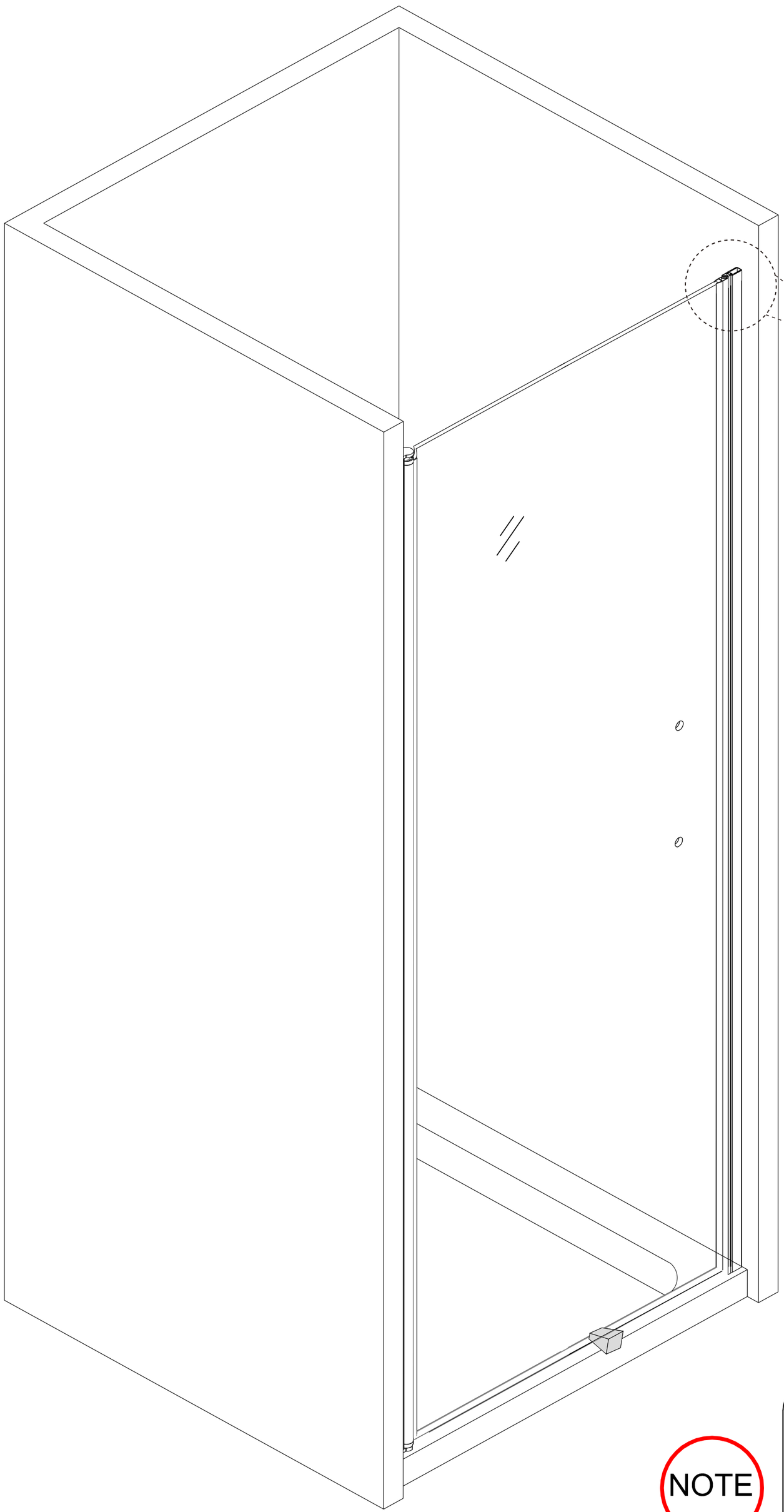

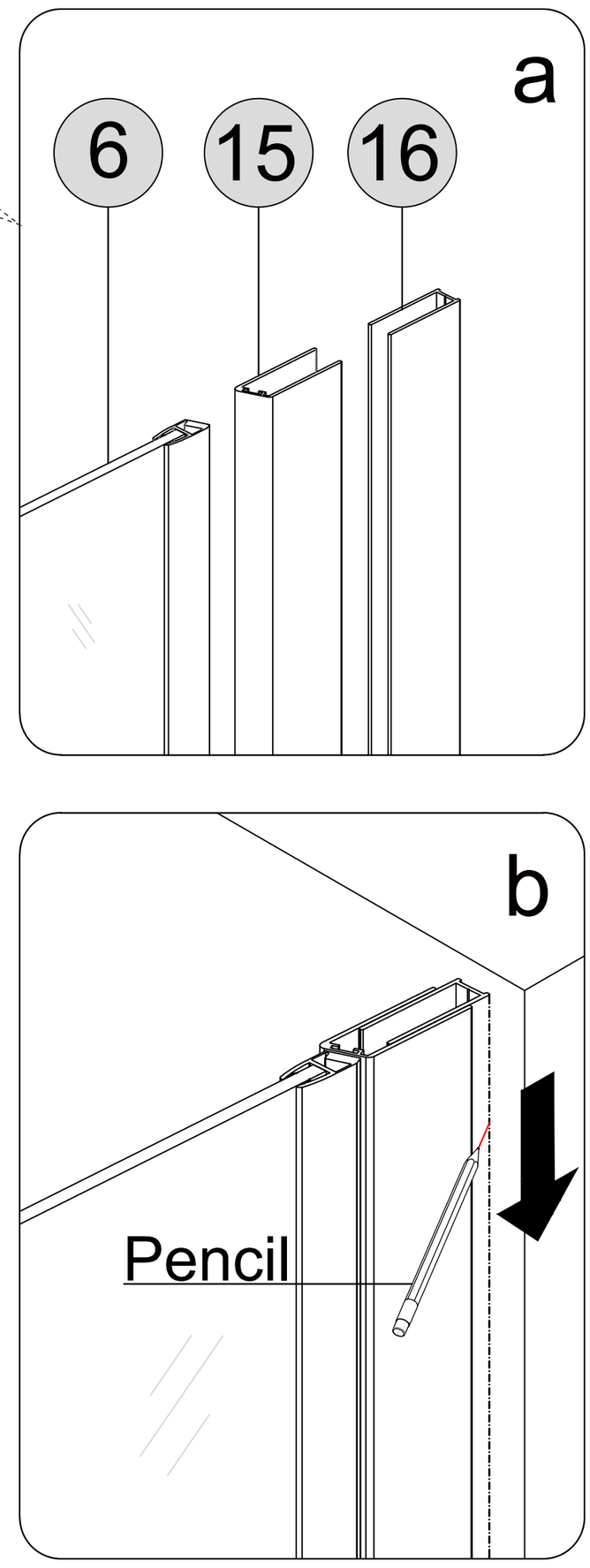

NOTE

Put 6 ,15,16 together, keep flush, mark the position on the wall.

Center the Magnetic Seal Aluminum channel(15) and U channel (16) on the Threshold.

6 U channel Installation

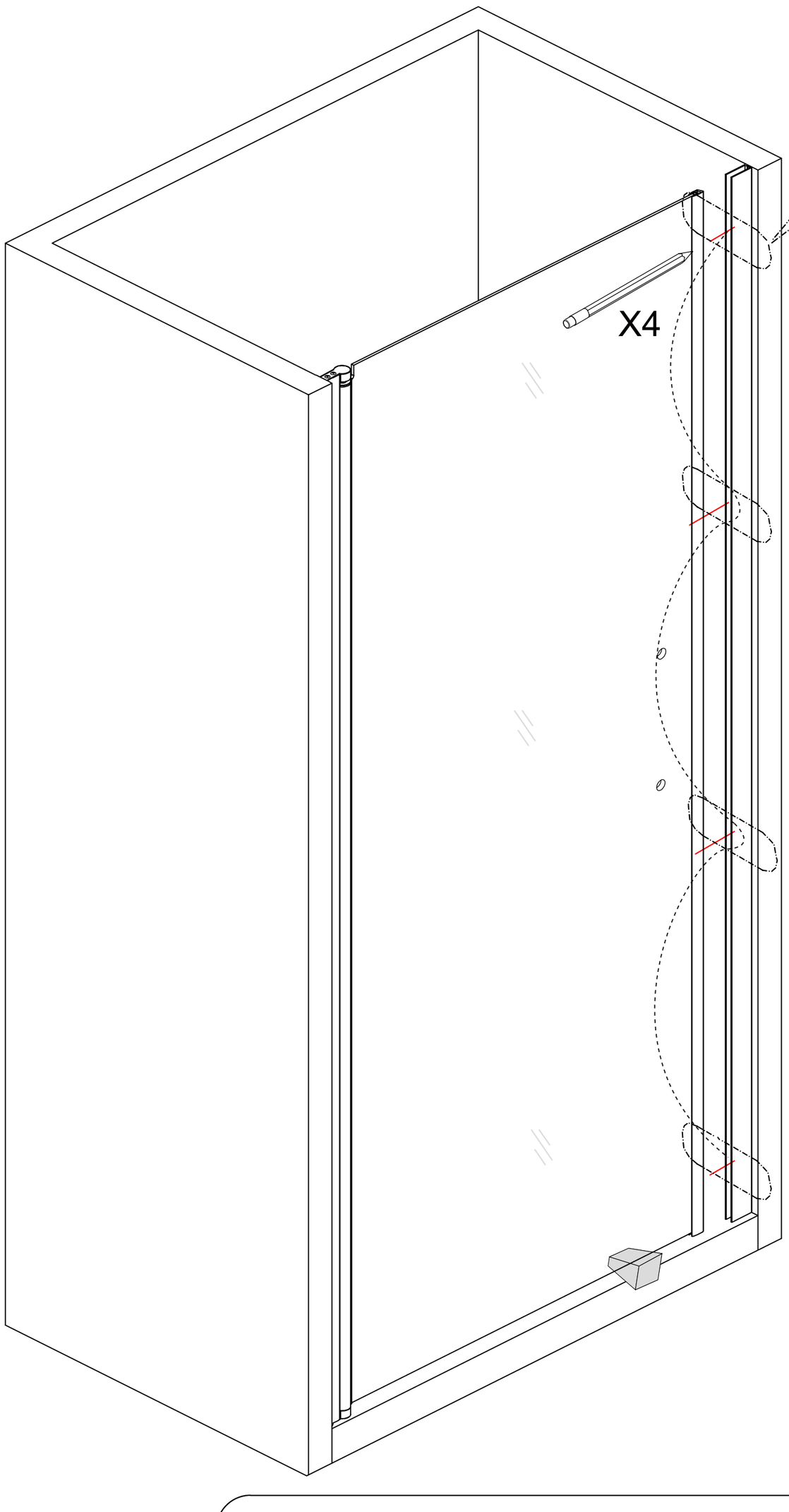

a

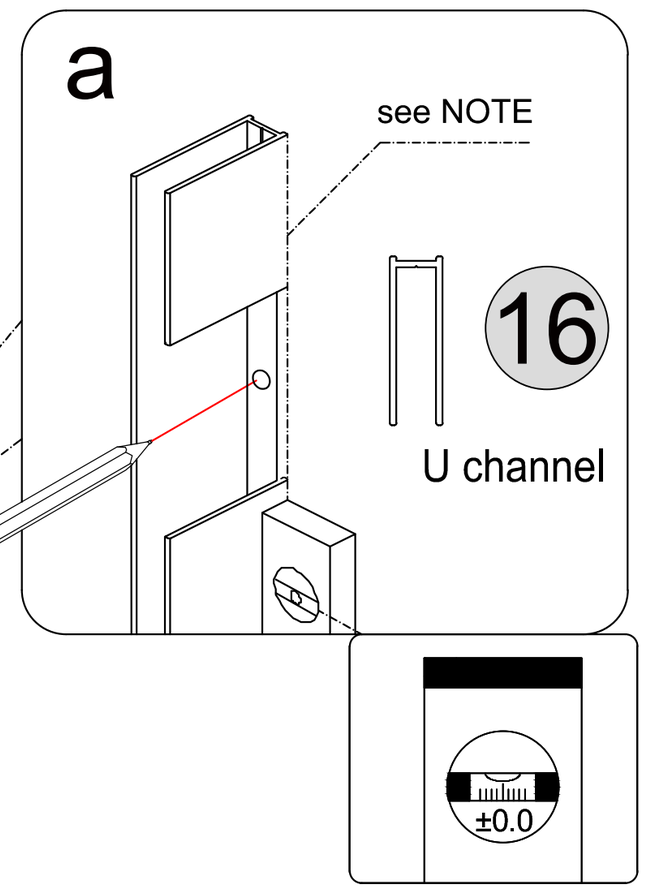

b

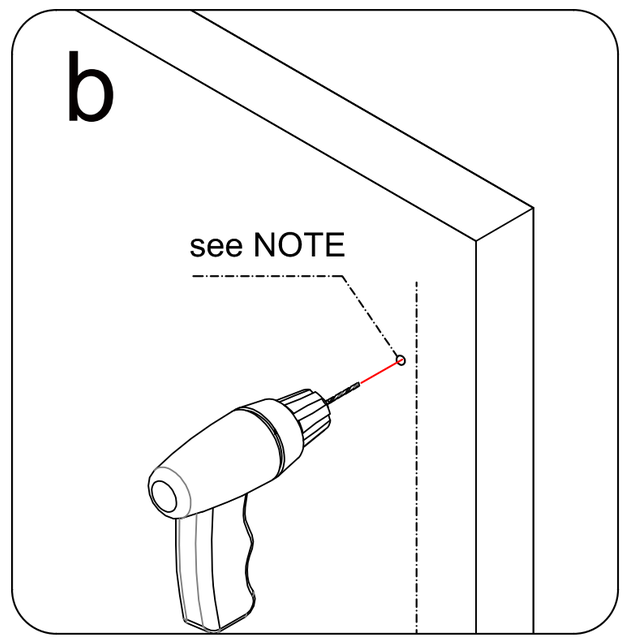

c

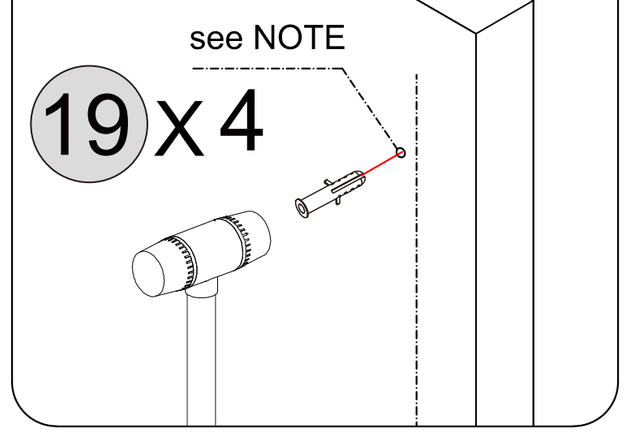

d

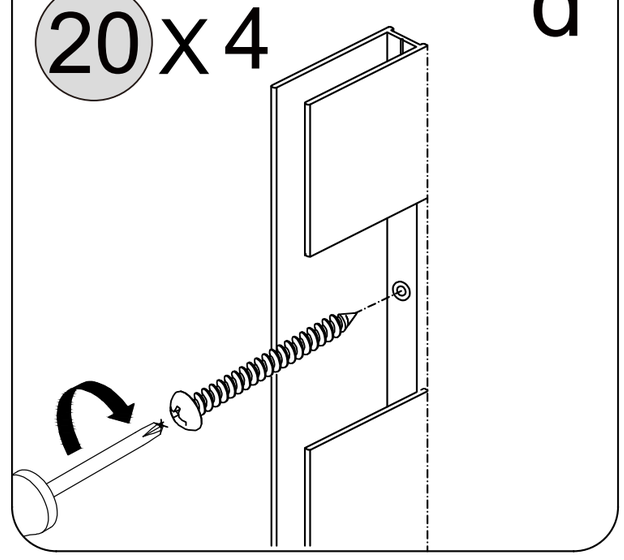

NOTE

- If a Stud is present behind the wall:

drill a Ø3/16”(4mm) hole up to the stud,
drill an Ø1/8”(3mm) pilot hole into the stud and
use the ST4.0 x 40mm Pan Head Screws (20)
OR

- If No Stud is present behind the wall:

drill a Ø1/4”(6mm) hole and insert the Wall Anchors (19)
and use the ST4.0 x 40mm Pan Head Screws (20).

7 Magnetic Seal Wall Jamb Installation

Inside View

a

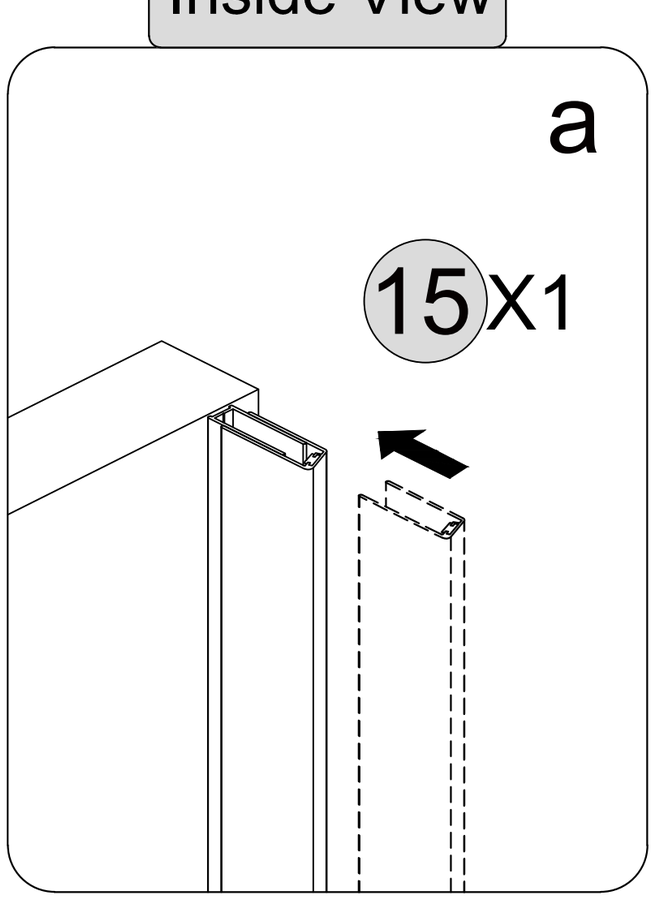

Inside View

b

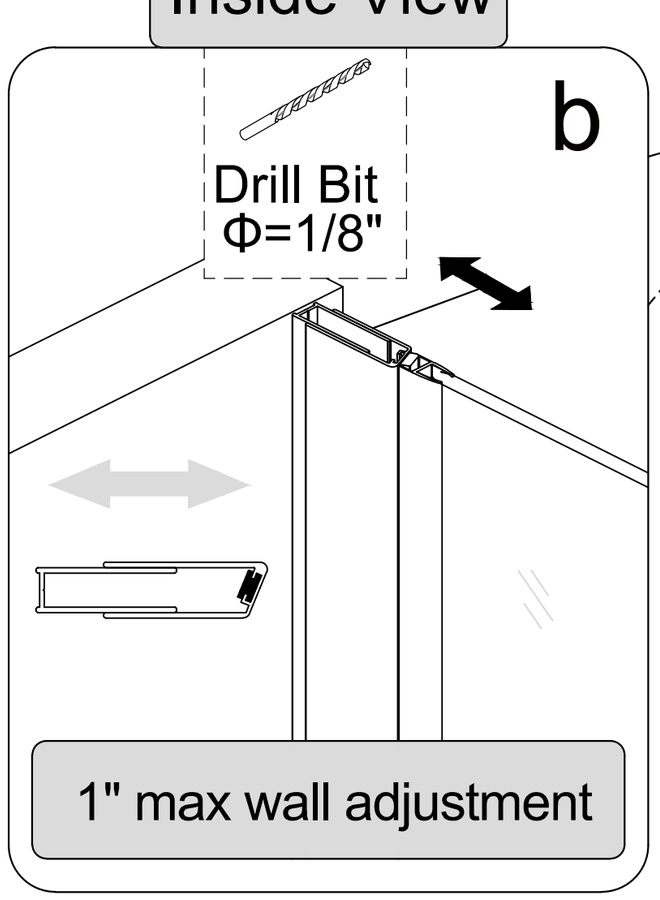

Inside View

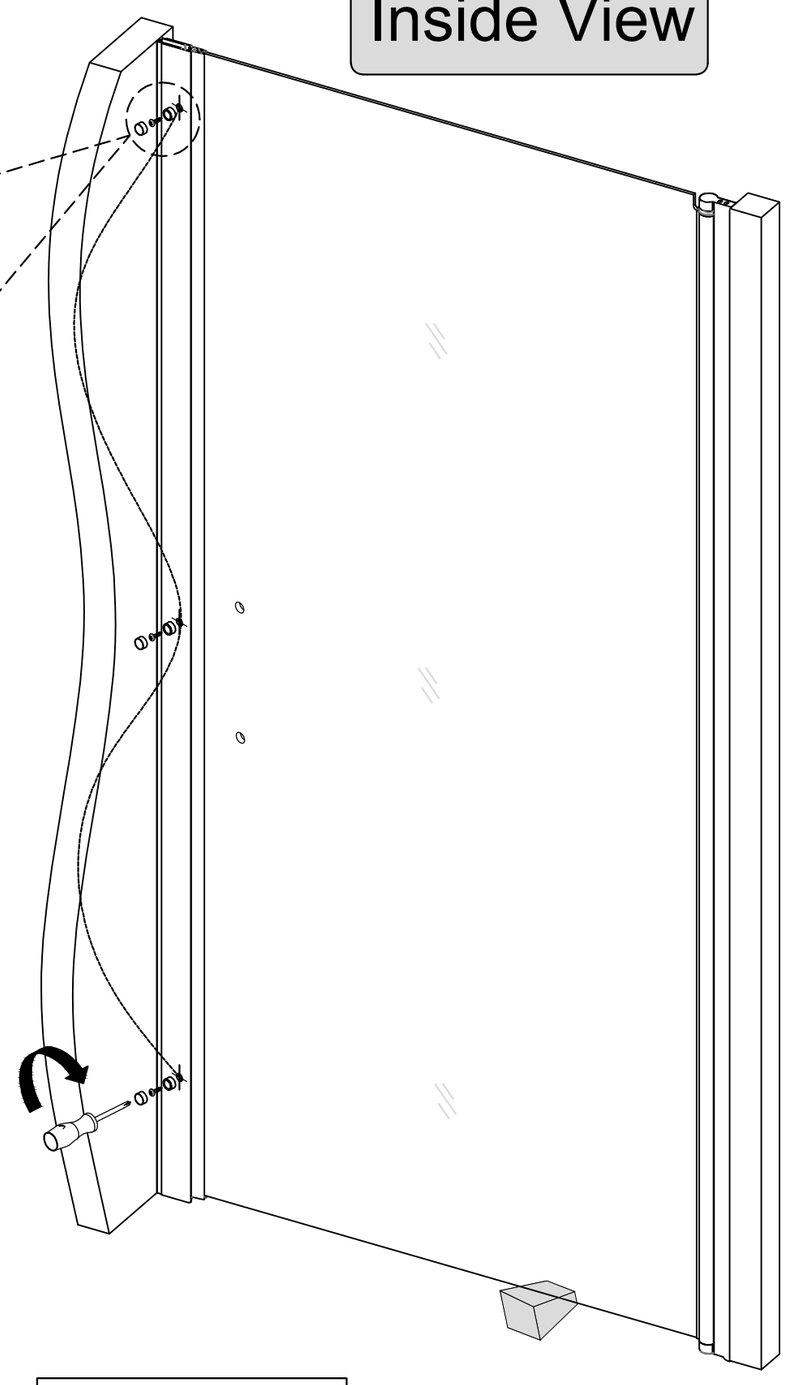

Inside View

c

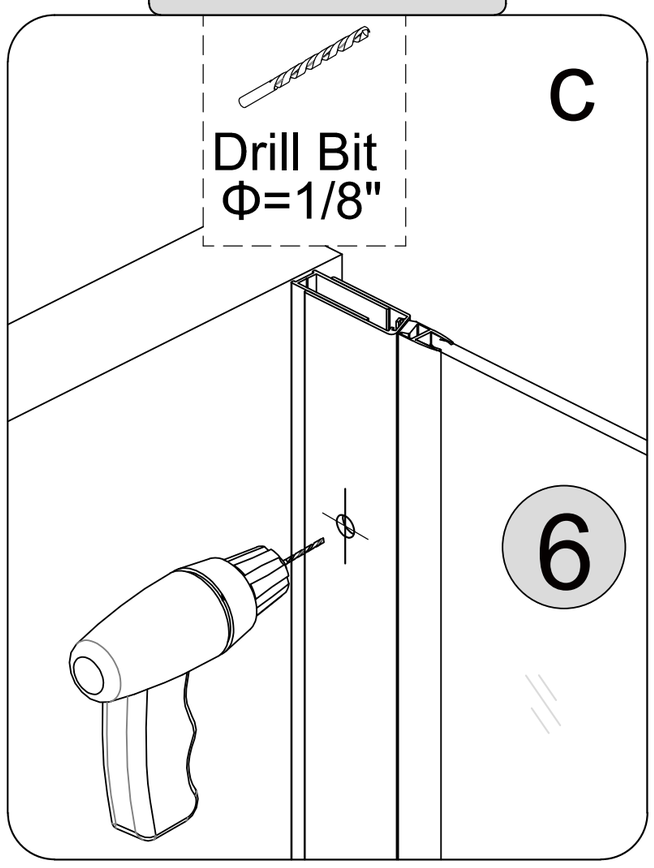

Inside View

d

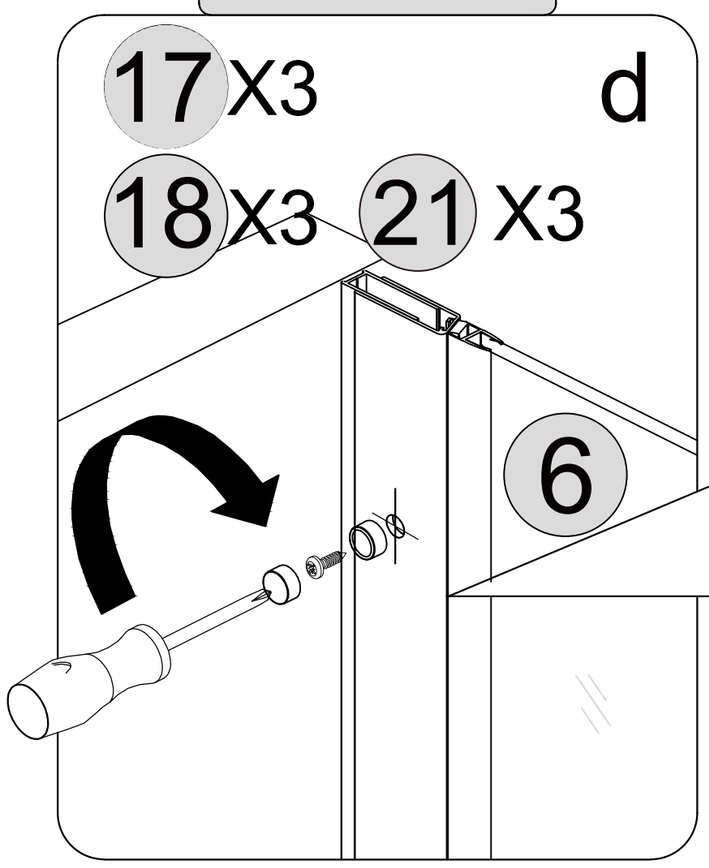

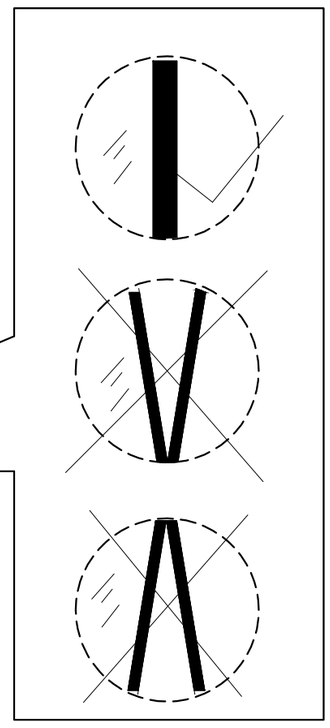



Include the washers when installing the ST4.0×12mm Pan Head Screws (21) and Decorative Caps (17) .

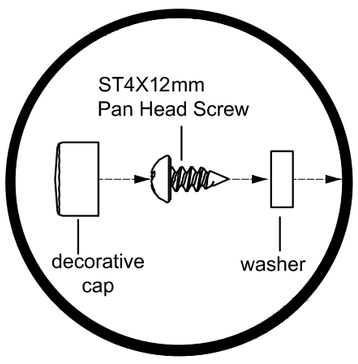



Make sure the magnetic seals close properly!!

8 handle Installation

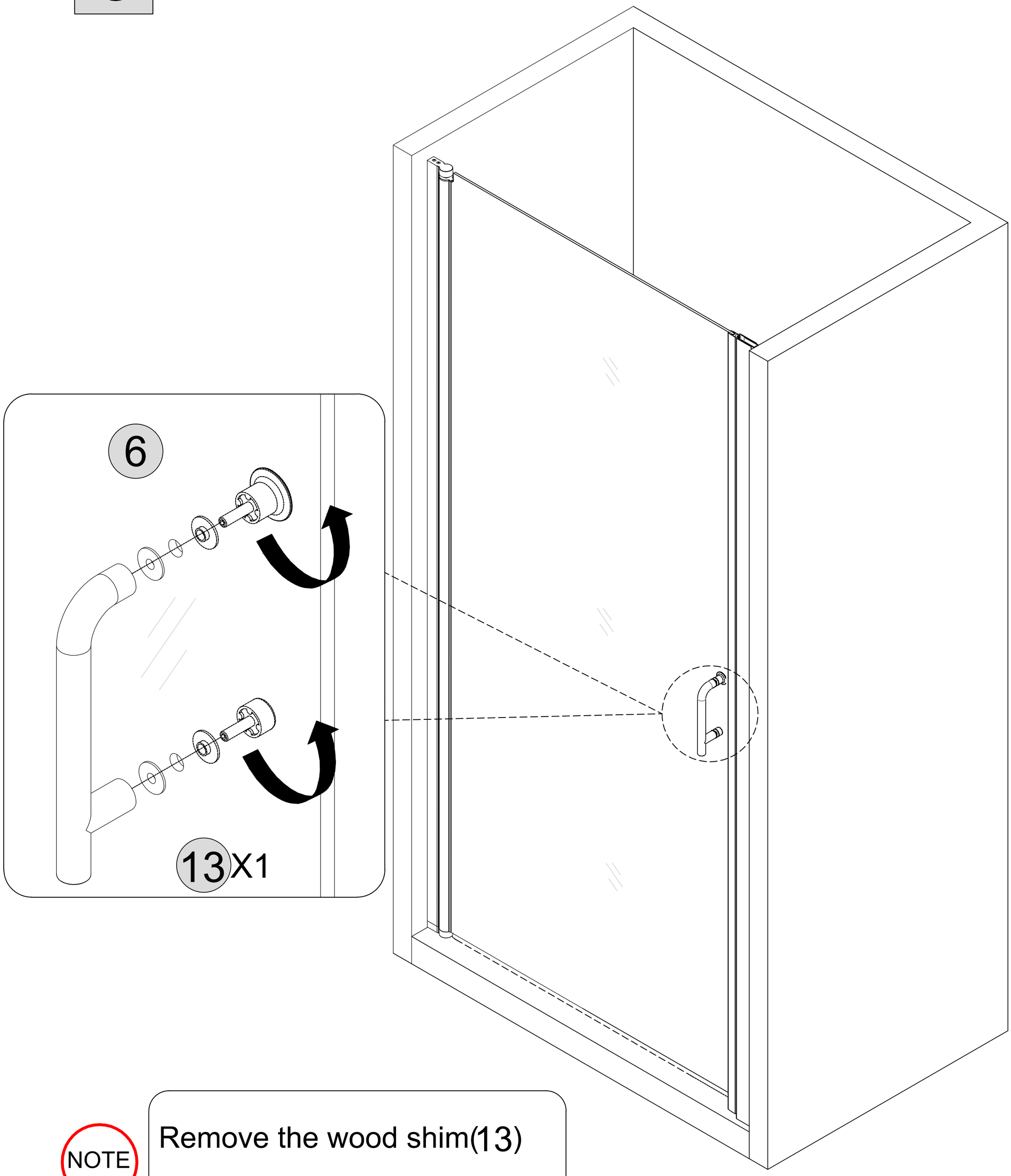

NOTE

Remove the wood shim(13)
and open the door.

9 Bottom Gasket Installation

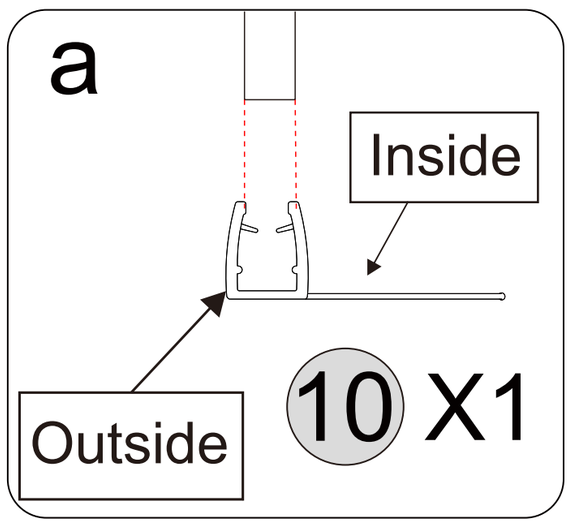

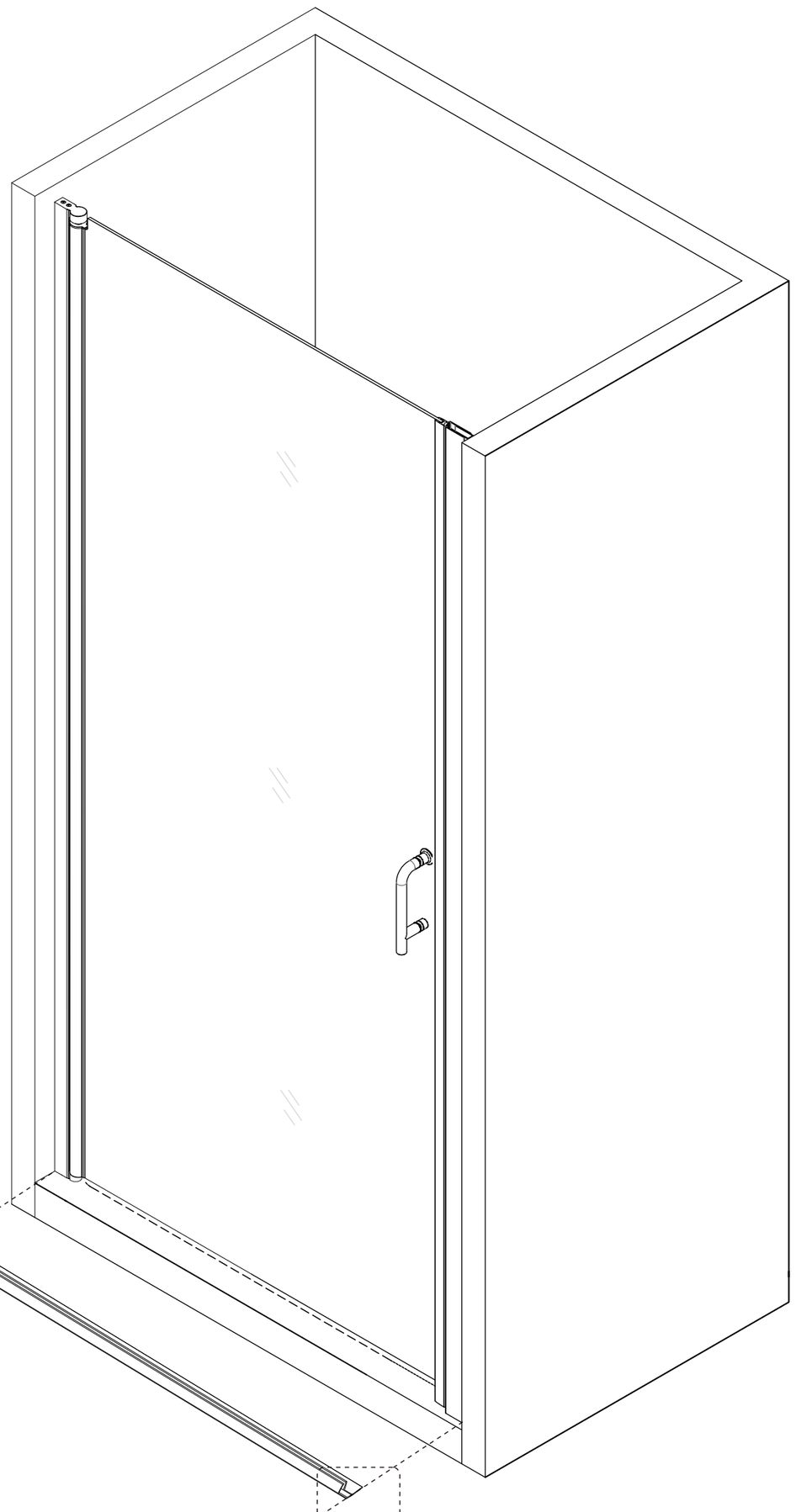

10 Bottom mounting

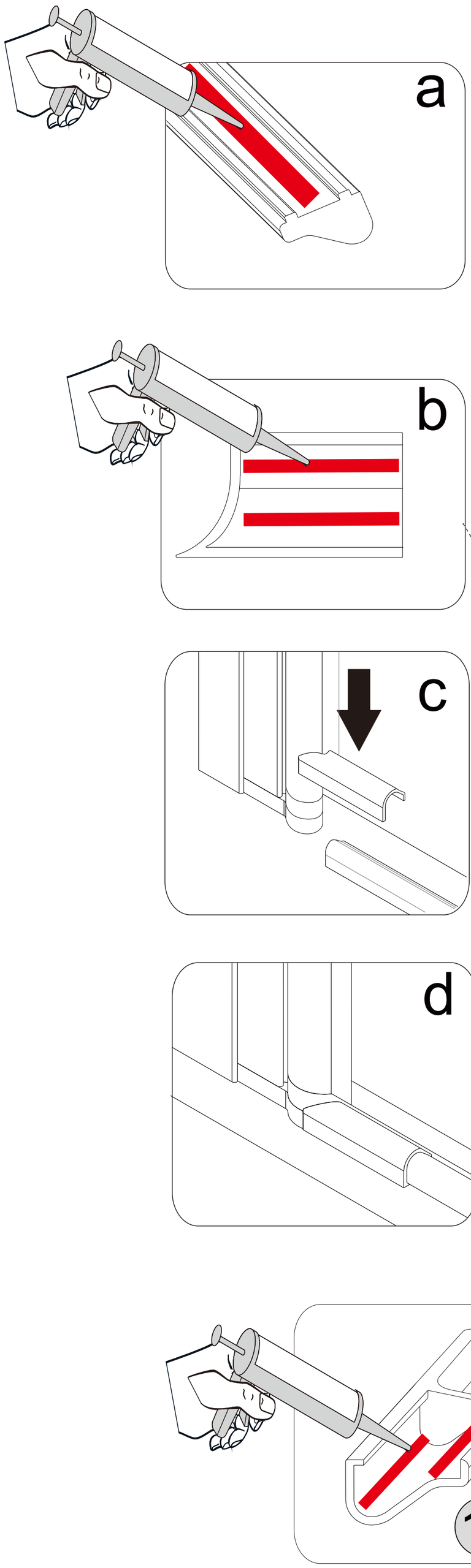

11 SEALING

NOTE

The surfaces need to be clean and free of debris before applying silicone.

NOTE

Ensure that the Shower door closes tightly and opens smoothly.
Apply a good quality silicone sealant along the wall
Jamb(3)**&**(9)**and** Water seal **(**16**) .**

Allow 24 hours for the silicone to cure before using the shower.

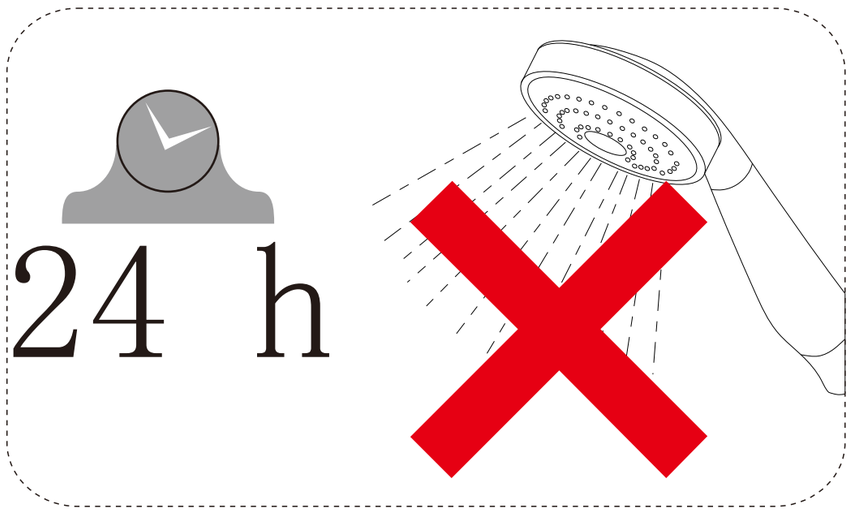

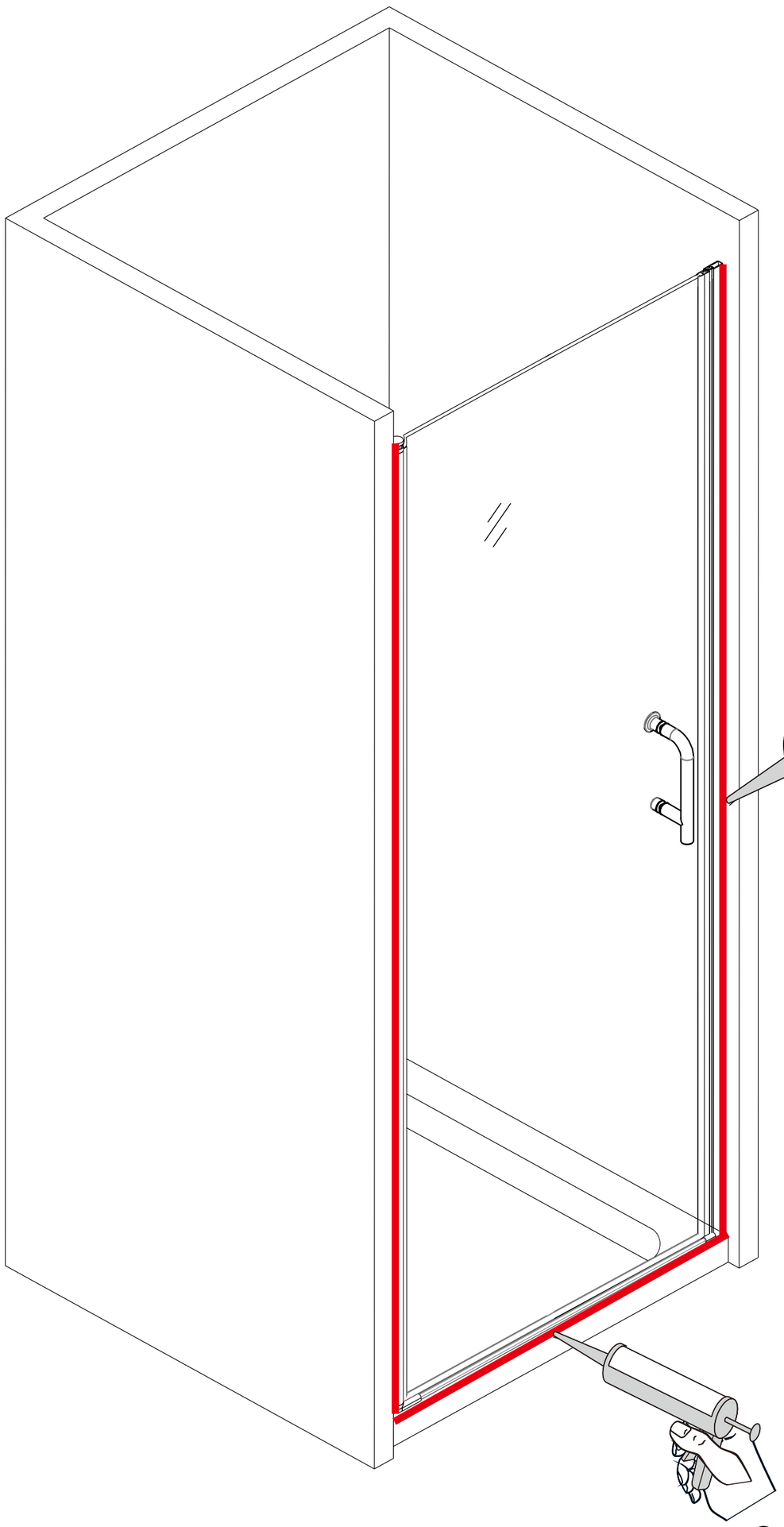

Apply Silicone Sealant,(not supplied).

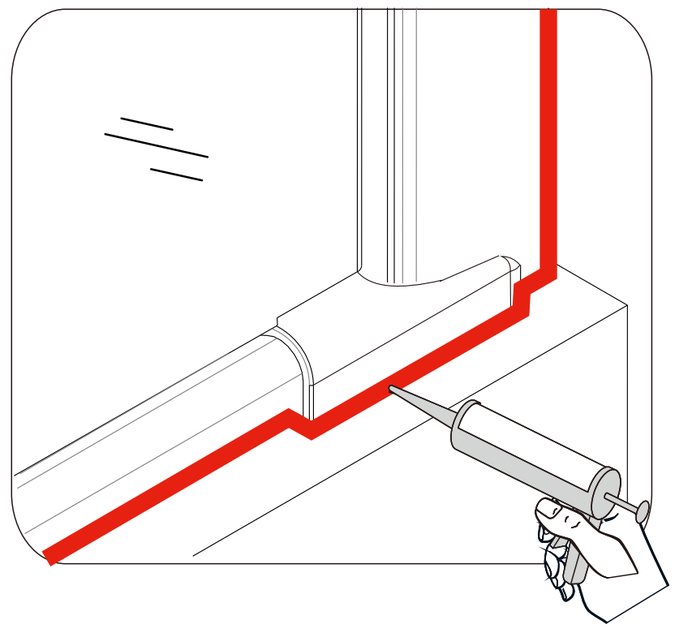

This troubleshooting guide is for general aid only. For service and installation issues or concerns, please contact us.

Please provide the belowing information and contact us.

1.oder number:
2.description of the issue:
3.who install it? installer or yourself?
4.some photos or video of the issue:
5.If you need replacement parts,please circle the part you need on the page 2, then send the photo to us.
6. your address and phone number (if you need something re-shiped) :
We will give you a solution as soon as possible.

Troubleshooting		
Problem/Symptom	Suggested Solution	Page(s)
Missing parts	*Check all shipping/packaging material for missing parts/components. *If not found, please contact us to order factory part replacement.	2.3
Door is not operaing smoothly	*Check the magentic seal (F)for proper trimming and installation. * Confirm the sweep seal (A) is tightly secured to the bottom of Door Glass	10-15
Water leakage	*Check all the pvc seals for proper trimming and installation. *Check the alu. threshold installed properly and secured with silicone.	16-18
Handle rattles during operation	*Confirm the pvc gaskets are present and the handle is tightly secured to the glass.	15

Customer service:
For more information about TOOLKISS® products please visit WWW.TOOLKISS.COM
+1(832)3768443
sales@toolkiss.com

Do not return product to the store.Contact TOOLKISS® directly with any questions.

25/03/19 Rev.1.0