Replacement Parts List

OSWELL 4 IN. CENTERSET SINGLE HANDLE BATHROOM FAUCET

Internet#	MODEL	SKU #	FINISH
333017955	HD67958W-6110H	1013054695	Matte Black

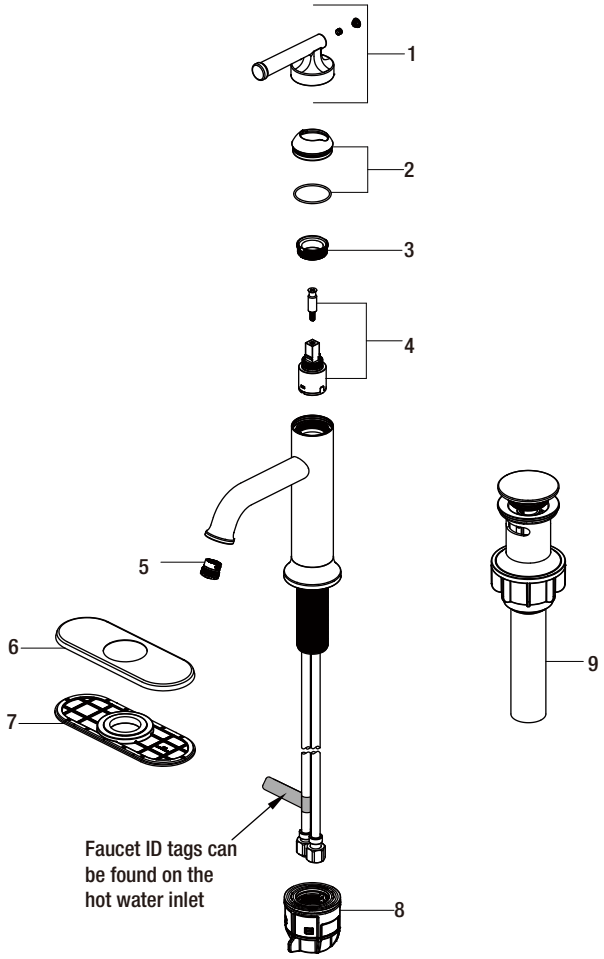

Many replacement parts can be purchased online or at your local store. Please use the table below to identify the part SKU number needed, go to HOMEDEPOT.COM, and check for online and store availability. If you can't find the part you are looking for, please call 1-855-HD-GLACIER.

Part	Description	Part #	Internet SKU #	Store SKU #
1	Handle assembly	RP1398610H		
2	Cap & O-ring	RP8076710H		
3	Bonnet nut	RP70924		
4	Cartridge & Screw	RP20055		
5	Aerator	RP30187		

Part	Description	Part #	Internet SKU #	Store SKU #
6	Deck plate	RP8061210H		
7	Gasket	RP80768		
8	Easy install nut	RP56167		
9	Press pop-up assembly	RP4026910H		