GLACIER BAY®

Item # 3ABRB
Model #s 3ABRB-37-001
3ABRB-38-001
3ABRB-39-001
3ABRB-52-001
3ABRB-56-001

USE AND CARE GUIDE

APRON-FRONT KITCHEN SINK

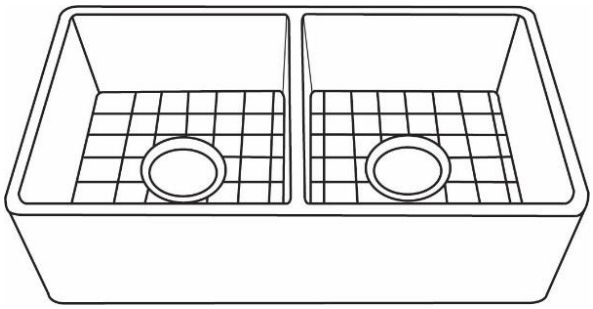

3ABRB-39-001

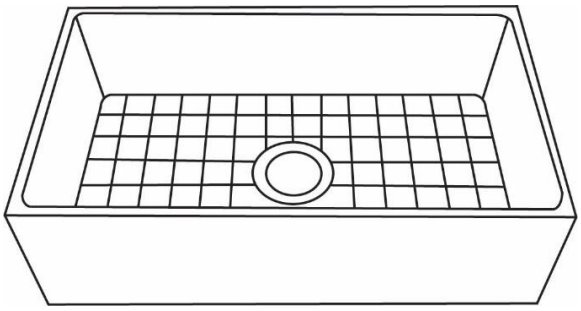

3ABRB-52-001

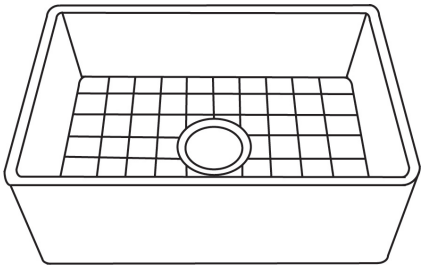

3ABRB-37-001

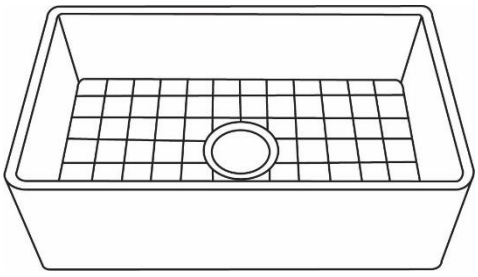

3ABRB-38-001

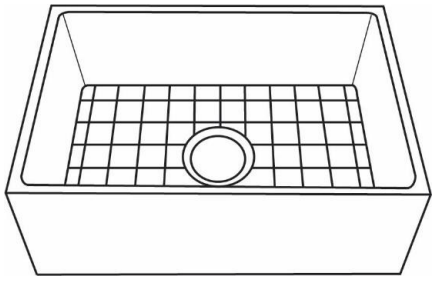

3ABRB-56-001

Questions, problems, missing parts? Before returning to the store,
call Glacier Bay Customer Service
8 a.m. – 7 p.m., EST, Monday-Friday, 9 a.m. – 6 p.m., EST, Saturday

1-855-HD-GLACIER

HOMEDEPOT.COM/GLACIERBAY

THANK YOU

We appreciate the trust and confidence you have placed in Glacier Bay through the purchase of this fireclay kitchen sink. We strive to continually create quality products designed to enhance your home. Visit us online to see our full line of products available for your home improvement needs. Thank you for choosing Glacier Bay!

Table of Contents

Table of Contents 2
Safety Information 2
Warranty 3
- What is Covered 3
- What is Not Covered 3

Pre-installation 4
- Planning Installation 4
- Tools Required 4
- Hardware Included 4
- Package Contents 5

Installation - Preparation 6
Installation - Process 6
Maintenance 8
Care and Cleaning 8

Safety Information

READ THESE INSTRUCTIONS CAREFULLY BEFORE YOU BEGIN INSTALLATION…

1. Observe all local plumbing and building codes.
2. Shut off the hot and cold-water supplies.
3. Inspect the drain and supply tubing. Replace if necessary.
4. Prior to installation, unpack the new sink and inspect it for damage. Return the sink to its protective carton until you are ready to install it.
5. It is very important that the proper materials are used with your sink. Proper selection of surrounding materials, such as tile and counters, is critical for a secure installation. Because of the variance in material thickness, your carpenter, tiler, and plumber maintain communication and discuss the requirements of the project.
6. To ensure a safe and damage-free installation, two people should install the sink.
7. Due to the variety of installations possible with this sink, you may need to use procedures other than those described. Please consult a professional prior to doing so.

NOTE: Cabinet and frame shown in these instructions are generic and may not represent the actual design or structure.

- □ Due to the nature of undercounter installations, Glacier Bay recommends that undercounter sink installations, this includes apron-front sinks, be performed by trained and experienced installers.

WARNING: Product can break, chip, cause injury or product damage if handled carelessly. Get help lifting the sink.

CAUTION: Risk of personal injury or product damage. Handle with care.

NOTE: Read these instructions carefully before you begin this installation. All information in these instructions is based on the latest product information available at the time of publication. Glacier Bay reserves the right to make revisions in the design of products without notice.

Warranty

LIFETIME LIMITED WARRANTY

WHAT IS COVERED

Glacier Bay warrants this fireclay kitchen sink manufactured after 2012, to be free of defects in material and workmanship during normal residential use for as long as the original consumer purchaser owns their home. This warranty applies to only Glacier Bay fireclay kitchen sinks installed in the United States of America, Canada, or Mexico (North America). If a defect is found in normal residential use, Glacier Bay will, at its election, repair, replace, or make appropriate adjustment. Proof of purchase (original sales receipt) must be provided to Glacier Bay with all warranty claims. Glacier Bay is not responsible for labor charges, installation, or other incidental or consequential costs. In no event shall the liability of Glacier Bay exceed the purchase price of the product.

If the fireclay kitchen sink is used commercially or is installed outside of North America, Glacier Bay warrants the fireclay kitchen sink to be free from defects in material and workmanship for one (1) year from the date the product is installed, with all other terms of this warranty applying except duration. All other components other than the fireclay component carry Glacier Bay's one-year limited warranty unless otherwise specified.

If you believe that you have a warranty claim, contact your Dealer, Plumbing Contractor, or Glacier Bay directly at 1-855-HD-GLACIER or visit www.HomeDepot.com/GlacierBay. Please be sure to provide all pertinent information regarding your claim, including a complete description of the problem, the product, model number, color, finish, and the date the product was purchased and from whom the product was purchased (i.e. online or in store). Also include your original invoice.

GLACIER BAY AND/OR SELLER ARE PROVIDING THIS WARRANTY IN LIEU OF ALL OTHER WARRANTIES, EXPRESSED OR IMPLIED, INCLUDING BUT NOT LIMITED TO THE IMPLIED WARRANTY OF MERCHANTABILITY AND FITNESS FOR A PARTICULAR PURPOSE. GLACIER BAY AND/OR SELLER DISCLAIMS ANY LIABILITY FOR SPECIAL, INCIDENTAL OR CONSEQUENTIAL DAMAGES.

Some states/provinces do not allow limitations on how long an implied warranty lasts or the exclusion or limitation of such damages, so these limitations and exclusions may not apply to you. This warranty gives the consumer specific legal rights. You may also have other rights that vary from state/province-to-state/province. This warranty is to the original consumer purchaser only, and excludes product damage due to installation error, product abuse, or product misuse, whether performed by a contractor, service company or the consumer.

This is Glacier Bay's exclusive written warranty.

WHAT IS NOT COVERED

Gloss reduction, scratching, staining and acid or alkaline etching of finish over time due to use, cleaning practices, or water, or atmospheric conditions, are not manufacturing defects but are indicative of normal wear and tear. Damage caused by accident, misuse, or abuse, such as dents and scratches after installation, is not covered by this warranty. Improper care and cleaning will void the warranty.

Contact the Customer Service Team at 1-855-HD-GLACIER or visit www.HomeDepot.com/GlacierBay.

Pre-installation

PLANNING INSTALLATION

Please prepare all tools and materials prior to beginning the installation process.

NOTE: Due to the uniqueness of the firing process during the manufacture of fireclay it is recommended that you use ONLY the sink being installed as a cutting template for the countertops.

TOOLS REQUIRED

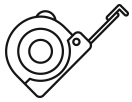
Tape measure


Safety goggles


Sealant

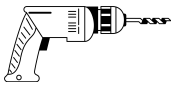
Drill


Pencil

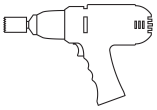
Hole Saw 1-3/8 in.


Support frame members


½ in. or larger drill bit

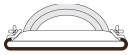
Sanding block

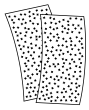
Assorted sandpaper

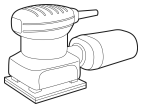
Orbital sander (optional)

HARDWARE INCLUDED

NOTE: Due the method of installation, hardware is not included with this fireclay sink.

Pre-installation (continued)

PACKAGE CONTENTS

NOTE: The sink pictured may vary in size and bowl style from your model. Refer to the chart below for specific details on your specific sink model.

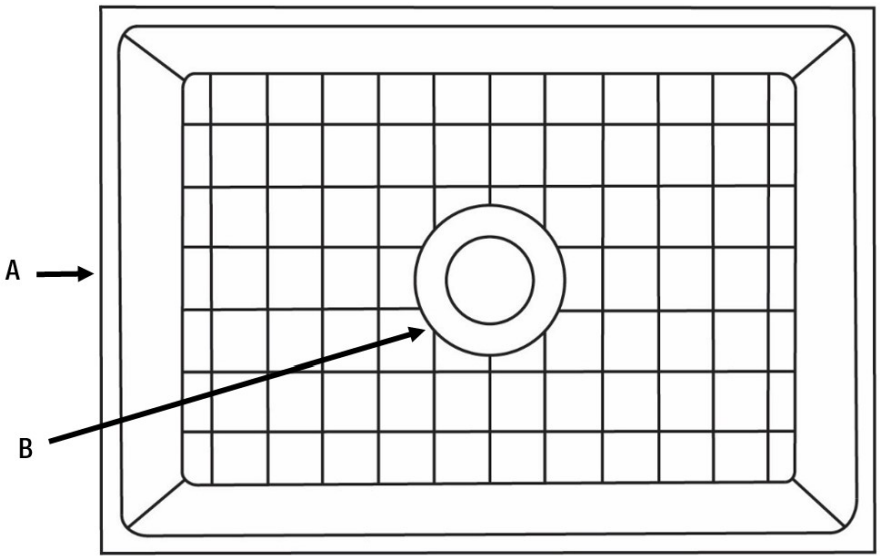

3ABRB-37-001 = 24 inch single bowl

Part	Description	Quantity
A	Fireclay Kitchen Sink	1
B	Stainless Steel Grid	1

3ABRB-38-001 = 30 inch single bowl

Part	Description	Quantity
A	Fireclay Kitchen Sink	1
B	Stainless Steel Grid	1

3ABRB-39-001 = 33 inch double bowl

Part	Description	Quantity
A	Fireclay Kitchen Sink	1
B	Stainless Steel Grid	2

3ABRB-52-001 = 33 inch single bowl

Part	Description	Quantity
A	Fireclay Kitchen Sink	1
B	Stainless Steel Grid	1

3ABRB-56-001 = 27 inch single bowl

Part	Description	Quantity
A	Fireclay Kitchen Sink	1
B	Stainless Steel Grid	1

Installation

1 Preparation

Undercounter Installation:

- □ Check to see if the faucet can be completely assembled to the countertop and the sink.
- □ Determine this by taking the countertop thickness, plus the sink rim thickness, 5/8 in. (1.6 cm) plus or minus 1/32 in. (1 mm), and comparing that measurement to the available shank length between the base of the faucet assembly and the mounting nut. If the available shank length is the same or longer than needed, proceed. If not, select a thinner countertop or another faucet.

2 Cabinet/Support Frame Construction

- □ Measure the size of the sink, including the apron (the top of the apron is approximately ¼ in. (6 mm) wider than the top). The cabinet opening should equal the maximum sink/apron dimensions to ensure a minimum gap between the sink and the cabinet.
- □ Determine if the sink will be flush with, or extend slightly beyond the front of the cabinet. The sink may extend no more than 1-1/4 in. (3.2 cm) beyond the face of the cabinet.
- □ Construct a wood support frame to fit inside the cabinet opening. Allow adequate clearance for the water supply lines between the support and the finished wall.
- □ Locate and cut out the drain outlet clearance hole in the support. The hole diameter must clear the garbage disposal mounting system, if used.

NOTE: If the sink is not available at the time of installation, make allowances to add wood filler strips or spacers to the cabinet opening after the frame and before the sink is installed.

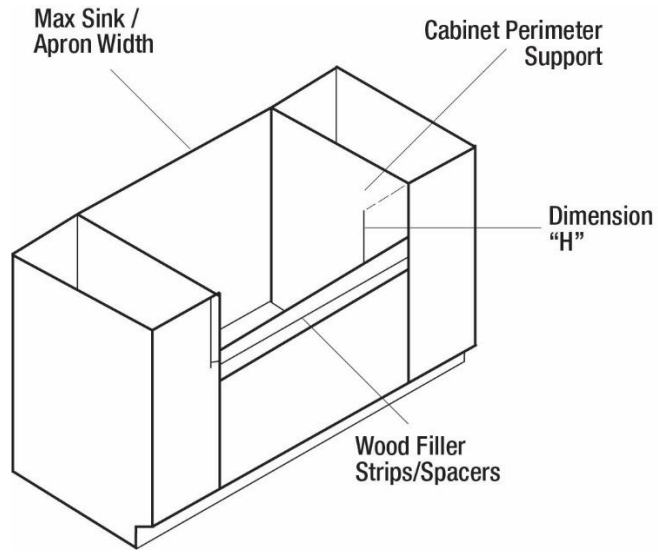

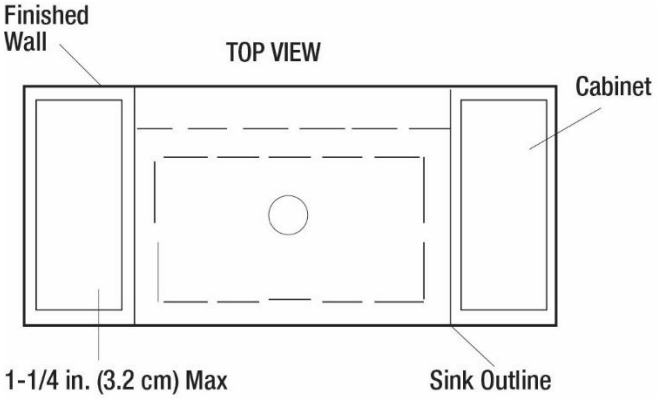

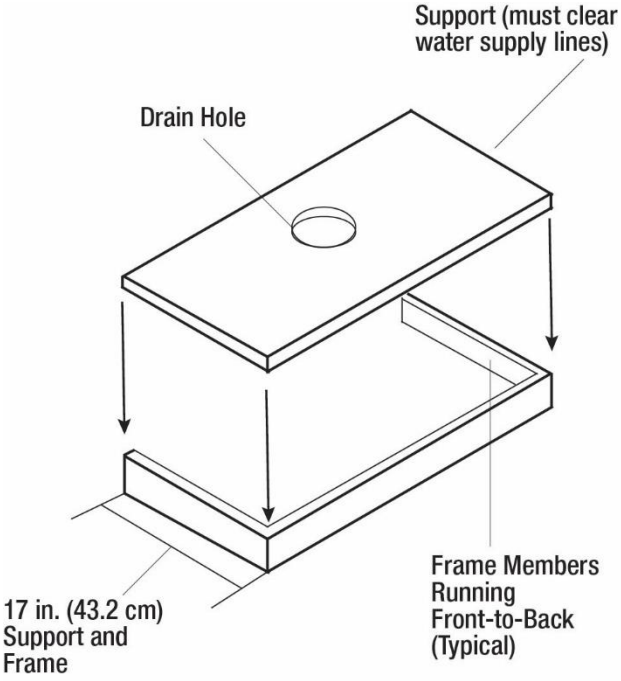
Support (must clear water supply lines)
Drain Hole
Frame Members Running Front-to-Back (Typical)
17 in. (43.2 cm) Support and Frame

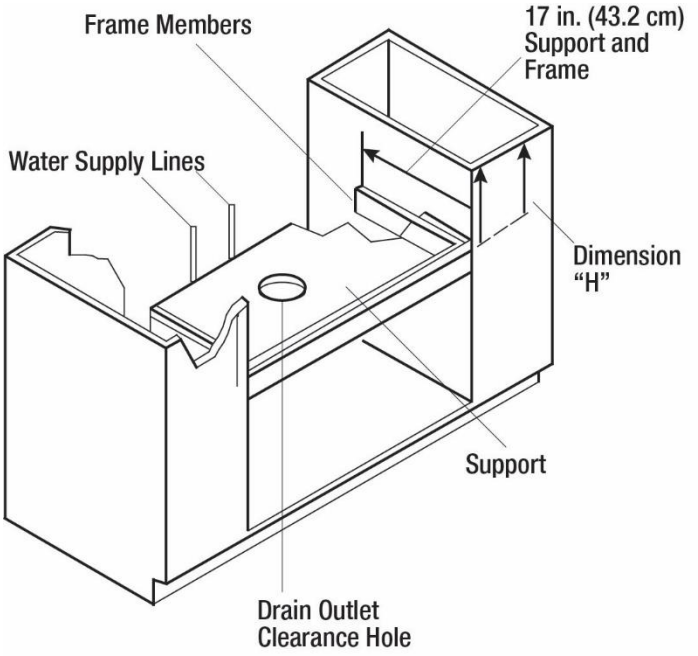
Frame Members
17 in. (43.2 cm) Support and Frame
Water Supply Lines
Dimension "H"
Support
Drain Outlet Clearance Hole

3 Support Frame Installation

Undercounter and Solid Surface Installations:

- □ Position the support frame in the cabinet opening so when installed, the top of the sink will be level and flush with the top of the cabinet (Dimension H).

All installations:

- □ Secure the support frame to the cabinet. Position the securing hardware to allow for easy removal should the sink need to be removed or replaced.

CAUTION: Ensure that the securing hardware will not penetrate through the cabinet walls.

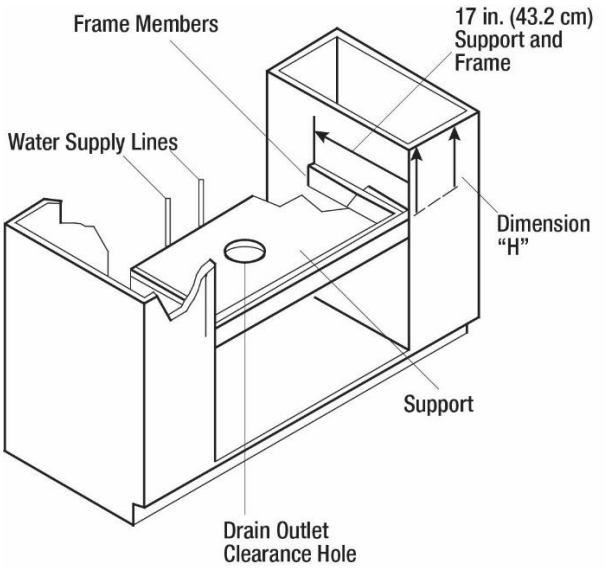

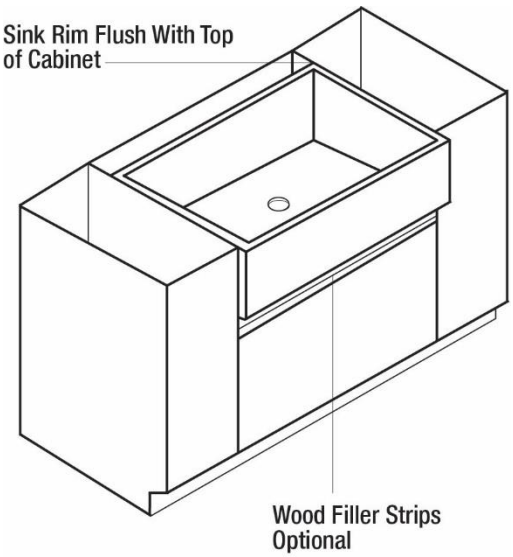

4 Undercounter/Solid Surface Preparation

CAUTION: Risk of personal injury or product damage. Large sinks are very heavy. Get help lifting the sink into place.

NOTE: Instructions in this section are for both undercounter and solid surface installation. Any differences are noted in the text.

NOTE: If using shims additional sealant will be needed.

- □ Use shims to level the sink if needed.
- □ Verify that the sink will fit in the cabinet opening. If necessary, adjust the opening by sanding the opening, or adding wood-filler strips.
- □ For solid surface installation, install the faucet to the sink according to the manufacturer's instructions. Install the strainer or garbage disposal to the sink according to the manufacturer's instructions.
- □ Apply a 1 in. (2.5 cm) spot of sealant at each corner of the frame where it will contact the sink.
- □ Carefully position the sink within the frame, making sure to center the sink in the cabinet.
- □ OPTIONAL: Apply sealant between the cabinet and the apron.
- □ Verify that the sink is level. The top of the sink should be flush with the top of the cabinet to allow proper countertop installation. Adjust or shim between the sink and support if needed.
- □ Due to the various cutout sizes possible, a template is not supplied.
- □ Carefully measure the countertop to determine the exact location of the cutout.
- □ Carefully mark the cutout location on the countertop.

Maintenance

- Proper care and cleaning of your new fireclay kitchen sink will keep it looking its best for years to come. Please follow these care and cleaning guides to ensure best results.

Care and Cleaning

- Always test your cleaning products on an inconspicuous area *before* applying them to the entire surface.
- Wipe all surfaces clean and rinse completely with water immediately after applying cleaning solutions to avoid any unintended damage. Rinse off and dry any spray that lands on surrounding surfaces. Do not allow cleaners to soak or sit on surfaces.
- Use a soft, dampened sponge or cloth for cleaning. Never use an abrasive material like brushes or scouring pads to clean surfaces to avoid scratching.
- Rinse the sink thoroughly and wipe it dry with a soft cloth after each use to maintain top quality.
- When necessary, soft abrasive cleaners may be used for a deeper clean of your fireclay sink. Keep in mind, strong abrasive cleaners will scratch and dull the surface and should not be used.
- Do not store open containers of cleaners or chemicals such as acids, bleach, sodium chloride, lye, toilet bowl cleaner, or hard water stain removal products under your sink.



NOTE: Success with cleaners and procedures can be affected by water hardness and temperature, usage amounts, ingredient changes and conditions of the product being cleaned. As a result of these factors, Glacier Bay cannot guarantee the effectiveness of the recommendations made in this guide.

- For general cleaning of your fireclay sink:
    - Fantastik Antibacterial
    - Heavy Duty Formula 409
    - Antibacterial AllPurpose
    - Green Works All-Purpose
    - Soft Scrub Gel with Bleach
    - Soft Scrub Lemon Cleanser
- To remove Rust Build-up on your fireclay sink:
    - Bar Keepers Friend
    - Super Iron Out Rust Stain Remover
- For care of Chrome and other Finish Metal Surfaces (such as the grid), do not use cleaners containing ammonia, bleach or acid. Rinse thoroughly and use a soft cloth to wipe the product dry after each use.
- Finishes always look their best when any water is blotted dry from the surface. Allowing it to air dry may leave water deposits and spots. Always use a dabbing method to dry the surface, and never an abrasive, or rubbing action to avoid scratching on grids in particular. We recommend using a damp sponge or gentle cleaning cloth.
- Products to consider for general cleaning of your grid:
    - Fantastik Antibacterial
    - Green Works All-Purpose
    - Green Works Glass Cleaner
    - Windex Original



Questions, problems, missing parts? Before returning to the store,
call Glacier Bay Customer Service
8 a.m. – 7 p.m., EST, Monday-Friday, 9 a.m. – 6 p.m., EST, Saturday

1-855-HD-GLACIER

HOMEDEPOT.COM/GLACIERBAY

Retain this manual for future use.