HOME DECORATORS COLLECTION®

SKU: #1001 236 066
Model: #SW1422 MBK

USE AND CARE GUIDE

MERWRY LED 52 INCH CEILING FAN

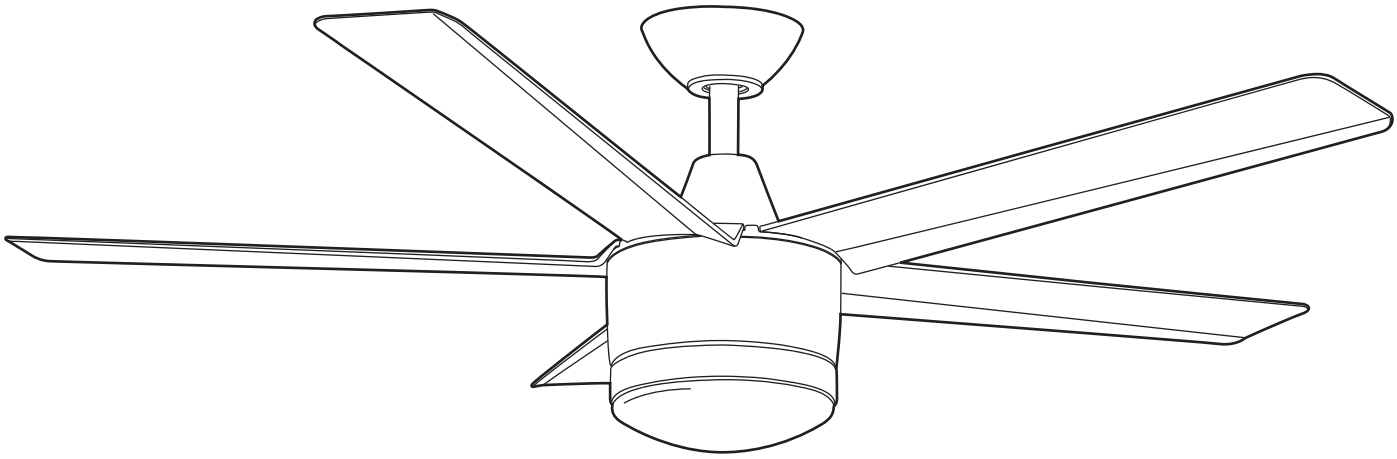

EASY STEP-BY-STEP 3D INSTRUCTIONS

Download the Free Interactive App

BILT®

Download on the App Store

GET IT ON Google Play

Questions, problems, missing parts? Before returning to the store,
call Home Decorators Collection Customer Service
8 a.m. - 7 p.m., EST, Monday-Friday,
9 a.m. - 6 p.m., EST, Saturday

1-800-986 3460

HOMEDEPOT.COM/HOMEDECORATORS

THANK YOU

We appreciate the trust and confidence you have placed in Home Decorators Collection through the purchase of this ceiling fan. We strive to continually create quality products designed to enhance your home. Visit us online to see our full line of products available for your home improvement needs. Thank you for choosing Home Decorators Collection!

Table of Contents

Table of Contents 2

Safety Information 3

Warranty 4

Pre-installation 4

- Specifications 4
- Tools Required 4
- Hardware Included 5
- Package Contents 6

Installation 7

Assembly 8

- Attaching the Fan Blades 8
- Hanging the Fan 8
- Installing the light kit plate 12
- Installing the LED assembly and glass shade 13

Operation 14

Care and Cleaning 15

Troubleshooting 16

Service Parts 17

Safety Information

READ AND SAVE THESE INSTRUCTIONS.

- To reduce the risk of electric shock, ensure electricity has been turned off at the circuit breaker or fuse box before beginning.
- All wiring must be in accordance with the National Electrical Code “ANSI/NFPA 70-1999” and local electrical codes. Electrical installation should be performed by a qualified licensed electrician.
- The outlet box and support structure must be securely mounted and capable of reliably supporting a minimum of 35 lbs. Use only UL Listed outlet boxes marked “FOR FAN SUPPORT.”
- The fan must be mounted with a minimum of 7 ft. clearance from the trailing edge of the blades to the floor.
- To avoid personal injury or damage to the fan and other items, be cautious when working around or cleaning the fan.
- Do not use water or detergents when cleaning the fan or fan blades. A dry dust cloth or lightly dampened cloth will be suitable for most cleaning.
- After making electrical connections, spliced conductors should be turned upward and pushed carefully up into the outlet box. The wires should be spread apart with the grounded conductor and the equipment-grounding conductor on one side of the outlet box and ungrounded conductor on the other side of the outlet box.
- All setscrews must be checked and retightened where necessary before installation.
- This device complies with Part 15 of the FCC Rules. Operation is subject to the following two conditions:
  (1) This device may not cause harmful interference, and (2) This device must accept any interference received, including interference that may cause undesired operation.

WARNING: To reduce the risk of fire or electric shock, this fan should only be used with fan speed control part No.:DL-1167RYS-02, manufactured by S.Q.M Co Ltd.

WARNING: To reduce the risk of personal injury, do not bend the blade arms (also referred to as flanges), when installing the brackets, balancing the blades, or cleaning the fan.

WARNING: Do not insert foreign objects between rotating fan blades.

WARNING: To reduce the risk of fire, electric shock, or personal injury, mount the fan to the outlet box marked acceptable for fan support with the screws provided with the outlet box.

CAUTION: To reduce the risk of personal injury, use only the screws provided with the outlet box.

WARNING: Changes or modifications to this unit not expressly approved by the party responsible for compliance could void the user’s authority to operate the equipment.

NOTE: This equipment has been tested and found to comply with the limits for a Class B digital device, pursuant to Part 15 of the FCC Rules. These limits are designed to provide reasonable protection against harmful interference in a residential installation. This equipment generates, uses and can radiate radio frequency energy and, if not installed and used in accordance with the instructions, may cause harmful interference to radio communications.
However, there is no guarantee that interference will not occur in a particular installation. If this equipment does cause harmful interference to radio or television reception, which can be determined by turning the equipment off and on, the user is encouraged to try to correct the interference by one or more of the following measures: Reorient or relocate the receiving antenna. Increase the separation between the equipment and receiver. Connect the equipment into an outlet on a circuit different from that to which the receiver is connected. Consult the dealer or an experienced radio/TV technician for help.

Warranty

We warrant the fan motor to be free from defects in workmanship and material present at time of shipment from the factory for a period of lifetime after the date of purchase by the original purchaser. And we warrant the LED light kit to be free from defects in workmanship and material present at time of shipment from the factory for a period of 5 years after the date of purchase by the original purchaser. We also warrant that all other fan parts, excluding any glass or acrylic blades, to be free from defects in workmanship and material at the time of shipment from the factory for a period of 2 years after the date of purchase by the original purchaser. We agree to correct such defects without charge or at our option replace with a comparable or superior model if the product is returned. To obtain warranty service, you must present a copy of the receipt as proof of purchase. All costs of removing and reinstalling the product are your responsibility. Damage to any part such as by accident, misuse, improper installation or by affixing any accessories, is not covered by this warranty. Because of varying climatic conditions this warranty does not cover any changes in brass finish, including rusting, pitting, corroding, tarnishing or peeling. Brass finishes of this type give their longest useful life when protected from varying weather conditions. A certain amount of "wobble" is normal and should not be considered a defect. Servicing performed by unauthorized persons shall render the warranty invalid. There is no other express warranty. We hereby disclaim any and all warranties, including but not limited to those of merchantability and fitness for a particular purpose to the extent permitted by law. The duration of any implied warranty which cannot be disclaimed is limited to the time period as specified in the express warranty. Some states do not allow limitation on how long an implied warranty lasts, so the above limitation may not apply to you. The retailer shall not be liable for incidental, consequential, or special damages arising out of or in connection with product use or performance except as may otherwise be accorded by law. Some states do not allow the exclusion of incidental or consequential damages, so the above exclusion or limitation may not apply to you. This warranty givesd specific legal rights, and you may also have other rights which vary from state to state. This warranty supersedes all prior warranties. Shipping costs for any return of product as part of a claim on the warranty must be paid by the customer.

Contact the Customer Service Team at 1-800-986-3460 or visit www.HOMEDEPOT.COM/HOMEDECORATORS

Pre-Installation

SPECIFICATIONS

Fan size	Speed	Volts	Amps	Watts	RPM	CFM	N.W.	G.W.	C.F.
52 in. (1,32 m)	Low	120	0.23	15.03	94	2325	7.19 kg (15.82 lb)	8.33 kg (18.33lb)	1.52'
	Medium		0.32	27.95	136	3540			
	High		0.43	52.36	176	4961			

NOTE: These are approximate measures. They do not include amps and wattage used by the light kit.

Intertek

TOOLS REQUIRED

Phillips screwdriver

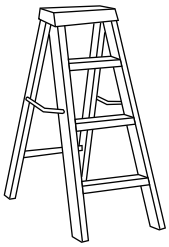

Ladder

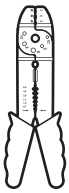

Wire stripper

Electrical tape

HARDWARE INCLUDED

NOTE: Hardware shown to actual size unless noted otherwise in the table below.

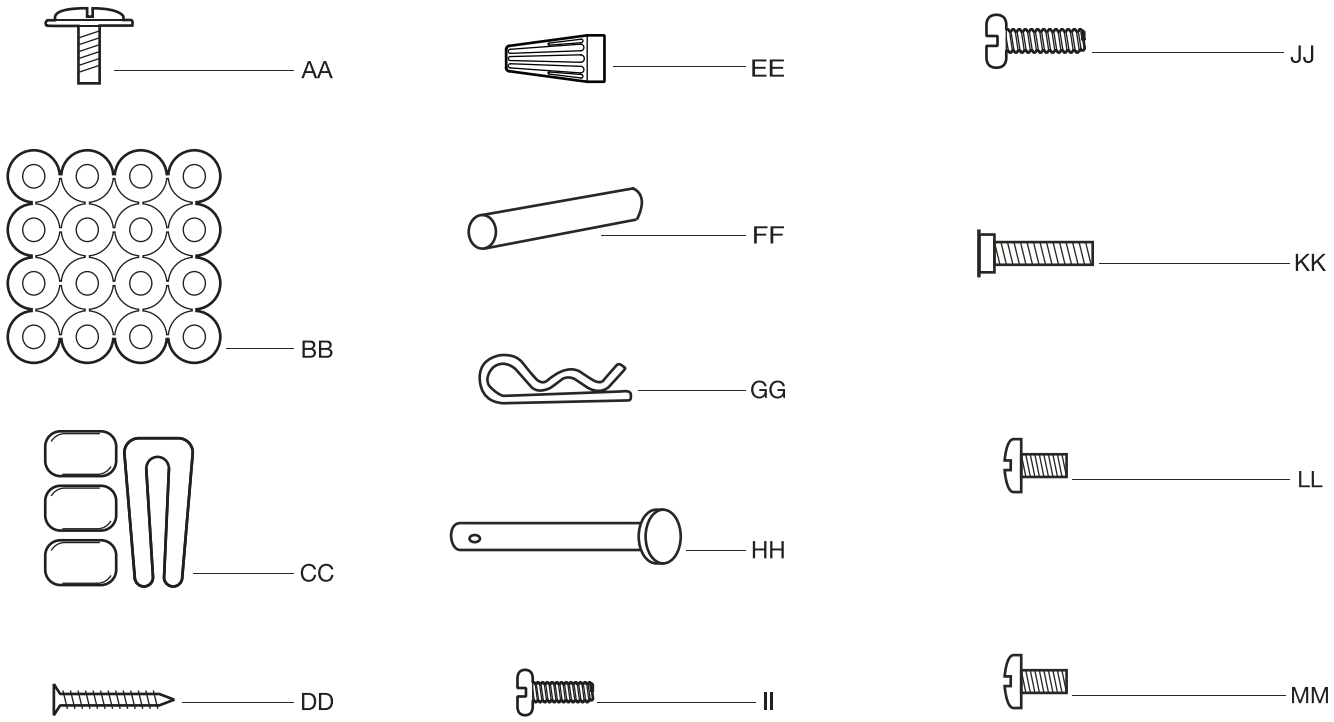

Part	Description	Quantity
AA	Blade screw	15 + 1 spare
BB	Fiber washer (not to scale)	15 + 1 spare
CC	Balance kit (not to scale)	1
DD	Remote control holder mounting screws	2
EE	Wire nuts	3
FF	Cross pin (not to scale) (preassembled with hanger ball and downrod)	1
GG	Hitch pin (preassembled in downrod)	1
HH	Lock pin (not to scale) (preassembled in downrod)	1
II	Hanger ball set screw (preassembled)	1
JJ	Fan motor assembly coupling set screw (preassembled)	2
KK	Mounting bracket screw (preassembled)	2
LL	Fan motor assembly mounting ring screw (preassembled)	3
MM	Light kit plate screw (preassembled)	3

PACKAGE CONTENTS

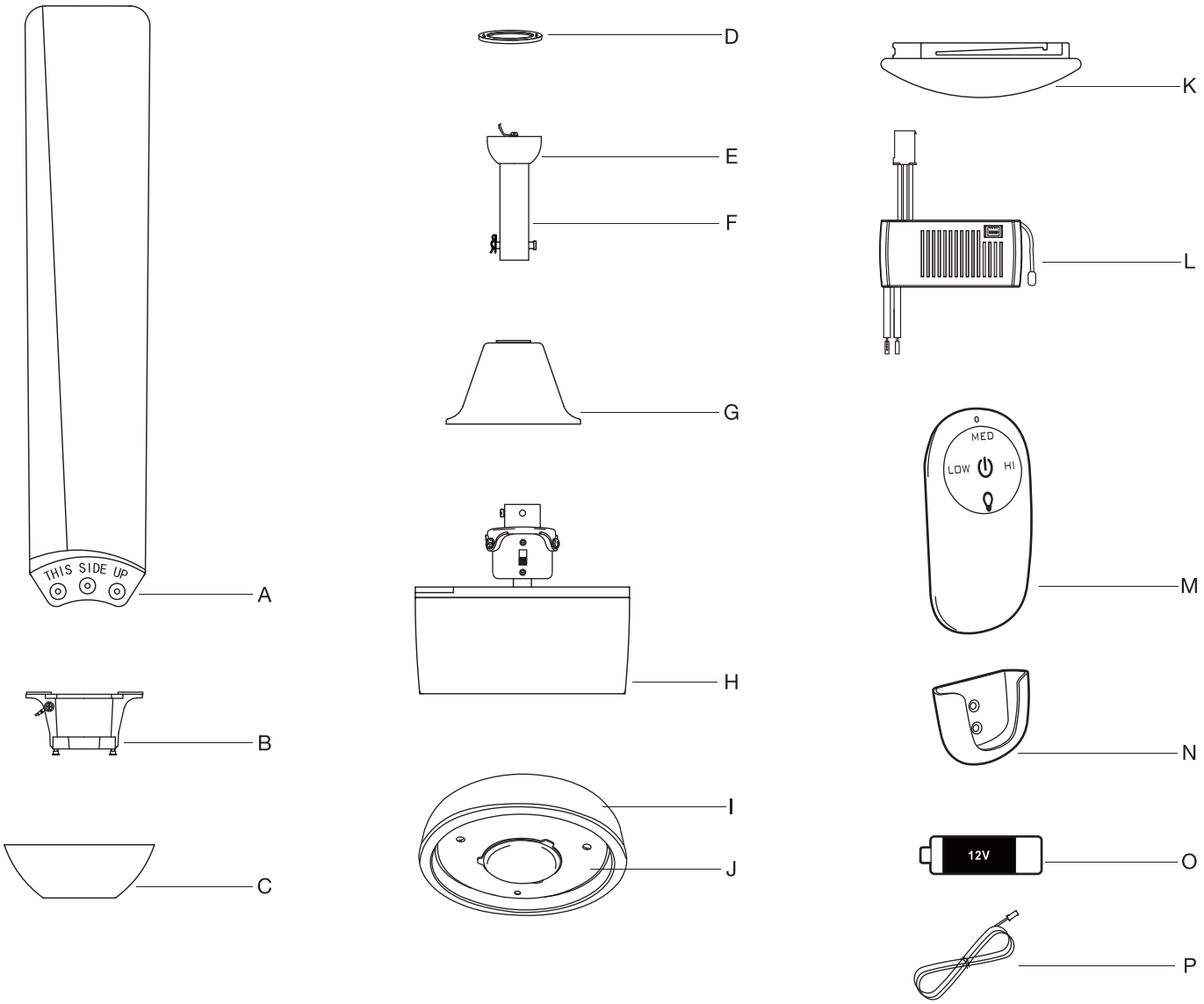

Part	Description	Quantity
A	Blade	5
B	Mounting bracket	1
C	Canopy	1
D	Canopy cover	1
E	Hanger ball (preassembled)	1
F	Downrod (preassembled)	1
G	Couping cover	1
H	Fan motor assembly	1

Part	Description	Quantity
I	Light kit plate (preassembled)	1
J	17W LED assembly (preassembled)	1
K	Glass shade	1
L	Receiver	1
M	Remote control	1
N	Remote control holder	1
O	12V Battery	1
P	Extension power cord used for longer downrod (longer downrod not included)	1

MOUNTING OPTIONS

WARNING: To reduce the risk of fire, electric shock, or personal injury, mount the fan to an outlet box marked acceptable for fan support using the screws provided with the outlet box. An outlet box commonly used for the support of lighting fixtures may not be acceptable for fan support and may need to be replaced. If in doubt, consult a qualified electrician.

If your ceiling fan does not have an existing UL-listed mounting box, then install one using the following instructions:

- ☐ Disconnect power by removing the 'FUSE' or turning OFF the breaker depending on the type of Electrical panel in your home
- ☐ Secure the outlet box (1) (not included) directly to the ceiling joist. Use appropriate fasteners and materials (not included). The outlet box and its bracing must be able to fully support the weight of the moving fan (at least 35 lbs.). Do not use a plastic outlet box.
- ☐ The illustrations to the right show three different ways to mount the outlet box (not included).
- ☐ To hang your fan where there is an existing fixture but no ceiling joist, you may need an installation hanger bar (3) (not included), as shown.

NOTE: You may need a longer downrod to maintain proper blade clearance when installing on a steep, sloped ceiling. The maximum angle allowable is 18°. If the canopy touches the downrod, remove the decorative canopy bottom cover and turn the canopy 180° before attaching the canopy to the mounting plate (2).

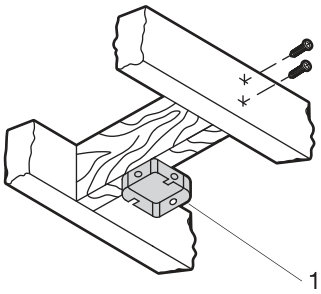

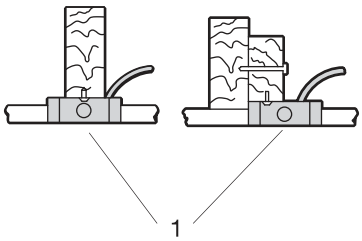

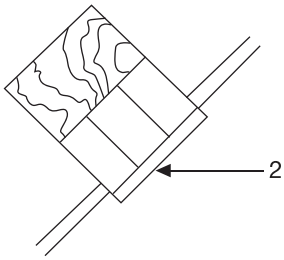

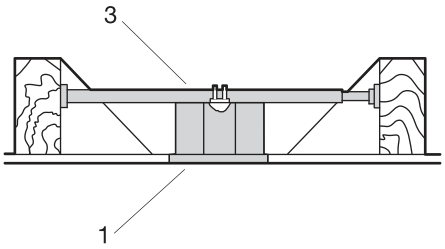

Assembly — Attaching the Fan Blade

1 Attaching the fan blade to the fan assembly

- ☐ Attach the five fan blades (A) to the fan motor assembly (H) using the blade screws (AA) and fiber washers (BB), three for each blade. Tighten all screws securely.

NOTE: When installing the blades, ensure the sides with "THIS SIDE UP" face the ceiling.

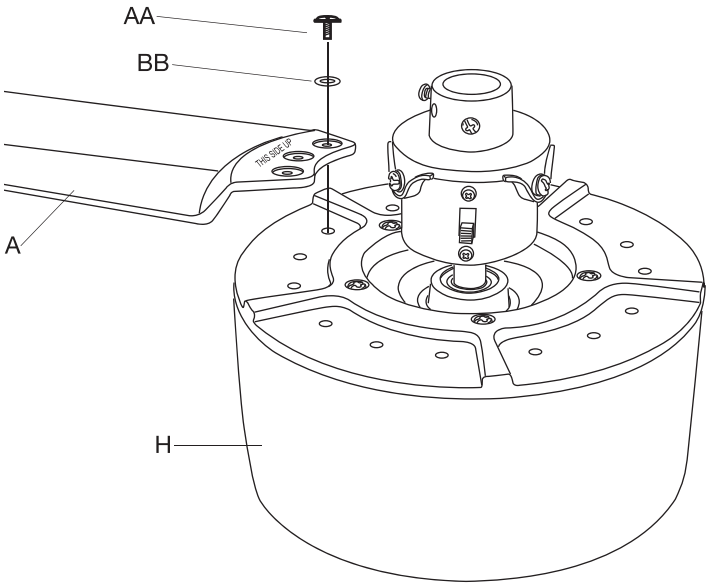

Assembly — Hanging the Fan

2 Attaching the mounting bracket to the electrical box

WARNING: To reduce the risk of fire, electric shock, or other personal injury, mount the fan only to an outlet box or supporting system marked acceptable for fan support, and use the mounting screws provided with the outlet box.

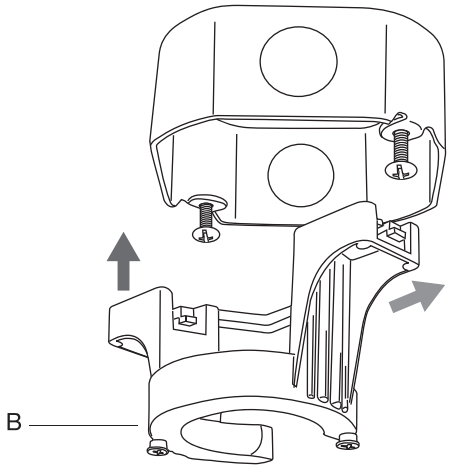

- ☐ Place the slots (NN) from the mounting bracket (B) over the two mounting screws provided with the outlet box.
- ☐ Slide the mounting bracket (B) until it locks in place at the narrow section of the slots (NN).
- ☐ Securely tighten the two mounting screws provided with the outlet box.

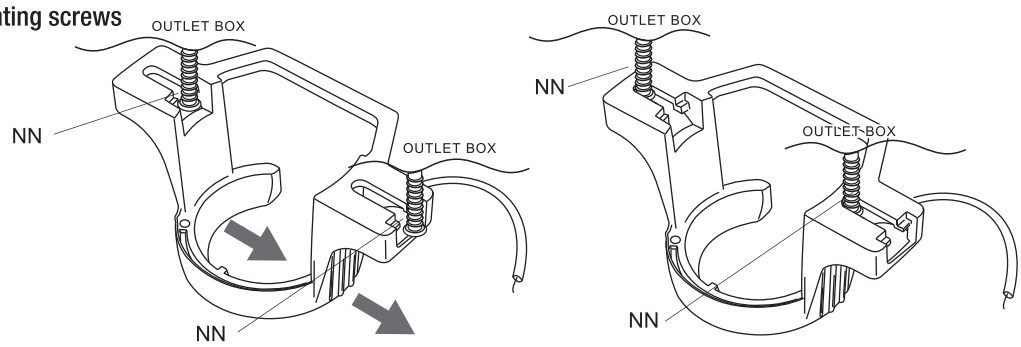

3 Attaching the downrod to the fan motor assembly

- ☐ Remove the hitch pin (GG) and lock pin (HH) from the downrod (F). Then, remove the hanger ball (E) from the downrod (F) by loosening the hanger ball set screw (II), and removing the cross pin (FF), then sliding the hanger ball (E) off of the downrod (F).
- ☐ Loosen the two set screws (JJ) from the fan motor assembly (H) coupling.
- ☐ Carefully feed the fan wires up through the downrod (F). Thread the downrod (F) into the fan motor assembly (H) coupling. Line up the holes and replace the lock pin (HH) and the hitch pin (GG). Retighten the set screws (JJ).

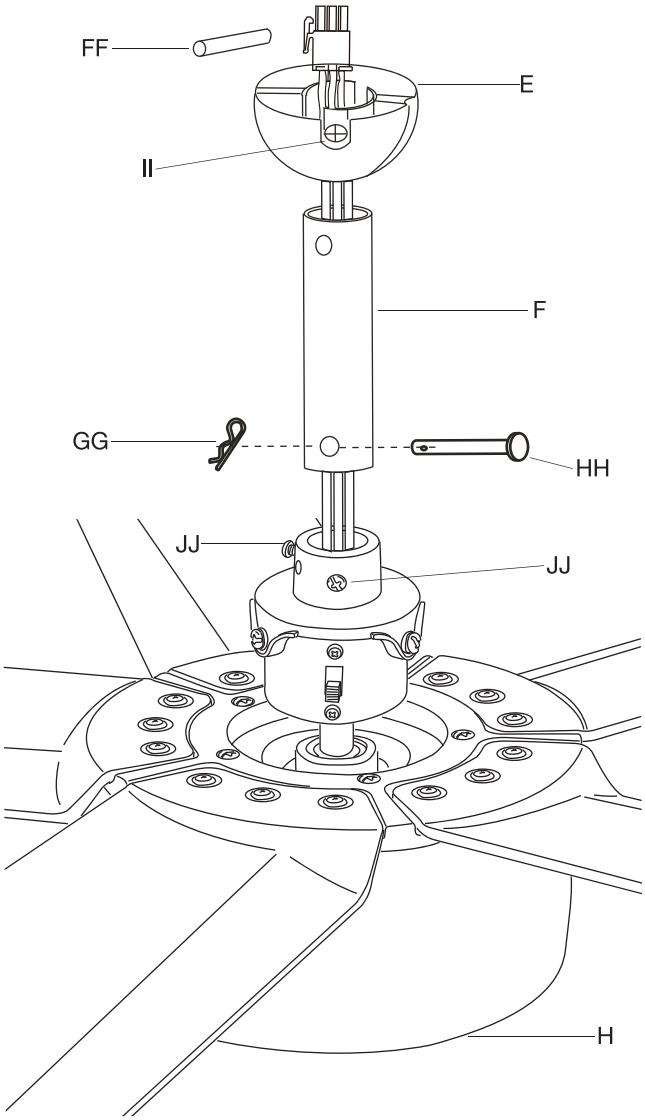

4 Attaching the coupling cover, canopy cover, and canopy to the downrod

- ☐ Slip the coupling cover (G), canopy cover (D), and canopy (C) onto the downrod (F).
- ☐ Carefully reinstall the hanger ball (E) onto the downrod (F), and ensure that the cross pin (FF) is in the correct position, the set screws (II) are tight, and the wires are not twisted.

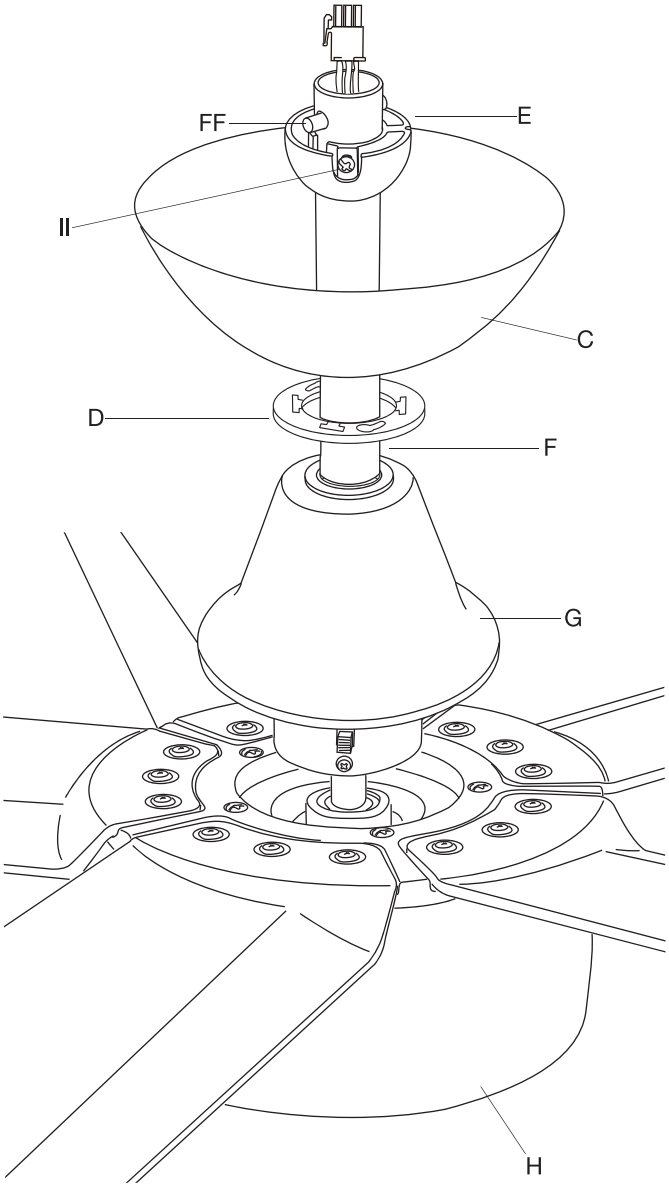

5 Hanging the fan motor assembly to the mounting bracket

- ☐ Remove one screw (KK) from the mounting bracket (B) but DO NOT discard it because it will be used again in coming step. Loosen the other screw (KK) approximately 1/4 turn.
- ☐ Lift the fan motor assembly (H) into position, and place the hanger ball (E) into the mounting bracket (B). Rotate the downrod (F) until the check groove (00) drops into the registration slot (PP) and seats firmly. The downrod (F) should not rotate if this is done correctly.

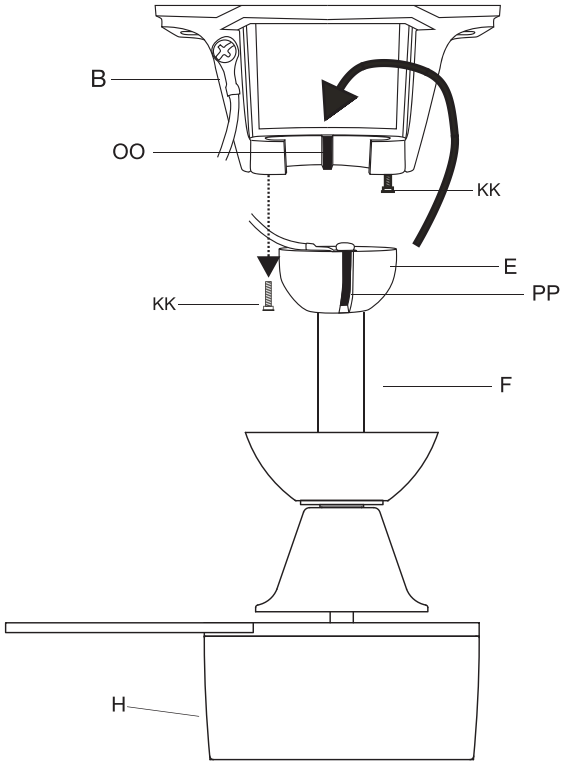

6 Preparing the receiver and remote control

WARNING: To avoid possible electrical shock, ensure the electricity is turned off at the main fuse box before wiring.

CAUTION: Do not use with a wall light dimmer switch.

CAUTION: Do not cut the antenna wire (QQ) of receiver.

NOTE: If you feel you do not have enough electrical wiring knowledge or experience, have your fan installed by a licensed electrician.

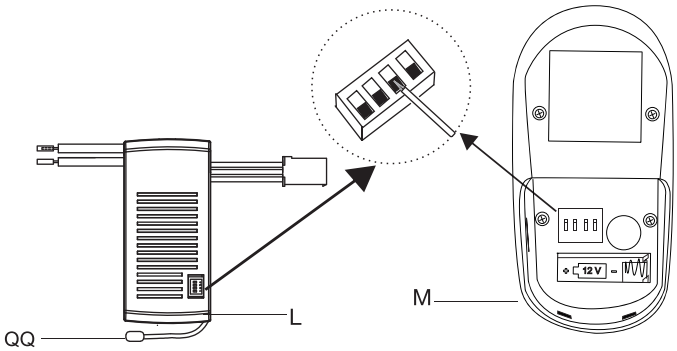

This remote control unit is equipped with 16 code combinations to prevent possible interference from or to other remote units. The frequency switches on your receiver (L) and remote control (M) have been preset at the factory. Please recheck to make sure the switches on the remote control (M) and the receiver (L) are set to the same position. Any combination of settings will operate the fan as long as the remote control (M) and receiver (L) are set to the same position.

- ☐ Insert the receiver (L) into the mounting bracket (B) with the flat side of the receiver (L) facing the ceiling.

NOTE: Wires coming from the downrod and the wires coming from the power source need to be positioned on the same side when inserting the receiver through the mounting bracket.

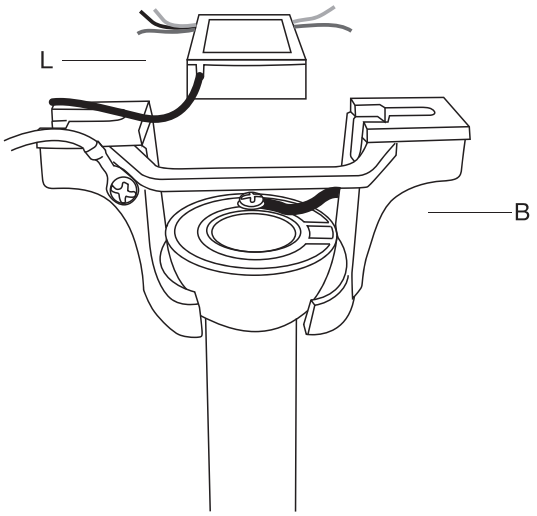

7 Making the electrical connections

WARNING: To avoid possible electrical shock, ensure the electricity is turned off at the circuit breaker or main fuse box before wiring.

WARNING: Check to see that all connections are tight, including the ground, and that no bare wire is visible at the wire nuts, except for the ground wire.

Follow the steps below to connect the fan to your house supply wires. Secure the wire nuts (EE) supplied with your fan by wrapping the connections with electrical tape.

Motor to receiver electrical connections:

- ☐ Connect the male connector from the motor to the female connector from the receiver (L).

Receiver to house supply wires electrical connections:

- ☐ Connect the black (hot) wire from the ceiling to the black wire marked "AC in L" from the receiver (L).
- ☐ Connect the white (neutral) wire from the ceiling to the white wire marked "AC in N" from the receiver (L).
- ☐ Connect the ground wire (green or bare copper) from the outlet box (1) to the ground wire of the hanging ball (E) and the ground wire of mounting bracket (B).
- ☐ Secure the wire connection with a plastic wire nut (EE) provided with the electrical hardware.
- ☐ After connecting the wires, spread them apart so that the green and white wires are on one side of the outlet box (1) and the black wires are on the other side. Carefully tuck the wire connections up into the outlet box (1).

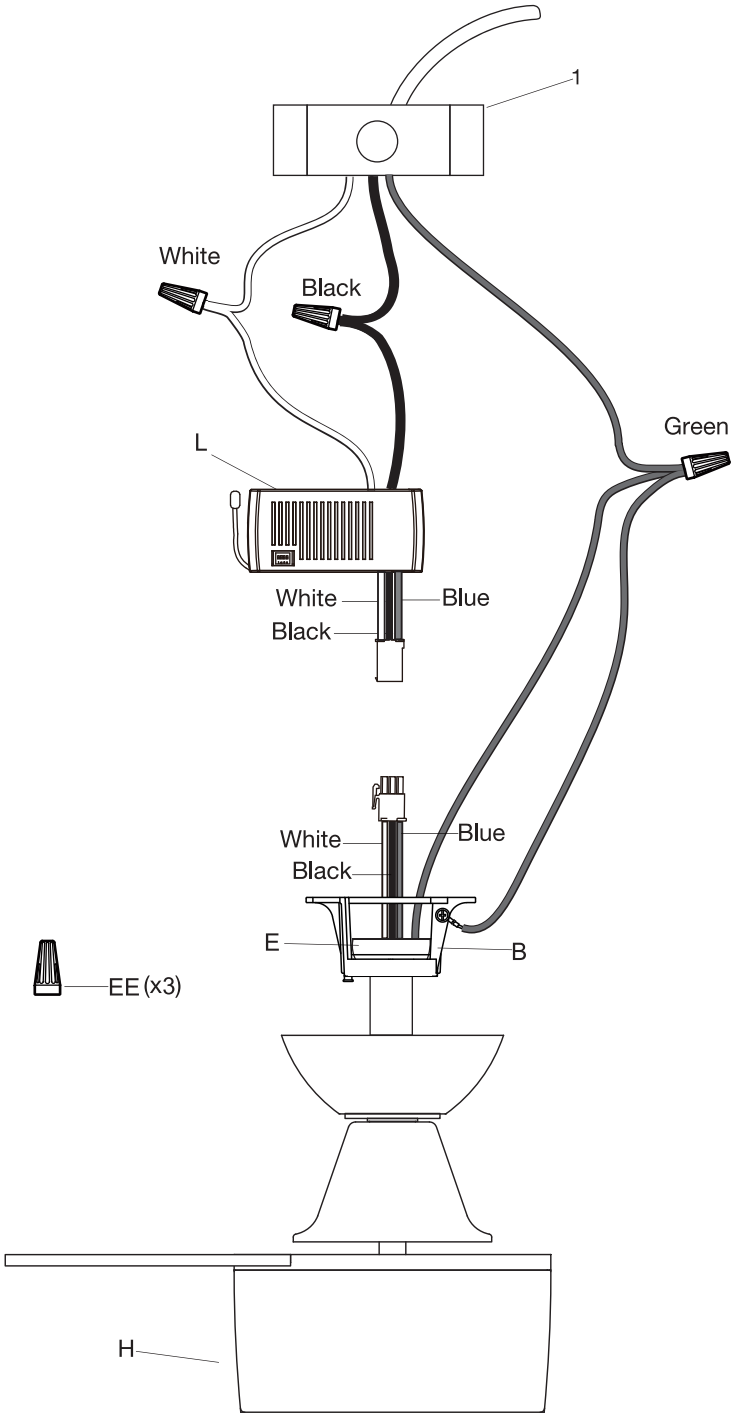

Assembly — Hanging the Fan (continued)

8 Securing the fan motor assembly to the mounting bracket

- ☐ Carefully raise the canopy (C) up to the mounting bracket (B), and ensure the loosened screw (KK) is inserted into the key hole in the canopy (C). Rotate the canopy (C) clockwise.
- ☐ Secure the canopy (C) by replacing the screw (KK) previously removed and tightening the screw (KK) previously loosened.
- ☐ Place the canopy cover (D) on the canopy (C), and rotate the canopy cover (D) clockwise until it locks into position.

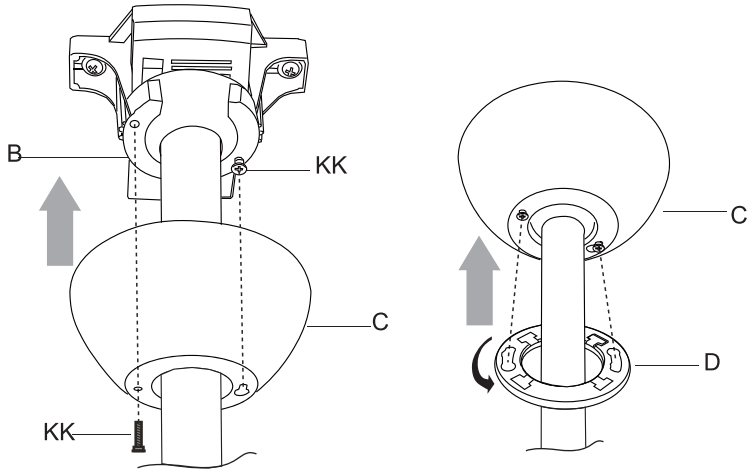

Assembly --Installing the Light Kit Plate

9 Installing the light kit plate

CAUTION: To reduce the risk of electric shock, disconnect the electrical supply circuit to the fan before installing the light kit.

- ☐ Remove the LED assembly (J) from the light kit plate (I) by removing three light kit plate screws (MM). Set these screws (MM) aside for use later.
- ☐ Remove one of three screws (LL) from the fan motor assembly (H) mounting ring and loosen, but do not remove, the other two screws (LL).
- ☐ Place the key holes from the light kit plate (I) over the two screws (LL) previously loosened from the fan motor assembly (H) mounting ring. Turn the light kit plate (I) until it locks in place at the narrow section of the key holes. Secure by tightening the two screws (LL) previously loosened and the one screw (LL) previously removed.

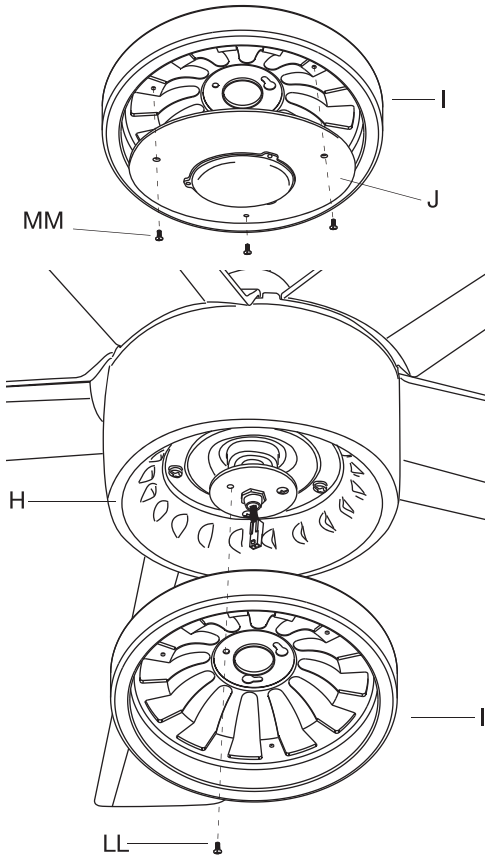

10 Installing the LED assembly

- ☐ While holding the LED assembly (J) under your fan, firmly snap the wire connection plugs (RR) together.
- ☐ Position the LED assembly (J) on the light kit plate (I) and ensure the screw holes are properly aligned.
- ☐ Secure the LED assembly (J) by replacing the three screws (MM) previously removed. Tighten all screws securely.

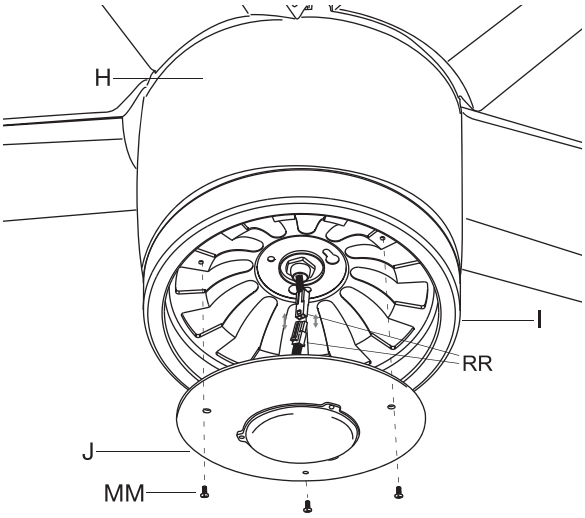

11 Installing the glass shade

- ☐ Pay attention to the black arrow on the LED assembly (J)
- ☐ Raise glass shade (K) up against the LED assembly and align the black arrow on the glass shade (K) to the black arrow on the LED assembly (J)
- ☐ Secure the glass shade (K) to the light kit plate (I) by turning it clockwise.(Fig.3)

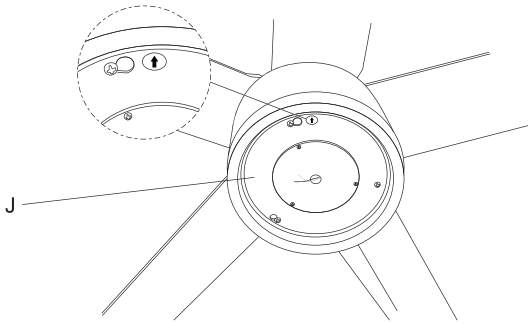

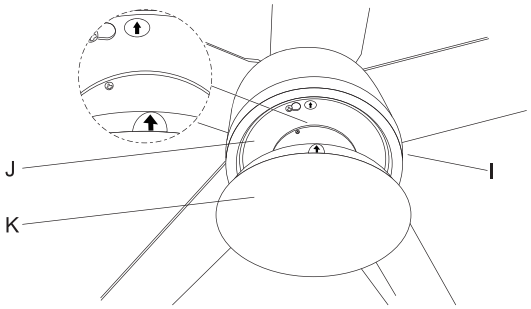

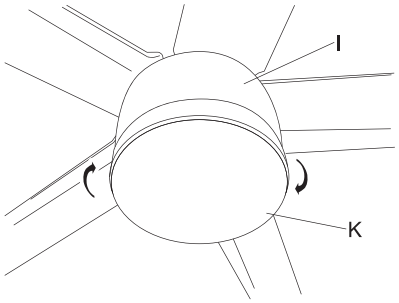

REMOTE CONTROL OPERATING INSTRUCTIONS

Install a 12V battery (O) into the remote control (M). To prevent damage to the remote control, remove the battery if not used for long periods of time.

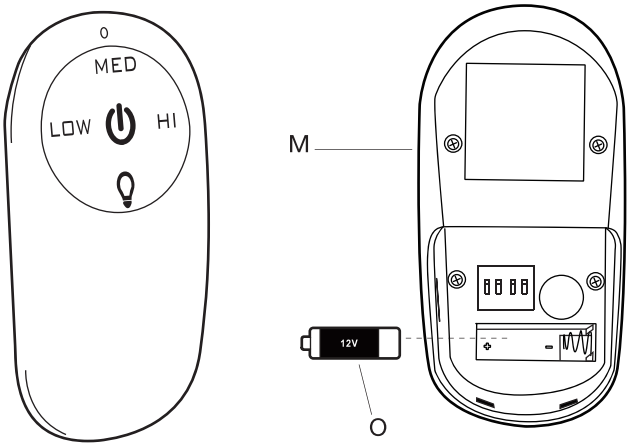

> WARNING: Do not short-circuit, disassemble, heat up, connect improperly, or dispose of used batteries in fire. Do not recharge or mix batteries with used or other battery types. Immediately remove used batteries.

Restore power to the ceiling fan and test for proper operation.

- HI, MED, LOW buttons: Sets the fan speed.
- "⏻" button: Turns the fan off.
- "💡" button: Turns the light ON or OFF. Press and hold the button to set the desired brightness.

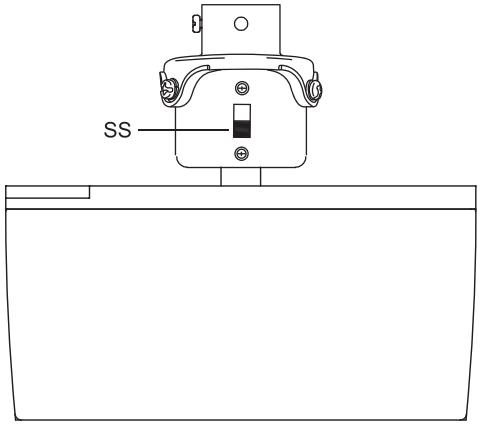

Reverse Function

The reverse switch (SS) is located on the surface of the fan motor assembly.
This switch controls directions: forward (switch down) or reverse (switch up).

> **NOTE:** Wait for the fan to stop before reversing the direction of the blade rotation.

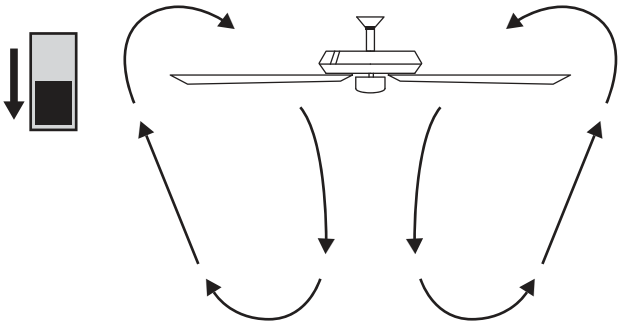

Warm weather - (Counterclockwise Direction) A downward air flow creates a cooling effect. This allows you to set your air conditioner on a warmer setting without affecting your comfort.

Cool weather - (Clockwise Direction) An upward air flow moves warm air off the ceiling. This allows you to set your heating unit on a cooler setting without affecting your comfort.

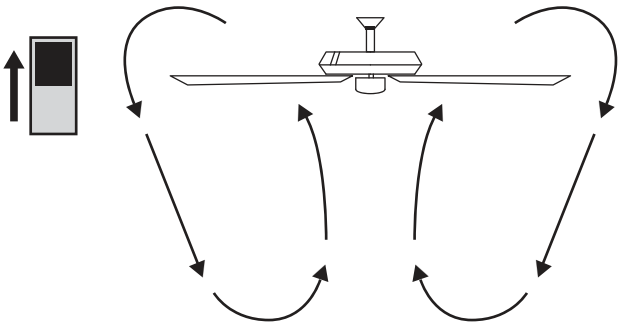

Operation (continued)

INSTALLING THE REMOTE CONTROL HOLDER

- Attach the remote control holder (N) with the two remote control holder mounting screws (DD).

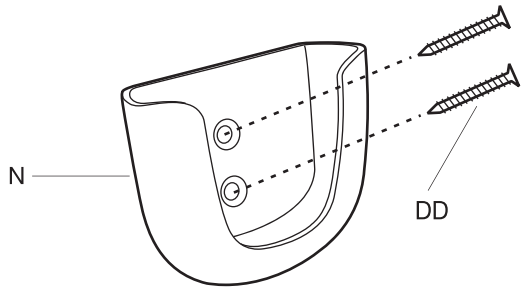

Care and Cleaning

Do

- Check the support connections, brackets, and blade attachments twice a year. Ensure they are secure. Because of the fan's natural movement, some connections may become loose over time. It is not necessary to remove the fan from the ceiling.
- Clean your fan periodically. Use only a soft brush or lint-free cloth to avoid scratching the finish. The plating is sealed with a lacquer to minimize discoloration or tarnishing.
- (Optional) Apply a light coat of furniture polish to the wood blades.
- (Optional) Cover small scratches with a light application of shoe polish.

Do not

- Do not use water when cleaning. Water could damage the motor, or the wood, or possibly cause an electrical shock.
- Do not apply oil to your fan or motor. The motor has permanently-lubricated sealed ball bearings.

Troubleshooting

WARNING: Ensure the power is off at the electrical panel box before you attempt any repairs. Refer to the section "Making the Electrical Connections" on page 11.

Problem	Solution
The fan will not start.	☐ Check main and branch circuit fuses or breakers.
	☐ Check line wire connections to the fan and switch wire connections in the switch housing.
	☐ Check to make sure the dip switches from the remote control and receiver are set to the same frequency.
	☐ Check the wires with the molex plugs to ensure proper connection.
The fan sounds noisy.	☐ Make sure all motor housing screws are snug.
	☐ Make sure the screws that attach the fan blade arm to the motor hub are tight.
	☐ Make sure wire nut connections are not rattling against each other or the interior wall of the switch housing.
	☐ Allow a 24-hour "breaking-in" period. Most noises associated with a new fan disappear during this time.
	☐ If using the ceiling light kit, make sure the screws securing the glassware are tight. Check that the light bulb is also secure.
	☐ Make sure there is a short distance from the ceiling to the canopy. It should not touch the ceiling.
	☐ Make sure your ceiling box is secure and rubber isolator pads are used between the mounting bracket and outlet box.
The remote control is not working.	☐ Do not connect the fan with wall mounted variable speed control(s).
	☐ Check to make sure the dip switches from the remote control and receiver are set to the same frequency.
The fan wobbles.	☐ Check that all blade and blade arm screws are secure.
	☐ Most fan wobble problems are caused when blade levels are unequal. Check this level by selecting a point on the ceiling above the tip of one of the blades. Measure from a point on the center of each blade to the point on the ceiling. Rotate the fan until the next blade is positioned for measurement. Repeat for each blade. Measurements deviation should be within 1/8 in. Run the fan for 10 minutes.
	☐ Use the enclosed blade balancing kit if the blade wobble is still noticeable. Balancing kit includes an additional instruction manual within the packet.

Service Parts

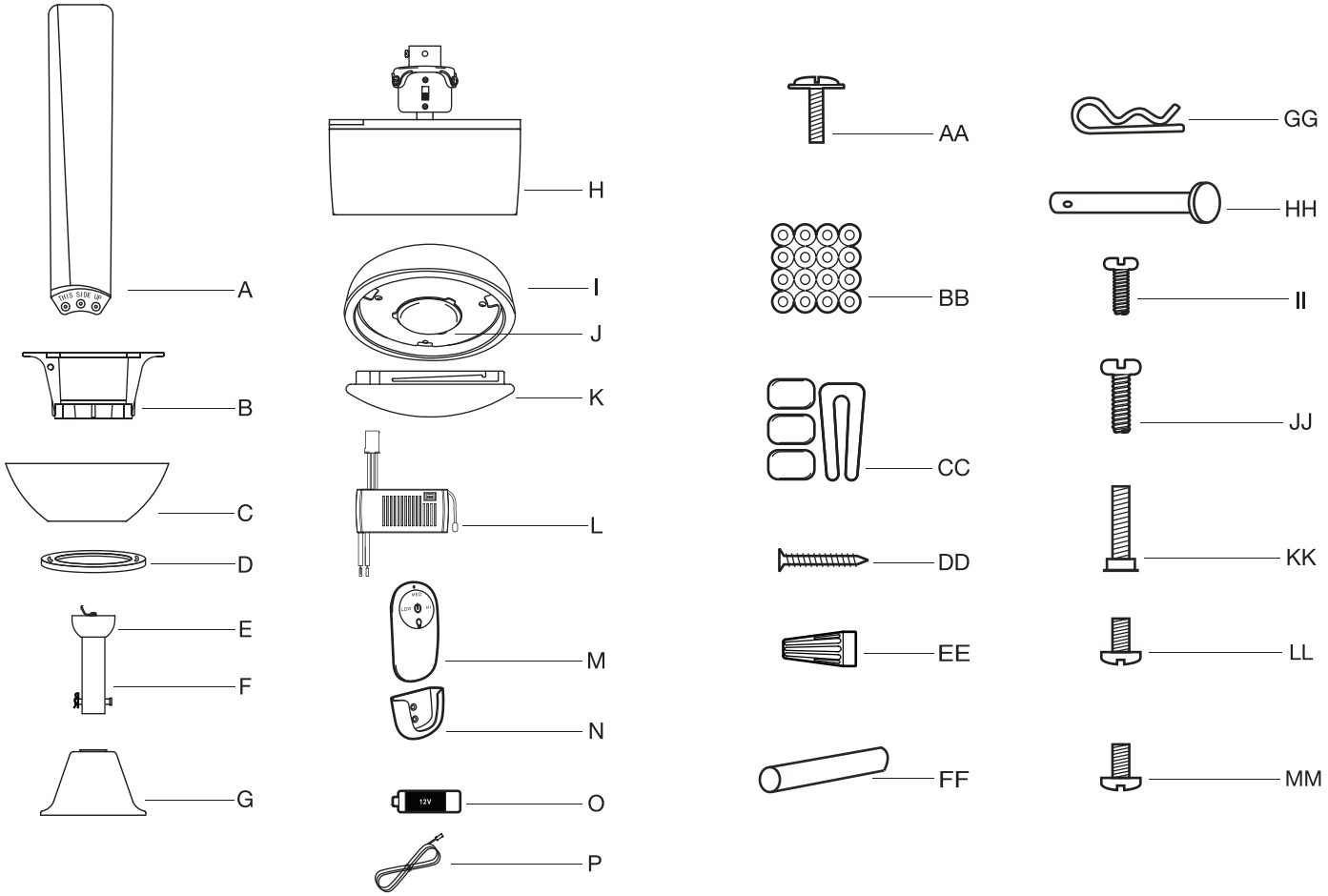

Part	Description
A	Blade
B	Mounting bracket
C	Canopy
D	Canopy cover
E	Hanger ball
F	Downrod
G	Couping cover
H	Fan motor assembly
I	Light kit plate
J	17W LED assembly
K	Glass shade
L	Receiver
M	Remote control
N	Remote control holder
O	12V Battery
P	Extension power cord used for longer downrod (longer downrod not included)

Part	Description
AA	Blade screw
BB	Fiber washer
CC	Balance kit
DD	Remote control holder mounting screws
EE	Wire nuts
FF	Cross pin
GG	Hitch pin
HH	Lock pin
II	Hanger ball set screw
JJ	Fan motor assembly coupling set screw
KK	Mounting bracket screw
LL	Fan motor assembly mounting ring screw
MM	Light kit plate screw

HOME
DECORATORS
COLLECTION®

Questions, problems, missing parts? Before returning to the store,
call Home Decorators Collection Customer Service

8 a.m. - 7 p.m., EST, Monday-Friday,
9 a.m. - 6 p.m., EST, Saturday

1-800-986 3460

HOMEDEPOT.COM/HOMEDECORATORS

Retain this manual for future use.

Supplier's Declaration of Conformity
47 CFR§2.1077 compliance Information

Unique Identifier
Trade name: HOME DECORATORS COLLECTION
Model Number: CF552KR

Responsible Party-U.S Contact Information
Summer wind International, LLC.
755 Regent Boulevard, Suite 275,
Grapevine, TX
75261

Tel: 877-262-7511

FCC Compliance Statement: products subject to Part 15

This device complies with Part 15 of the FCC Rules. Operation is subject to the following two conditions:
(1) This device may not cause harmful interference, and (2) this device must accept any interference received, including interference that may cause undesired operation.