ELKAY®

signature

SPECIFICATIONS

Model SLPFS33224

GENERAL FEATURES

- Top mount
- 20 gauge stainless steel
- Satin finish
- 8-1/4" depth
- Overall size: 33" x 22"
- 3-1/2" center drain opening
- Faucet holes: (4) 1-1/2" diameter
- Cutout dimension: 32-3/8" x 21-3/8" with 1-1/2" radius corners
- Mounting hardware for countertops up to 3/4" thick included
- Sound insulation – spray undercoating on bottom
- Minimum cabinet size: 36"
- Limited lifetime warranty
- This sink does not comply with ASME A112.19.3

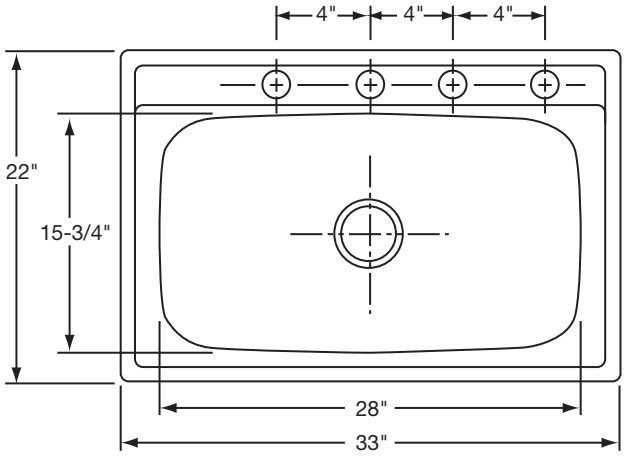

RECOMMENDED ACCESSORIES

Cutting Board: CB1516

Drain: D1125, LK35, LK99

Rinsing Basket: LKWERBSS (LKWUCSS)

ALL DIMENSIONS IN INCHES, TO CONVERT TO MILLIMETERS MULTIPLY BY 25.4.

In keeping with our policy of continuing product improvement, Elkay reserves the right to change product specifications without notice. Please visit elkayusa.com for most current version of Elkay product specification sheets.

This specification describes an Elkay product with design, quality and functional benefits to the user. When making a comparison of other producers' offerings, be certain these features are not overlooked.

Printed in U.S.A.
©2008 Elkay