Window Kit Installation Instructions

Preparations for installing the window kit

You must vent your portable air conditioner when running it in cooling mode or heat mode (certain models). Your unit includes a window exhaust kit that can be used to vent the unit out a window. Before you begin, make sure you have all the parts necessary for installation.

Window Kit Parts List:


8 Screws

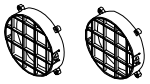
2 Grated Adapters

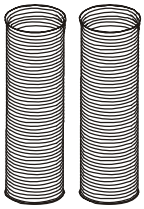
2 Exhaust Hoses

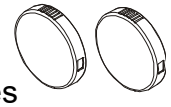
2 Exhaust Covers

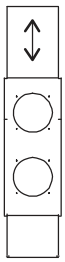
1 Window Kit Plate with Holes

2 Window Kit Plates

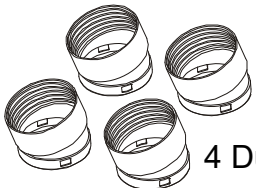
4 Duct Connectors

NOTE: There is one duct connector that includes an opening for the water line for use in the misting drain operation. This connector must be installed to the exhaust outlet on the unit. Please review pages 9-10 for more details.

Parts for Continuous and Misting Drainage


1 Water Line

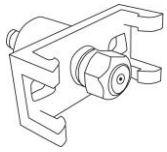
1 Misting Nozzle

If you have multiple windows, choose one that is near an electrical outlet that will be able to provide sufficient power to your unit. See the power requirements listed on the product label printed on the side, or on the back of your portable air conditioner.
Your window kit can be installed on a horizontal or vertical sliding window as shown in the following pictures:

NOTE: Exhaust Covers may be attached to the Grated Adapters. You may need to twist and pull apart to separate them.

NOTE: You may need to contact your electrician if your room's circuit is not able to power your unit.

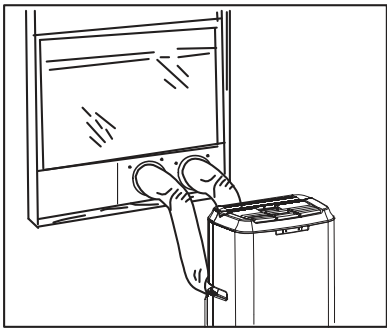

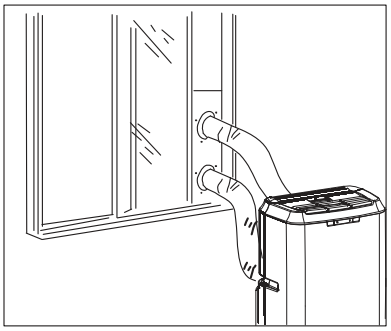

Installing the grated adapter

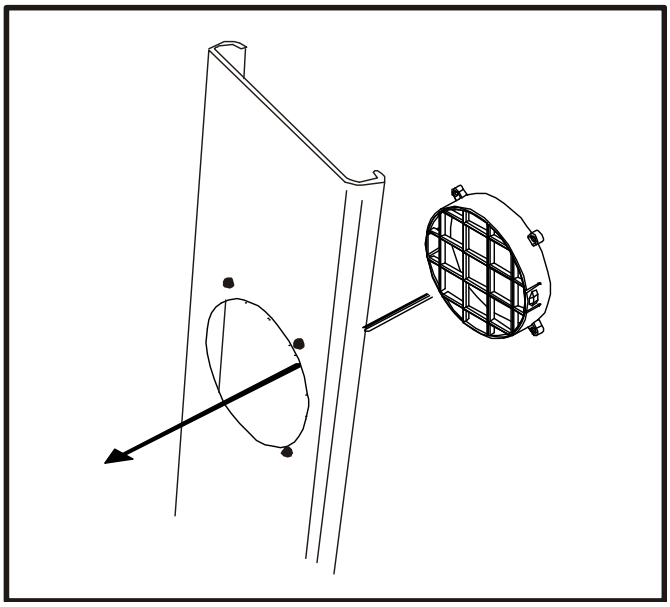

1. Insert the round grated adapters through the back grooved side of the window kit plate with holes.

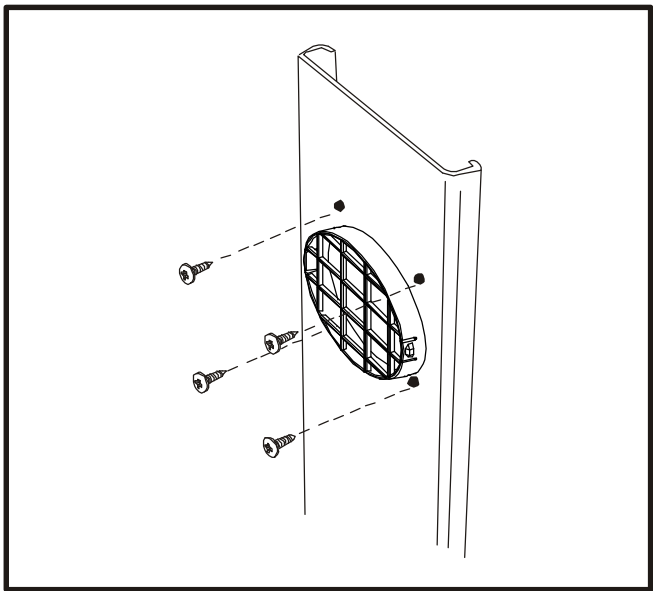

2. Secure the grated adapters by fastening the screws from flat side of the window kit plate to the holes on the grated adapter.

Installing the window plates

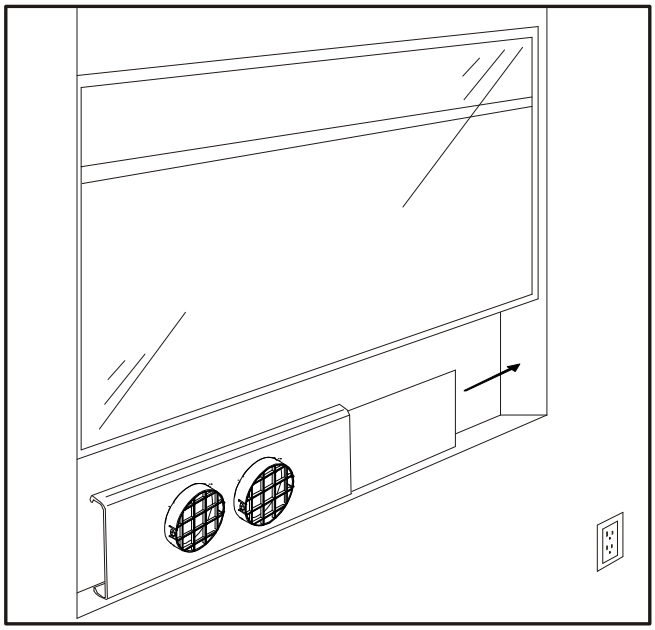

3. Open your window and place the window kit with grooved side facing outward on the window sill. Then, slide the window kit plate to fit the width of the window. You can use screws to secure the window kit plate from sliding.

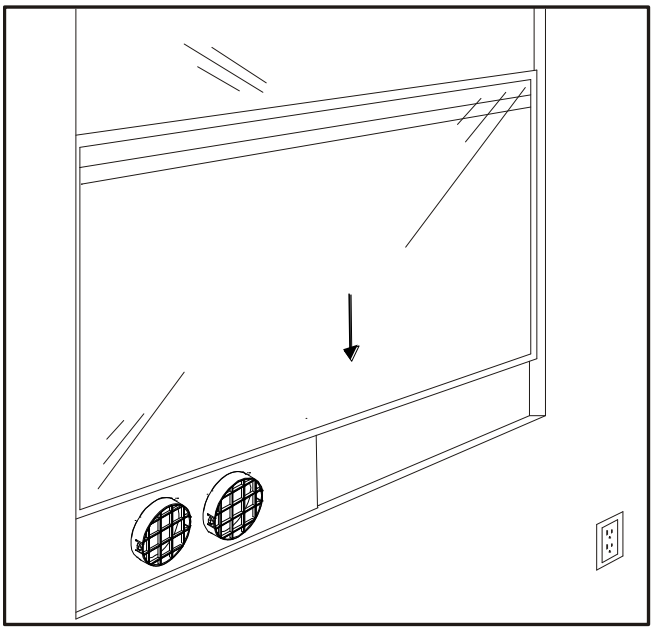

4. Lower the window to secure the window kit in place. You may need to use duct tape to better secure the window kit.

Attaching the duct connectors to the exhaust hose

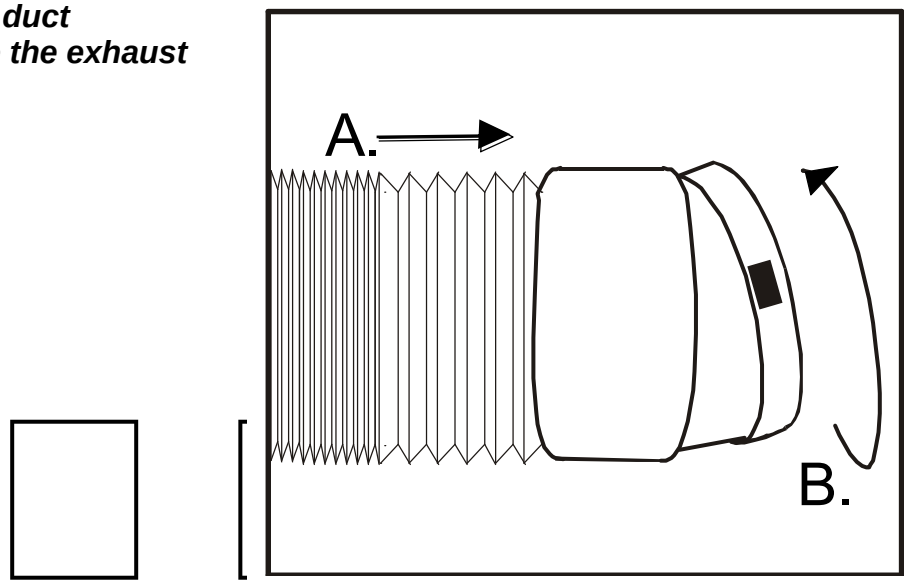

5. Attach the connectors to the hose:
A. Extend the ends of the exhaust hose
B. Thread the duct connector on by turning it clockwise until it stops.

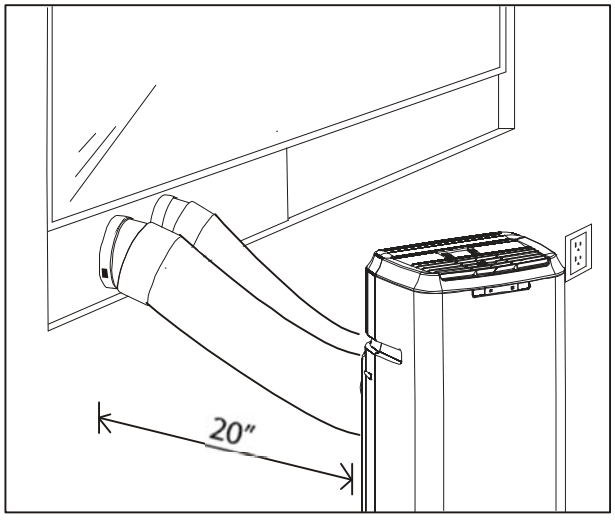

6. Roll the unit towards the window kit. Leave a space that is at least 20 inches to the wall.

Connecting the duct connector to the unit

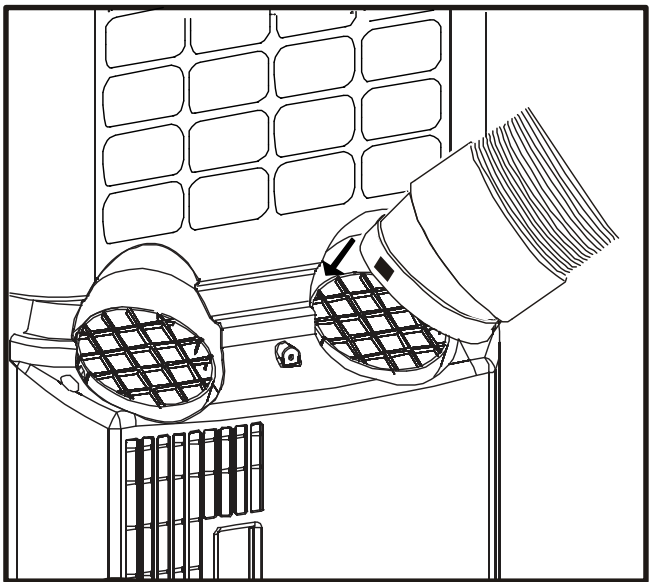

7. Align the slots on the duct connector to the tabs and snap into the back of the unit. In order to use the misting drain feature you will need to attach the duct connector with opening for the water line to the exhaust outlet on the unit.

Connecting the duct connector to the grated adapter

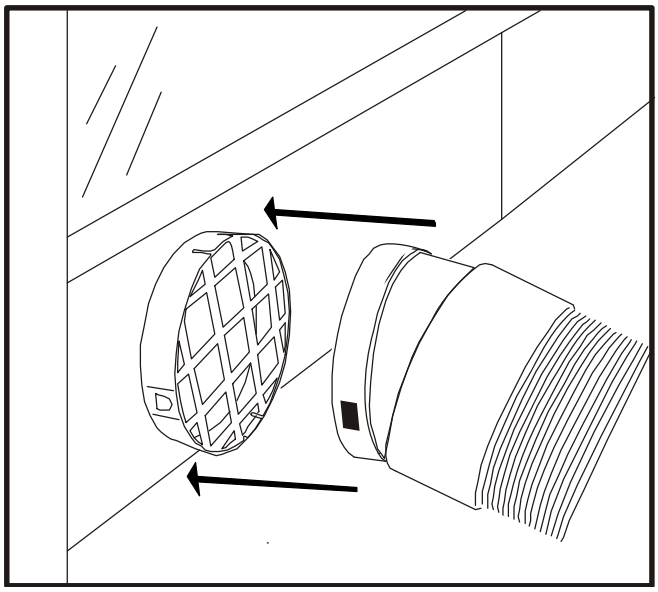

8. Align the slots on the duct connector to the tabs on the grated adapter and snap in place.

After you have installed the exhaust hose and window kit, you can plug in your portable air conditioner and start using it.

Notes about the Exhaust hose

Your portable air conditioner is designed to exhaust condensate water that is collected from the air. This water, in either gaseous or droplet form, will be expelled out the exhaust port of the unit. Please take this into account when deciding how to vent it.

1. The exhaust hose supplied with the portable air conditioner can be extended up to 48 inches; however for maximum efficiency, use the shortest length possible.

2. Try to prevent any kinks or bends in the exhaust hose. Kinks or bends may trap exhaust air which can radiate heat into the room or potentially cause the portable air conditioner to overheat and shut itself off.

3. The exhaust hose supplied with the portable air conditioner has been specifically designed for this air conditioner. Do not lengthen the hose by adding additional hoses or attachments or replace it with any other hose.

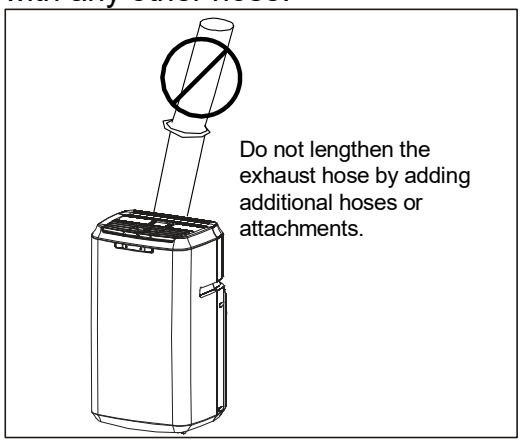

Warning: Longer hoses are not recommended.

Draining the Unit

When the portable air conditioner is in cooling mode, dehumidify mode, or heat mode on certain models, it will remove moisture from the air. The condensed water from the air will be collected in an internal reservoir and will be evaporated and exhausted out of the exhaust hose. However, in very humid conditions, the internal reservoir may fill completely. This causes the air conditioner to turn off to avoid overflowing the internal reservoir. The WATER indicator will light up on the Control Panel.

Direct drainage

1. Remove the rubber drain plug from the drain port.
2. Connect a drain hose to the drain port.

The portable air conditioner will now drain through the drain hose.

Drainage Options

Your Avallon portable air conditioner comes with several different options to drain water accumulated during operation. The most common will be the self evaporative mode. The unit will do this automatically. This mode will be sufficient for the most environments. If you are operating the unit in an environment with higher levels of humidity you may choose the other drainage options to help remove the excess water.

Continuous Drain

This unit has the ability for continuous drain. It includes an internal pump to help remove water. The benefit is the unit will push the water to the drain instead of relying on gravity for the water to reach the drain. If there is an obstacle in between the unit and the drain the pump will push the water over that obstacle through the water line. In order to run continuous drain you will need to do the following:

1. Connect the included water line to the unit. You will need to attach the quick connect adapter on the end of the water line to the back of the unit.

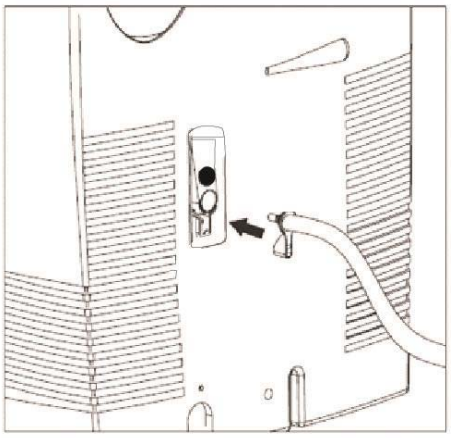

2. Place the other end of the water line (drainage end) into a drain.

The unit will recognize the quick adapter is attached and will automatically engage the water pump. The pump will turn on once the water reservoir becomes full.

Misting Drain

Your unit also includes the unique misting drain option. If a drain is not present this option will allow the unit to remove the excess moisture out the exhaust hose through a mist nozzle. The mist nozzle MUST be setup in the exhaust hose and NOT the intake hose. In order to run the misting drain option you will need to do the following:

1. Connect the included water line to the unit. You will need to attach the quick connect adapter on the end of the water line to the back of the unit.

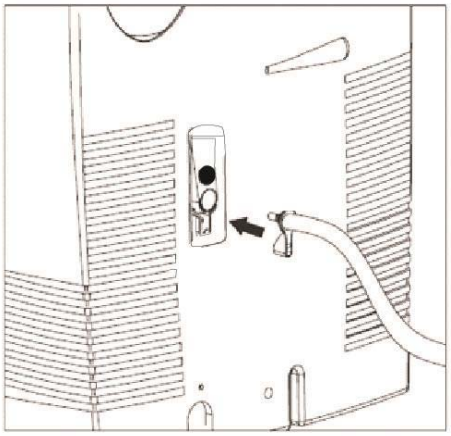

NOTE: The water line quick connect includes a trigger to let the unit know a water line is attached. The unit will not pump water out of this drainage hole unless the quick connect water line is attached.

CAUTION: The water line will contain some water if the pump has been in use. If you are going to detach the water line from the unit be sure to keep the end of the water line elevelated once it is detached to avoid water spilling. Drain the remaining water in the water line if you are preparing for storage of the unit.

2. Run the remaining water line into the exhaust hose through the opening in the exhaust hose adapter. This adapter MUST be installed on the exhaust outlet of the unit. If the adapter is not installed in this position you will need to adjust the adapters. Run the excess water line into the cavity of the exhaust hose.
3. Connect the mist nozzle to the end of the water line. Ensure the water line is attached securely to the mist nozzle.
4. Attach the mist nozzle to the grated adapter. Make sure the mist nozzle is directed to mist outside of the window and not back into the exhaust hose.

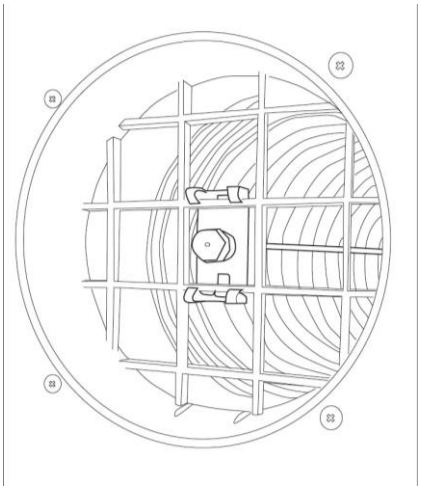

NOTE: It is recommended to attach the misting nozzle in a vertical position on the grated adapter.

The unit will now automatically mist any excess water to the outside. Installing the mist system in the exhaust hose ensures all of the moisture is pushed completely away from the window.