REPAIR SHEET

BRAND	DESCRIPTION
RYOBI	**40V 550 CFM Blower**

MODEL NO.	MFG. NO.
RY40LB01	**106882001**

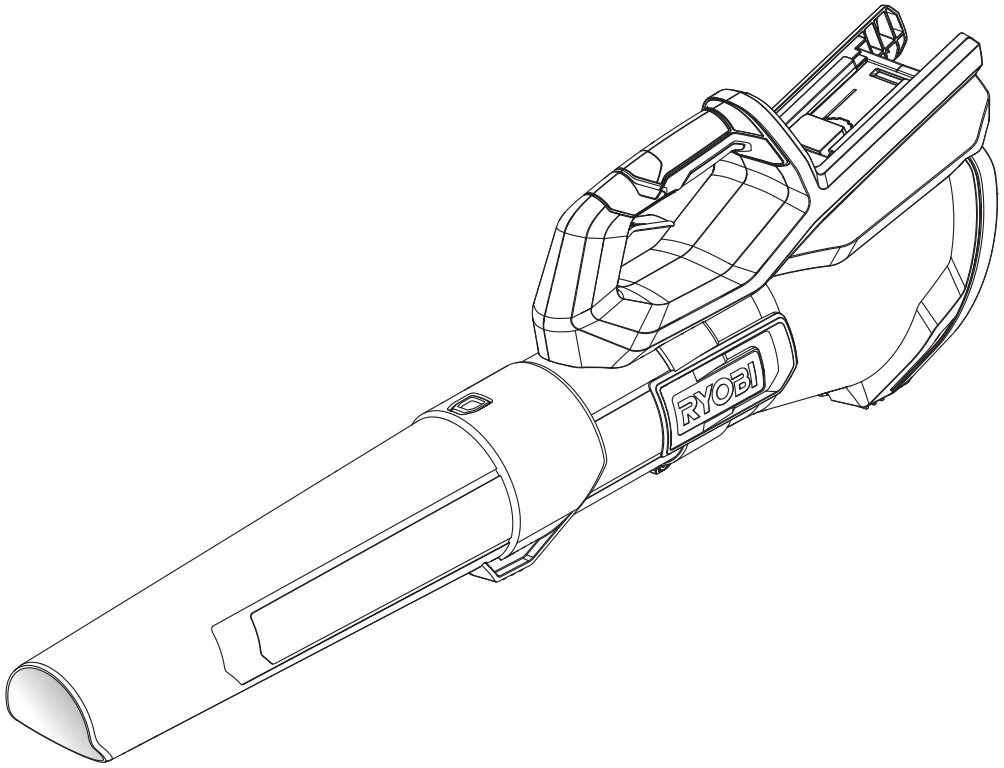

TTI OUTDOOR POWER EQUIPMENT, INC.
P.O. Box 1288, Anderson, SC 29622 ■ 1-800-525-2579 ■ **www.ryobitools.com**

2-14-24 (Rev:01)

The model number and manufacturing location will be found on a label attached to the product. Always mention this information in all communications regarding this product and when ordering parts.

RY40LB01

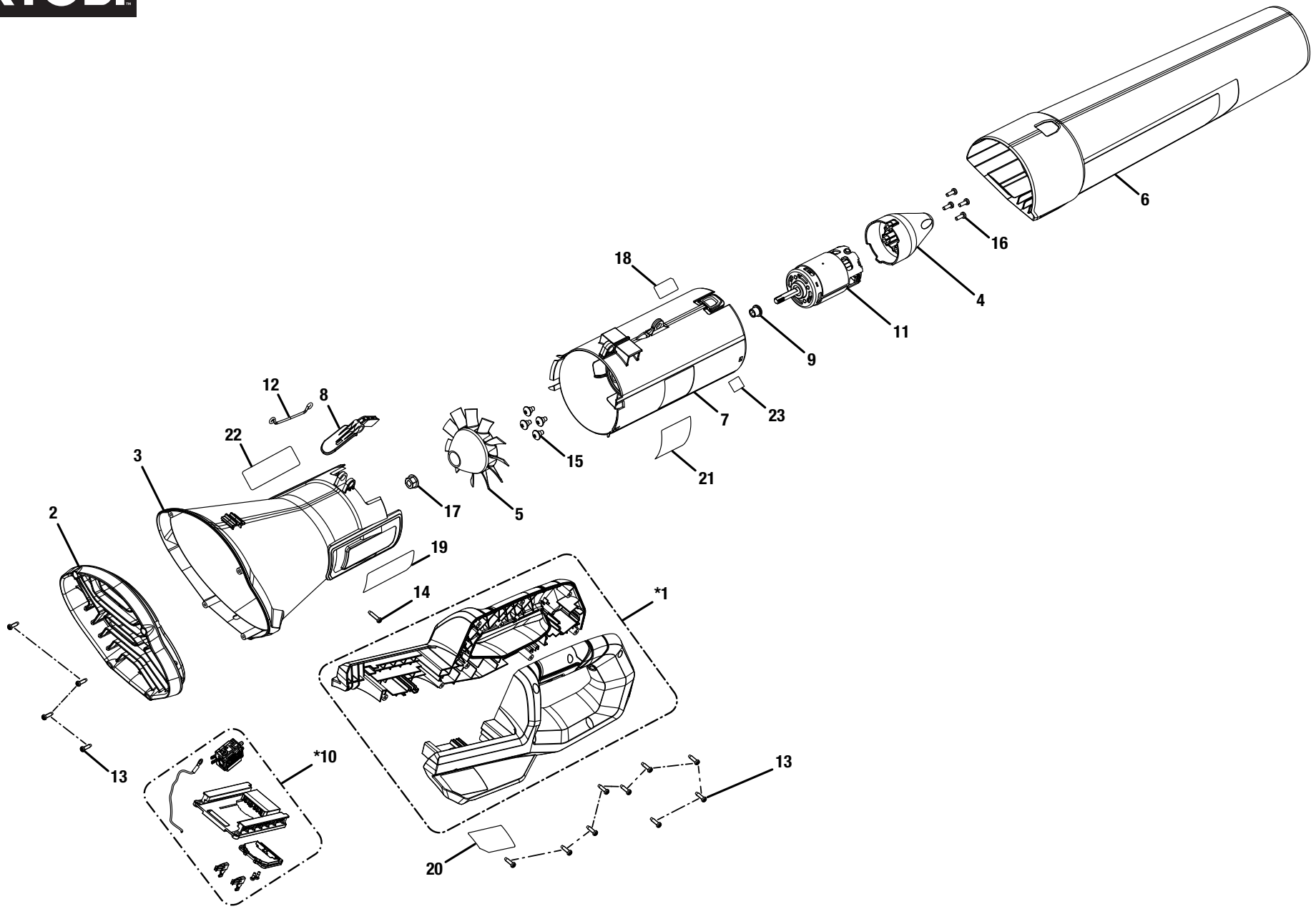

* Part comes as a complete assembly. Individual components of an assembly will not be offered separately, unless listed in the parts list.

RY40LB01

KEY NO.	PART NO.	DESCRIPTION	QTY.
*1	205337002	Handle Assembly (inc. Key No. 20)	1
2	553289001	Inlet Guard	1
3	205337003	Inlet Bell Assembly (Inc. Key Nos. 19 & 22)	1
4	553291001	Nose Cone	1
5	553292001	Fan	1
6	553293001	Tube	1
7	205337004	Motor Mount Assembly (Inc. Key Nos. 18, 21 & 23)	1
8	553296001	Trigger	1
9	686311001	Bushing	1
*10	205337005	Battery Holder & Switch assembly	1
11	742510005	Motor	1
12	699550003	Grounding Strap	1
13	661817001	Screw (M4 x 13.5 mm, T15 Torx. Pan Hd.)	13

KEY NO.	PART NO.	DESCRIPTION	QTY.
14	661864007	Screw (M4 x 18 mm, T15 Torx. Pan Hd.)	1
15	661974001	Screw (M5 x 10 mm, Pan Hd.)	4
16	660925003	Screw (M4 x 12 mm, T20 Torx. Pan Hd.)	4
17	678128002	Nut	1
18	941110307	QR Code Label	1
19	941110308	Data Label	1
20	941110309	Icon Label	1
21	941110310	Warning Label (FR/SP)	1
22	941110312	Ryobi Logo Label	1
23	941110210	Blower 58 dB Label	1
	Not Shown:		
	999000329	Operator's Manual	

*** Part comes as a complete assembly. Individual components of an assembly will not be offered separately, unless listed in the parts list.**

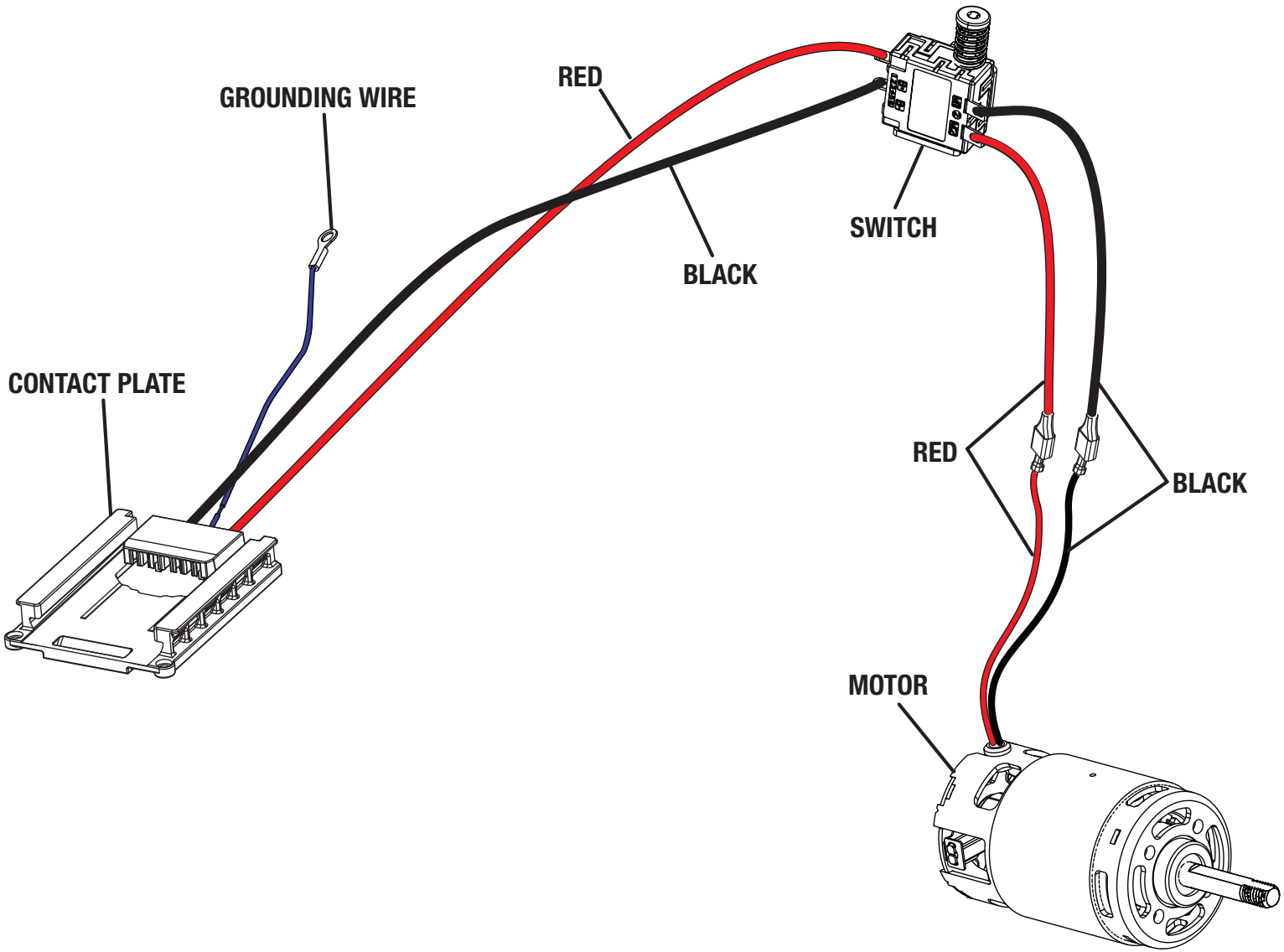

WIRING DIAGRAM

REPAIR SHEET

BRAND	DESCRIPTION
RYOBI	**40 Volt Power Head**

MODEL NO.	MFG. NO.
RY40PH01	**317945002**

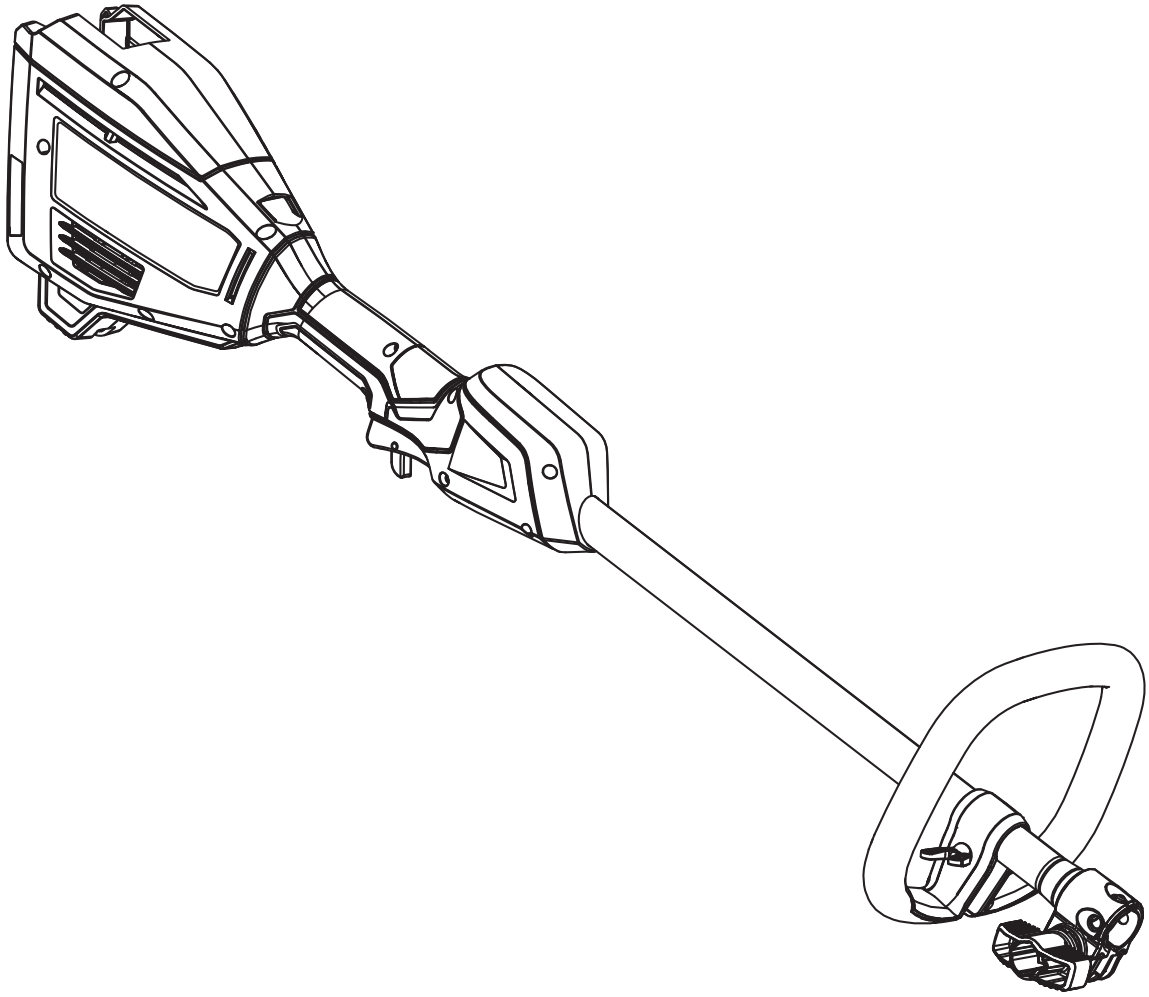

TECHTRONIC INDUSTRIES POWER EQUIPMENT
P.O. Box 1288, Anderson, SC 29622 ■ 1-800-525-2579 ■ **www.ryobitools.com**

1-22-24 (Rev:01)

The model number and manufacturing location will be found on a label attached to the product. Always mention this information in all communications regarding this product and when ordering parts.

RY40PH01

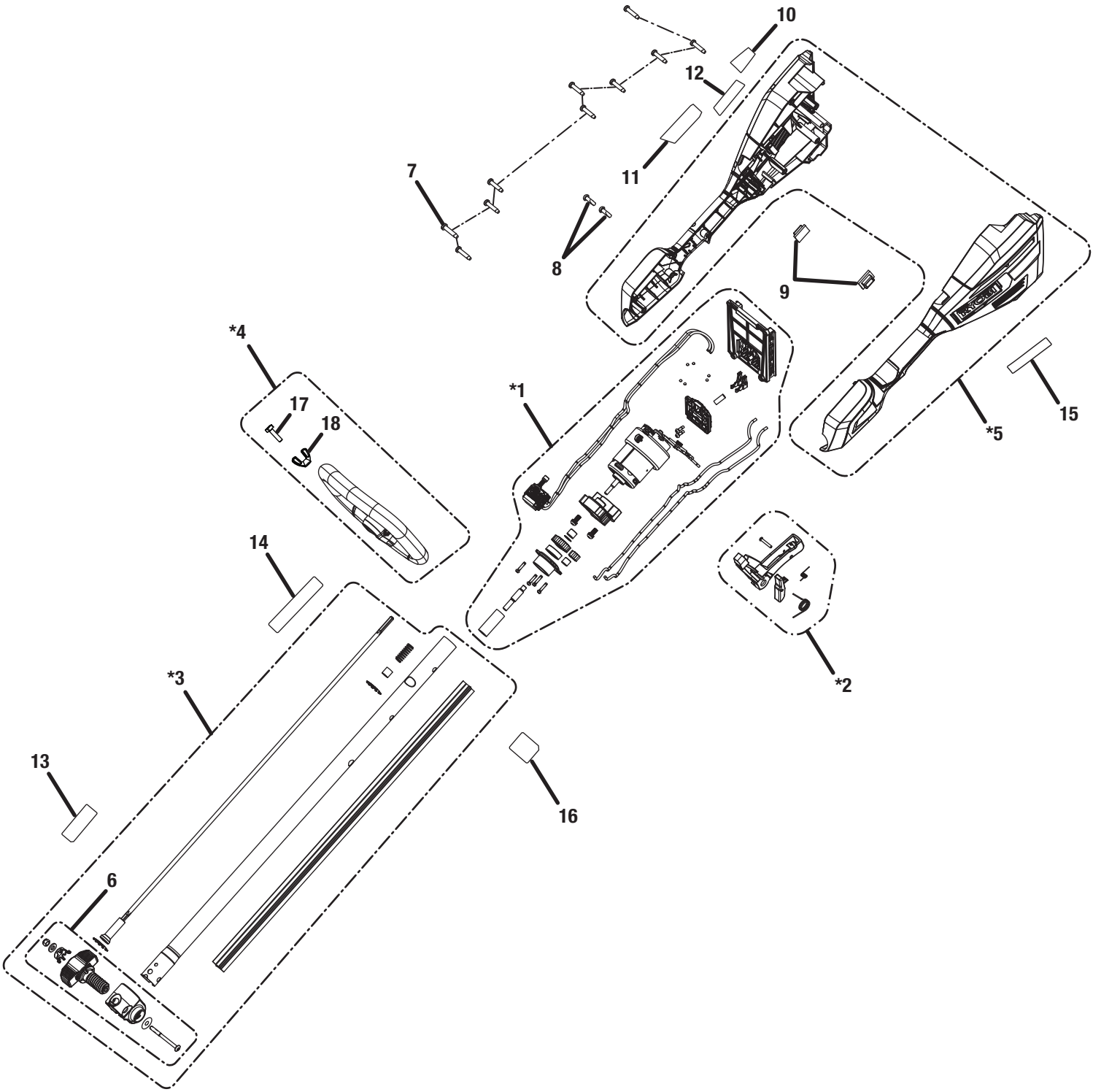

* Part comes as a complete assembly. Individual components of an assembly will not be offered separately, unless listed in the parts list.

RY40PH01

PARTS LIST

KEY NO.	PART NO.	DESCRIPTION	QTY.
*1	205435010	Motor, Gear Box, Switch & Contact Plate Assembly	1
*2	314833001	Switch Trigger Assembly	1
*3	205032008	Boom Assembly (Inc. Key No. 6, 13-14 & 16)	1
*4	308991003	Front Handle Assembly (Inc. Key Nos. 17-18)	1
*5	205004007	Rear Handle Assembly (Inc. Key Nos. 9-12 & 15)	1
6	315386001	Boom Clamp Assembly	1
7	661864007	Screw (M4 x 18 mm, T15 Torx. Pan Hd.)	10
8	660005006	Screw (M3 x 10 mm)	2
9	570115001	Rubber Plate	2
10	941263373	Data Label	1

KEY NO.	PART NO.	DESCRIPTION	QTY.
11	941263370	Warning/Icon Label	1
12	941263369	Battery Statement Label	1
13	941263372	QR Label	1
14	941263388	Attachment Capable Label	1
15	940705496	Ryobi Logo Label	1
16	940779563	Harness Label	1
17	660643008	Screw	1
18	518949001	Wing Nut (1/4-20)	1
	Not Shown:		
	999000282	Operator's Manual	

*** Part comes as a complete assembly. Individual components of an assembly will not be offered separately, unless listed in the parts list.**

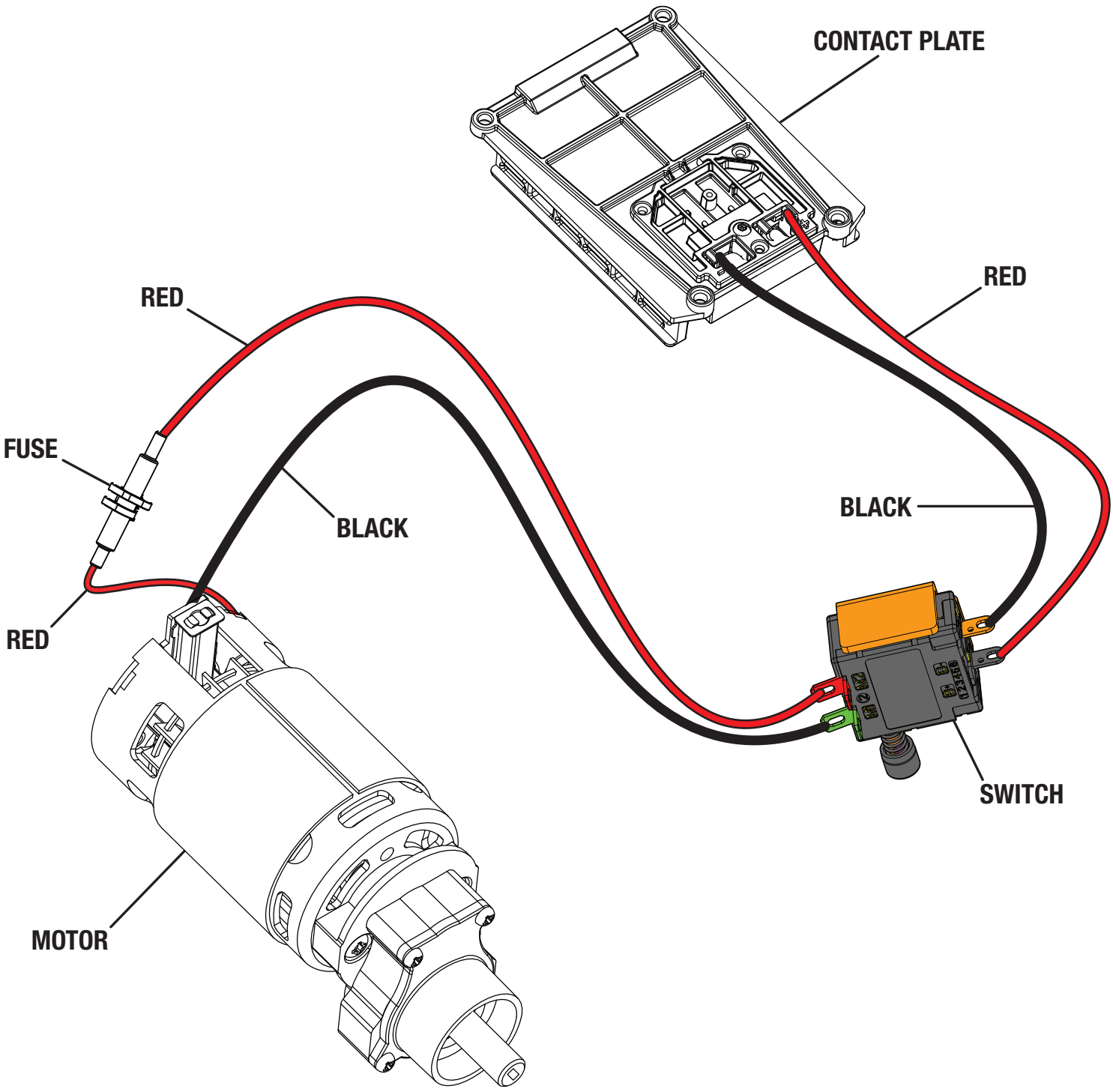

WIRING DIAGRAM

REPAIR SHEET

BRAND

RYOBI

MODEL NO.

A54ST01

MFG. NO.

311247017

DESCRIPTION

EXPAND-IT Straight Shaft Trimmer Attachment

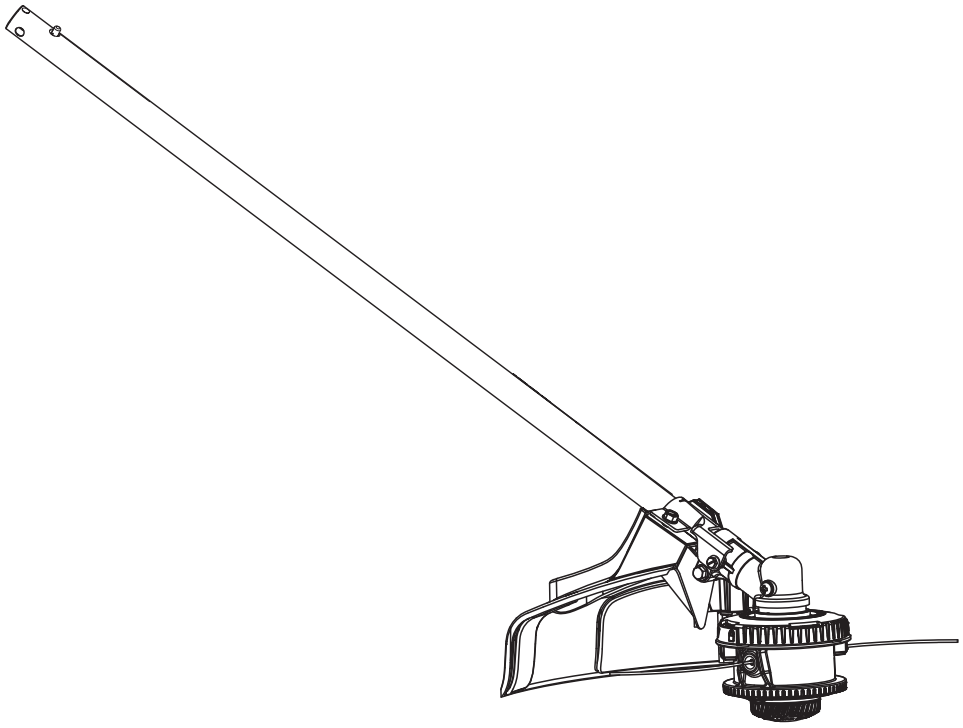

TTI OUTDOOR POWER EQUIPMENT, INC.
P.O. Box 1288, Anderson, SC 29622 ■ 1-800-525-2579 ■ **www.ryobitools.com**

1-12-24 (Rev:01)

The model number and manufacturing location will be found on a label attached to the product. Always mention this information in all communications regarding this product and when ordering parts.

A54ST01

PARTS LIST

KEY NO.	PART NO.	DESCRIPTION	QTY.
1	941588552	Max. Run Time/Performance Label	1
2	205033003	Straight Shaft Assembly (Inc. Key Nos. 3-5)	1
3	941263387	Lower Boom Icon Label	1
4	941851149	Ryobi Expand-it Label	1
5	941263402	Data Label	1
6	660738002	Screw (1/4-20 x 1-1/4 in., Hex Washer Hd.)	1
7	679958001	Compression Spring	1
8	205173008	Grass Deflector Assembly (Inc. Key No. 1 & 9-10)	1
9	638016007	Line Cut-off Blade	1
10	662148001	Screw (M4.5 mm x 1 mm, Pan Hd.)	2
11	660642001	Screw (1/4-20 x 1-1/4 in., Hex Washer Hd.)	1
12	660641001	Screw (10-24 x 5/8 in., Hex Washer Hd.)	1
13	678011001	Flanged Washer	1
14	308210009	Gear Head	1
15	205672002	Bump Feed Trimmer Head Assembly (Inc. Key Nos. 7 & 17)	1
16	638125001	Grass Deflector Clamp	1
17	941097129	String Head Logo Label	1
	Not Shown:		
	999000343	Operator's Manual	

