SharkBite
Angle Stop Valve with Braided Supply Line

Used to control the flow of water to household plumbing fixtures and appliances. Ideal for maintenance and repair without having to shut-off water to the entire home.

Features and Benefits

- Sleek chrome finish for an attractive appearance.
- Quarter-turn full-port brass ball valve.
- Compatible with PEX, copper, CPVC and PE-RT HDPE pipe.
- Integrated braided supply line connects directly to fixture.
- No special tools, crimping, glue or soldering is needed.
- Can be installed in wet lines
- Ideal for working in tight spaces.
- Remove using a Disconnect Clip or Disconnect Tongs (both sold separately).

#24657

Applications

- Potable water
- Recirculation

Specification

The tube shall be inserted into the SharkBite PTC Fitting in the first stage through a release collar and then through a stainless-steel grab ring. The grab ring has teeth that open out and grip onto the tube. At the second stage the tube shall be pushed through an O-ring protector which aligns the pipe. A specially formulated EPDM O-ring shall be compressed between the wall of the fitting and the tube before the end of the tube reaches the tube stop. Only when the pipe has passed through the O-ring and reached the pipe stop shall a secure joint be created. The fitting shall be a SharkBite PTC Fitting. The fitting shall be a SharkBite PTC Fitting.

AN RWC BRAND

Specification Data

Performance

Minimum working temperature	33ºF
Maximum working temperature	160ºF
Maximum working pressure	125 psi

Materials

1	Screw	Steel
2	Handle	Zinc
3	Spindle	DZR LF Brass [1]
4	O-ring	EPDM
5	Seat	PTFE
6	Ball	DZR LF Brass [1]
7	Body	DZR LF Brass [1]
8	Cover	ABS
9	Olive	Copper
10	Cap	DZR Brass
11	End Plug	DZR LF Brass [1]
12	Braiding	SST
11	Hose Liner	PVC

[1] Lead Free for all models, surfaces that are in contact with consumable water contain less than 0.25% lead by weight.

Installation Requirements

1. Turn off water supply, and drain the line.
2. Cut pipe square or remove existing valve and disconnect supply line.
   Remove burrs from inside and outside of pipe.
4. Mark 0.95-in insertion depth on pipe using depth gauge tool.
5. Push valve onto pipe to insertion depth mark.
6. Connect and tighten supply line to fixture
7. Turn on water and check connections.

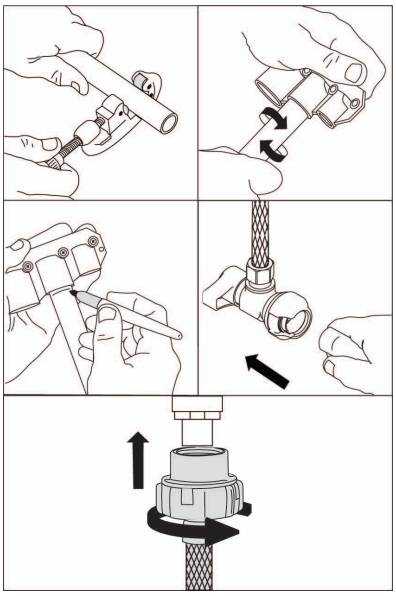

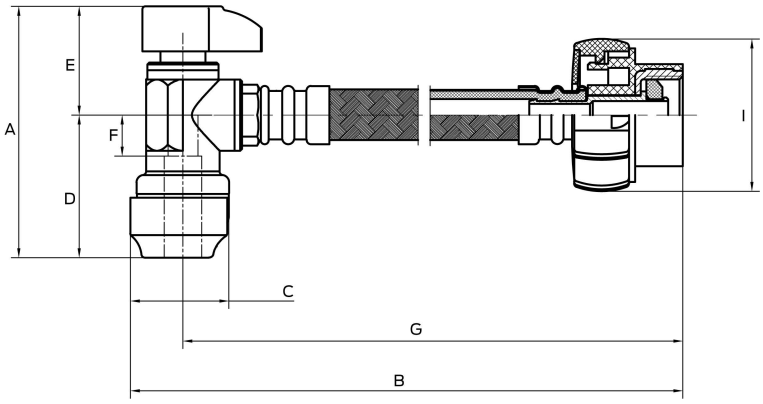

24657

Dimensions

Description	Part #	A	B	C	D	E	F	G	H
1/2 In. PTC X 1/2 In. FIP x 20 In.	24657	2.58	20.55	1.09	1.55	1.03	0.41	20.0	1.63
1/2 In. PTC X 7/8 In. BC x 12 In.	24656	2.58	12.55	1.09	1.55	1.03	0.41	12.0	0.55

All measurements are displayed in inches

Insertion Depth

Fitting Size	Nominal Pipe Size	Pipe OD	Insertion Depth(in)
1/2 in.	1/2 in. CTS	5/8 in.	0.95

Pipe Type

Tubing: Hard drawn copper pipe Type K, L and M and annealed Type M not to exceed 3/8 nominal complying with ASTM B 88, PEX tubing complying with ASTM F 876 or CSA B137.5, or CVPC tubing complying with ASTM D 2846 or CSA B137.6, PE-RT tubing complying with ASTM F2769 or CSA B137.18

SharkBite Fitting Reuse

SharkBite Universal fittings are intended to be a permanent connection and are not designed for repeated connection and disconnection after the initial install.

Minimum Distance Between Fittings

1/2 in. spacing between ends of completed Connections

Codes and Standards

ASME A112.18.1

CSA B125.1-12

NSF/ANSI/CAN 61

NSF/ANSI 372

US 1 877 700 4242 | sales@sharkbite.com | sharkbite.com
Canada 1 888 820 0120 | canadasales@rwc.com