NOVATTO

WHERE STYLE FLOWS

# Copper Bar/Prep Sink Guide

P: 844.404.4242 I support@novatto.com I Novatto.com I #WhereStyleFlows

# UNDERMOUNT ASSEMBLY

## Please Note:

Today's bathroom vanity heights typically range from 34"-36", often referred to as "comfort height", while traditional vanities are slightly shorter, around 30"–32". The best choice depends on personal preference and accessibility needs. For example, ADA compliant vanities must meet specific dimensions for wheelchair users, while lower heights (30"–32") can work well in smaller bathrooms or for children.

- Review and abide by all building and plumbing codes.
- The following instructions **assume your professional** has already cut the proper sink and faucet hole(s) using the actual sink as a template and discussing faucet placement with you.

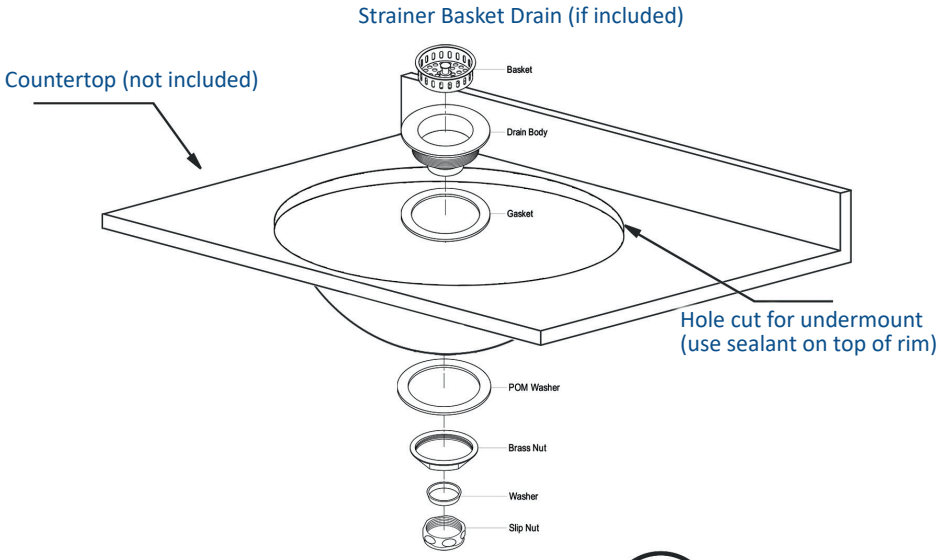




DO NOT OVER TIGHTEN THE DRAIN!

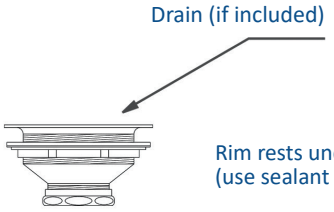


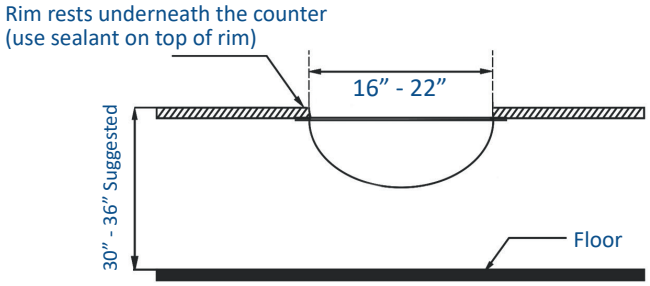


## Steps to Complete Your Project

- **Wipe down** both the sink's rim and the underside of the countertop (undermount) or topside of the countertop (drop-in) where the sink will attach.
- **Before applying** any adhesive, perform a dry fit of the sink and faucet to ensure proper placement.
- **Apply a continuous,** generous bead of silicone or epoxy around the top of the sink's rim (undermount) or around the underside of the sink's rim or the counter top cutout (drop-in).
- **Undermount, raise the sink** into the cabinet and press it firmly up against the underside of the countertop. This creates the initial seal.
- **Drop-In, lower the sink** and carefully place it into the countertop cutout.
- **While holding the sink in placed** use a 2x4 across the countertop and a bar clamp inserted through the drain hole to compress the sink. Place a protective piece of wood under the clamp on the sink's underside to prevent damage. You may also use install brackets or straps.
- **Ensure the sink is properly aligned** and leveled. Then tighten up the clamps, brackets or straps.
- **Use a damp cloth or rag** to wipe away any excess sealant.
- **Allow the silicone or epoxy to cure** completely, which can take up to 24 hours, depending on the product's instructions, to ensure a watertight seal before using the sink.

**After installation,** clean the sink with warm water, mild soap, and a soft cloth. Rinse thoroughly and dry with a fresh soft cloth. To help protect the sink from water spots, and stains, apply either a specialized clear protective coating or copper wax following the products instruction carefully. The best option depends on the level of protection you prefer and the amount of ongoing maintenance you're comfortable with.

## TROUBLESHOOTING TIPS

| Issue | Reason | Solution |
|---|---|---|
| Sink wobbles or is loose | Failed adhesive; Support is inadequate | Apply new, high-quality adhesive; Tighten or add brackets |
| Does not completely drain | Drain sits too high; Sealant damn; Clogged P-trap | Re-sit drain below bevel; Remove excess sealant; Clean out P-trap |
| Leakage under sink | Drain has come loose; Sealant not applied properly around flange | Tighten the fastener under the sink; Re-apply sealant around flange |

# DROP-IN ASSEMBLY

## Please Note:

Today's bathroom vanity heights typically range from 34"- 36", often referred to as "comfort height", while traditional vanities are slightly shorter, around 30"- 32". The best choice depends on personal preference and accessibility needs. For example, ADA compliant vanities must meet specific dimensions for wheelchair users, while lower heights (30"- 32") can work well in smaller bathrooms or for children.

- Review and abide by all building and plumbing codes.
- The following instructions **assume your professional** has already cut the proper sink and faucet hole(s) using the actual sink as a template and discussing faucet placement with you.

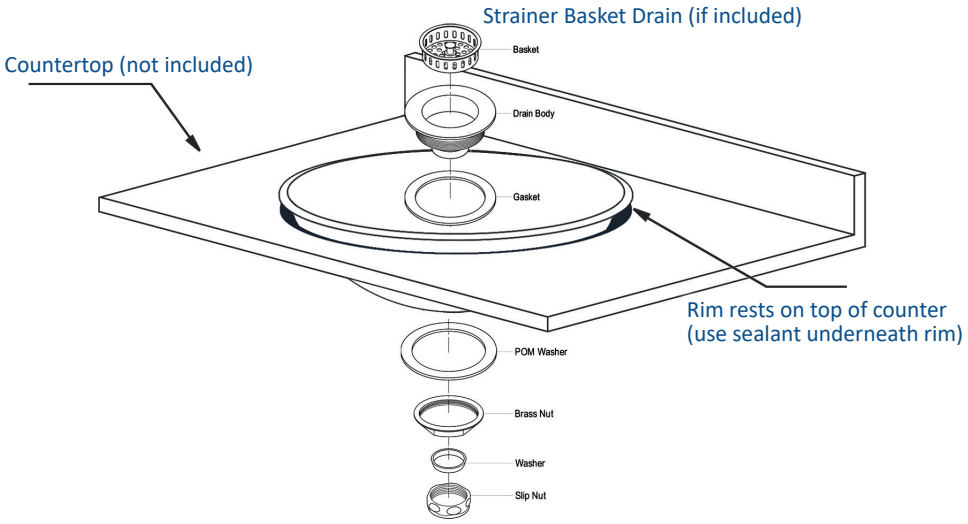


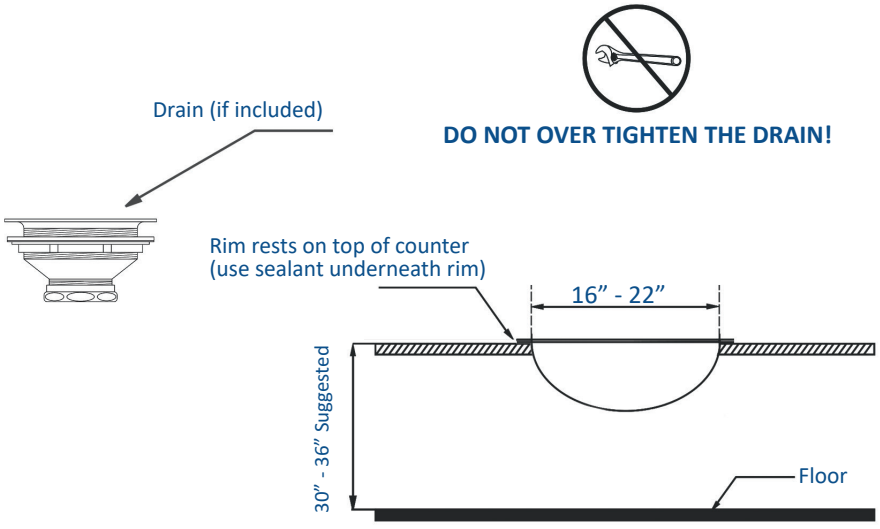


## Steps to Complete Your Project

- **Wipe down** both the sink's rim and the underside of the countertop (undermount) or topside of the countertop (drop-in) where the sink will attach.
- **Before applying** any adhesive, perform a dry fit of the sink and faucet to ensure proper placement.
- **Apply a continuous,** generous bead of silicone or epoxy around the top of the sink's rim (undermount) or around the underside of the sink's rim or the counter top cutout (drop-in).
- **Undermount, raise the sink** into the cabinet and press it firmly up against the underside of the countertop. This creates the initial seal.
- **Drop-In, lower the sink** and carefully place it into the countertop cutout.
- **While holding the sink in placed** use a 2x4 across the countertop and a bar clamp inserted through the drain hole to compress the sink. Place a protective piece of wood under the clamp on the sink's underside to prevent damage. You may also use install brackets or straps.
- **Ensure the sink is properly aligned** and leveled. Then tighten up the clamps, brackets or straps.
- **Use a damp cloth or rag** to wipe away any excess sealant.
- **Allow the silicone or epoxy to cure** completely, which can take up to 24 hours, depending on the product's instructions, to ensure a watertight seal before using the sink.

**After installation,** clean the sink with warm water, mild soap, and a soft cloth. Rinse thoroughly and dry with a fresh soft cloth. To help protect the sink from water spots, and stains, apply either a specialized clear protective coating or copper wax following the products instruction carefully. The best option depends on the level of protection you prefer and the amount of ongoing maintenance you're comfortable with.

## TROUBLESHOOTING TIPS

| Issue | Reason | Solution |
|---|---|---|
| Sink wobbles or is loose | Failed adhesive; Support is inadequate | Reapply high-quality adhesive; Tighten or add brackets |
| Does not completely drain | Drain sits too high; Sealant damn; Clogged P-trap | Re-sit drain below bevel; Remove excess sealant; Clean out P-trap |
| Leakage under sink | Drain has come loose; Sealant not applied properly around flange | Tighten the fastener under the sink; Re-apply sealant around flange |

# CARE AND MAINTENANCE

TCB-002AN CORDOBA with NBPF-115ORB



TCB-003AN SAN SALVADOR

# Copper Bar Sinks

Copper has been used for thousands of years and is easy to maintain since it does not show fingerprints as stainless steel and other metals would. For basic cleaning, simply use a mild soap and water as other cleaners typically are not necessary. Products such as Renaissance Wax or Flitz Wax may be applied to the copper surface periodically to give it lasting protection. These suggested seals will help maintain the luster of the copper and provide better water runoff. Leave the water running while working with acidic foods or pastes to avoid any reaction. To keep copper sinks free of hard water stains simply dry it with a soft cloth after each use.

Copper is a living metal and the patina of our Antique and Natural finishes will all naturally continue to patina over time; meaning they may become a richer, darker color. However, if you would like to keep the copper sink looking like it did when first installed, we recommend waxing the sink every 2-3 months. Our copper sinks are not lacquered or sealed in the manufacturing process and will react to their environment as they develop character. If acidic items such as lemons, ketchup, or red wine sit on these finishes for an extended period of time the finish may be affected, but since copper is a living metal it will heal or re-patina itself over time; often in a matter of days. The beauty of copper is it is ever changing and no two pieces are ever alike giving you a one of a kind work of art!

**Caution** When using copper sinks it is very important not to place extremely hot pots or pans (directly from the stove) on the sink or leave them for extended periods of time as the finish can be temporarily affected.

**Warning** Copper sinks can be harmed using some copper cleaners. Copper cleaners can be abrasive and scratch the surface of the copper sink. Also, do not use corrosives such as chlorine, concentrated vinegar, abrasive cleaners, citric acids like lemon or orange juice, or harsh chemicals as these substances may remove the patina.

**Fight Bacteria with Copper** Science now proves copper kills 99% of bacterial, including bugs like MRSA within two hours of contact. Copper disinfects itself within eight hours of contact versus a stainless steel sink may take up two days with soap and water! Copper ions are soluble in water, where they function at low concentration as bacteriostatic substances and fungicides. For this reason, copper can be used as an anti-germ surface that can add to the anti-bacterial features of your home.



TCB-009AN CAYENNE RIVER with NBPF-115ORB

# FAQs

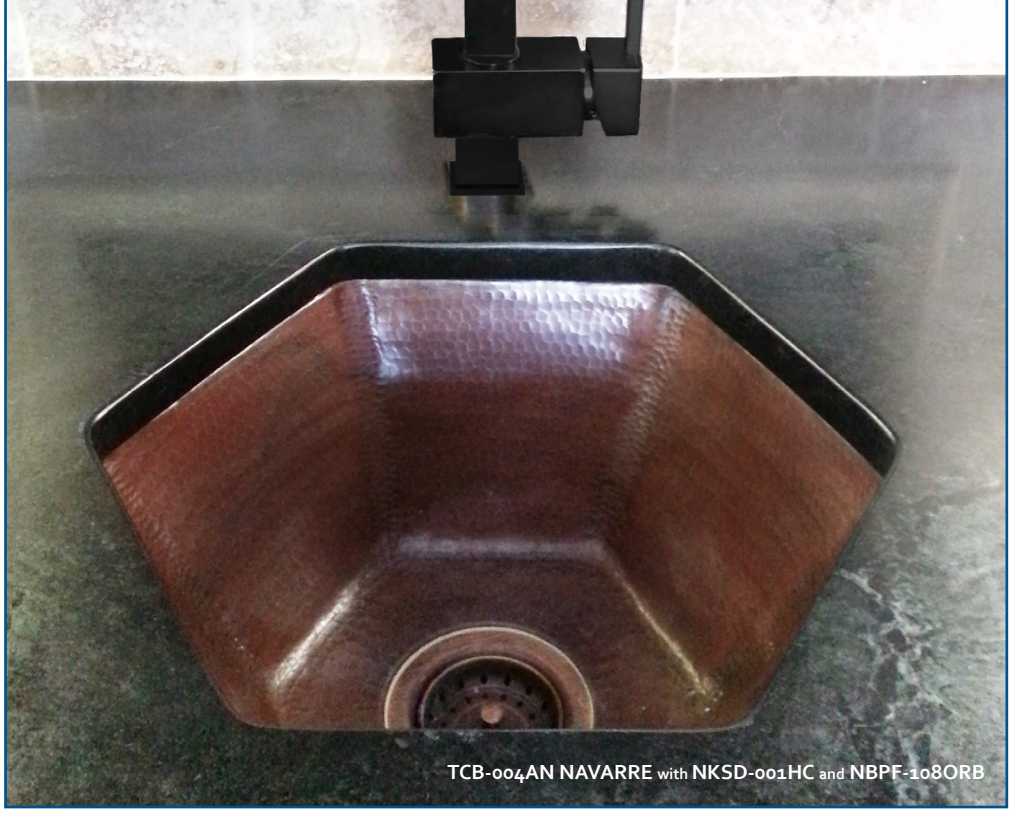

TCB-004AN NAVARRE with NKSD-001HC and NBPF-108ORB

## What is the best way to care for my copper sink?

Copper is amazingly easy to maintain since it does not show fingerprints as stainless steel and other metals do. For basic cleaning, simply use a mild soap and water as other cleaners typically are not necessary. Products such as Renaissance Wax or Flitz Wax may be applied to the copper surface periodically to give it lasting protection.

## Considering these are handmade what differences should I expect?

All our copper sinks are handmade from natural copper so variations in texture, size or color are common. Therefore, **we highly recommend** purchasing the product first and fabricate according.

## What gauge of copper is used in my copper sink?

All of Novatto's copper bar and prep sink collections are all made from 16 gauge copper. The lower the number, the thicker the copper.




## Are there clips included with my copper sink?

Novatto does not provide under-mount sink clips because we can't anticipate the counter material that will be used; mounting clips can be provided by any professional.

## What is Patina or a Living Finish?

Copper's *living finish*, or patina, develops naturally over time, creating a protective layer with rich, weathered tones. This finish not only enhances copper's unique beauty but also provides natural antibacterial benefits. Harsh chemicals like acids, Drano, Soft Scrub, or bleach can strip the patina, leaving the surface shiny. However, the finish will gradually restore itself, returning to warm brown tones and covering spots or scratches.

## Do your copper sinks have overflows?

No, none of our copper sinks have overflow holes.

## Will my copper sink turn color over time?

Because copper is a living material, it naturally darkens or tarnishes over time. This aging process is exactly what makes it so appealing, each change adds character and charm to the piece.

NOVATTO
WHERE STYLE FLOWS

**More questions?** Feel free to contact our technical support team anytime. More info is also available at our website.

Novatto I P: 844.404.4242
support@novatto.com
Novatto.com

# LIMITED LIFETIME WARRANTY

Novatto products have been made under the highest standards of craftsmanship and quality. Due to the natural character of our handcrafted copper products and artisan process, variations in dimensions, color, surface, hue, hammering uniformity and finishes are expected and not considered defects. These variations are more evident in our "natural finish" where some pieces will have variable areas of more black or brown. Novatto offers no warranty with respect to the finishes on the copper products, as the living finishes naturally change over time. Novatto's copper sinks offer a Limited lifetime warranty for up to one (1) year, on defects in workmanship and/or materials for all of our collections when the product was purchased through an authorized Novatto dealer.

Under no circumstance will Novatto be held responsible for any damage as a result during or after product installation. We will not be responsible for any installation or labor charges, freight cost, *lost profit or any other expenses associated with a defective product. Novatto's only responsibility is the exchange or replacement of a defective product. Novatto will not be responsible for product failures due to lack of maintenance. We will not be held responsible for any damage or product failure due to improper installation, misuse, or failure to use a licensed professional. Please read the care and maintenance documentation to determine the limits of proper use.

## Get the most out of your Novatto sink by registering!

**By registering, you are verifying Novatto Limited lifetime warranty. Plus you will receive helpful tips, learn of special events, product information, and so much more.**

If you believe you have a warranty claim, contact Novatto, either through your Plumbing Contractor, Home Center, local Dealer, or by writing: Novatto Inc, Attn.: Product Support, 3533 E. Corona Ave., Phoenix, AZ 85048, USA. Please be sure to provide all pertinent information regarding your claim, including a complete description of the problem, the product, model number, color, finish, the date the product was purchased and from whom the product was purchased. Also include the original sales receipt. For other information email: productsupport@novatto.com.

Novatto makes no implication our products comply with any or all local building or plumbing codes. It is the consumer's responsibility to determine local code compliance. This warranty extends to the original purchaser and first consumer for one (1) year.

Since copper is a living material each piece is unique and one of a kind. Due to the unique handcrafted art of Novatto's copper products, the tolerance in size of our sinks is +/-0.5" and for our bathtubs it is +/-1.0". To be sure Novatto's product fits perfectly in your home; **we recommend purchasing the product first and fabricate according.**

**Warning:** Do not use corrosives such as chlorine, vinegar, abrasive cleaners, copper cleaners, and citric acids like lemon or orange juice, harsh chemicals or anything with ammonia or acid. These substances may remove the patina finish of a copper sink. However, if an acidic product removes some of the patina, do not worry the patina will return over time due to its living properties.

**Need more help?**

Feel free to contact our product support anytime at 844.404.4242 or email us at productsupport@novatto.com. More information is also available at www.Novatto.com.

*Some states, provinces, and nations do not allow the exclusion or limitation of incidental or consequential damages, so the above limitations or exclusions may not apply to you.

# THANK YOU

**We would like to take this opportunity to thank you for choosing Novatto. We hope you are truly satisfied with our product(s) and enjoy it for years to come. As a small business, we learn the most from you, the customer. Please visit the link below and leave us a review with a good, high-resolution image and you could win a $25 Amazon or Visa gift card.**

**It's easy as...**

- **Go to novatto.com**
- **Find your product's page**
- **Scroll 1/2 way down, on the right click the white button *"Write a review"***
- **Review, submit... enjoy!**

NOVATTO
WHERE STYLE FLOWS

**Novatto I P: 844.404.4242**
**support@novatto.com**
**Novatto.com**