specifications

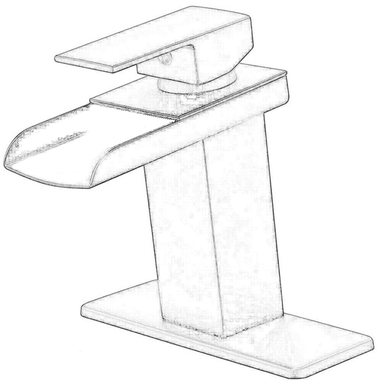

Single-handle Lavatory Faucet

NOTE : THIS FAUCET IS DESIGNED TO BE INSTALLED THRU 1 HOLE / 3 HOLES.

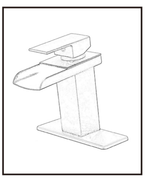

Submitted Model No.: 6009

Specific Features:

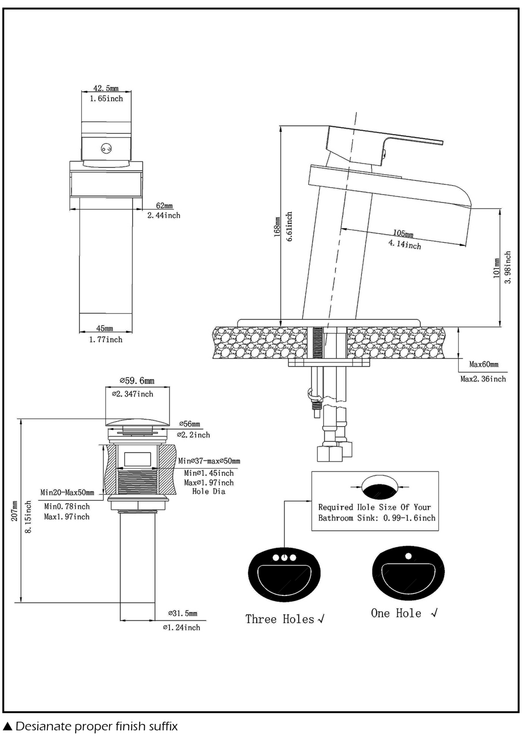

▲ Desianate proper finish suffix

BWE
BEST WATER EXPERIENCE

BATHROOM FAUCET

■ Best Water Experience

Notes before installation:

1. Please check that all components are present.
2. Before installation ensure that all feed lines are clear of debris and on / off valve is present.
3. Ensure water pressure is between 20-125 PSI (includes combination of hot and cold feed lines).
4. Pictures in the manual are general in content and may not represent exactly your purchased faucet. If you are having difficulties please contact a professional plumber.
5. If you will be away from home for an extended period you should shut off the main water supply.

Daily maintenance:

1. Use a soft cloth and vinegar to remove hard-water spots.
2. Check aerator (if present) regularly for calcium build up are when water stream is not optimum.
3. DO NOT use caustic cleaning products as the use will break down finish and will void the product warranty.
4. Acceptable cleaners include vinegar or mild non-abrasive liquid detergents.
5. If the water pressure appears to be less than optimum remove, inspect,clean or replace aerator.

1. Remove the rubber washer , metal washer and locking nut from the faucet.
2. Screw and hand tighten the hot and cold flexible hoses to the faucet . DO NOT use a wrench to tighten hoses as this may damage the hose and / or the hose threads.
3. Install faucet through center hole.
4. Re-install the rubber washer followed by the metal washer and lock-nut. Hand tighten then tighten further using a screw driver to tighten lock-nut screws.

1-1 Installation Sketch

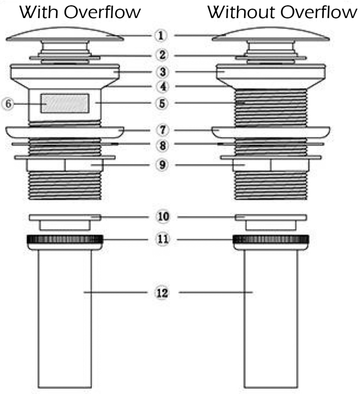

① Drain Cap
② Silicon Gasket
③ Sponge Gasket
④ Silicon Gasket
⑤ Drain Bod
⑥ Overflow
⑦ Silicon Gasket
⑧ Plastic Washer
⑨ Brass Locking Nut
⑩ Rubber Ggsket
⑪ Locking Nut
⑫ Tail Pipe

1-2 Installation Steps

Vessel Sink / Drain Installation (Overflow)

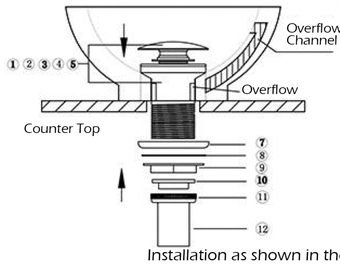

Installation as shown in the figure

Vessel Sink / Drain Installation (non-overflow)

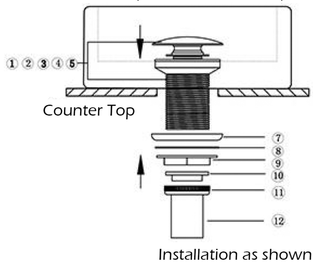

Installation as shown in the figure