6-Shelf Storage Unit

Parts List

A	6 x	D	4 x	
B	48 x	F	1 x	G 1 x
C	4 x	H	1 x	

Instructions

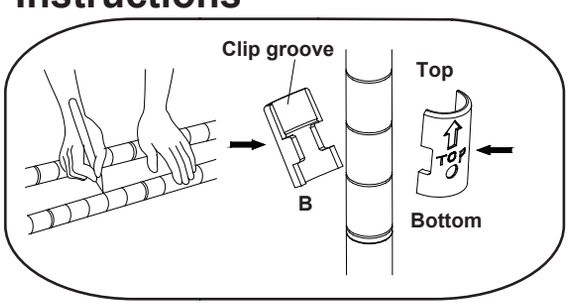

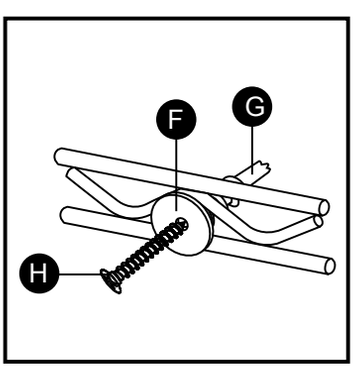
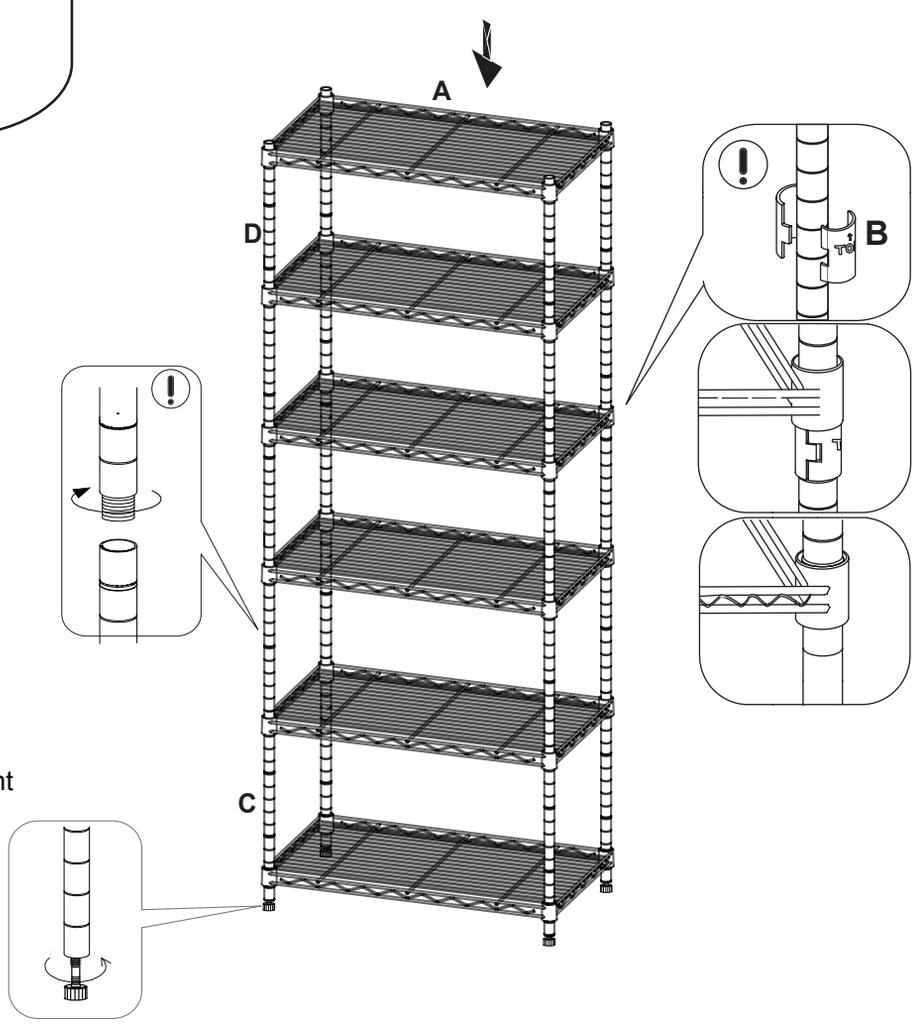
Fix to wall to prevent tipping over
Screw anchor (G) in wall at the height of the top shelf.