36" Under-Cabinet Wall Hood

500 Series – Stainless Steel DUH56353UC



DUH56353UC
Stainless Steel

500 Series under-cabinet hoods are the perfect option for smaller kitchens and limited spaces. 36" wall installation, typically under cabinets.

Features & Benefits

- Touch control to adjust the performance of your hood to match your cooking style.
- Dishwasher-safe multi-layer filters to efficiently remove grease and other solid particles out of the extracted air.
- LED lighting illuminates the cooking area efficiently.
- 300 CFM and converts to recirculation mode with the right accessory.

General Properties	
Operating mode	Convertible: ducted / recirculating
CFM (blower)	300 CFM
Number of speed settings	3-stage
Motor location	Integrated motor in hood body
Number of lights	2
Bulb type	LED
Light lumens	300
Light color	3500 K
Total power of the lamps	3.2 W
Damper included	Yes
Grease filter material	Aluminum
Grease filter type	Multilayer cassette
Technical Details	
Watts	230 W
Volts	120 V
Frequency	60 Hz
Plug type	No plug

Dimensions & Weight	
Overall appliance dimensions (width of canopy included) (HxWxD)	5" x 36" x 21"
Minimum distance above cooktop / range cooking surface	Min. 24" Electric / Min. 30" Gas
Diameter of air duct top	7"
Diameter of air duct back	3 1/4" x 10" Rectangular
Net weight	26 lbs
Accessories – Optional	
Replacement charcoal filter	HEZVEUD361



Accessories: To purchase Bosch accessories, cleaners & parts please visit www.bosch-home.com/us/store or call 1-800-944-2904 (Mon to Fri 5 am to 6 pm PST, Sat 6 am to 3 pm PST).

Notes: All height, width and depth dimensions are shown in inches. BSH reserves the absolute and unrestricted right to change product materials and specifications, at any time, without notice. Consult the product's installation instructions for final dimensional data and other details prior to making cutout.

Warranties: Please see Use & Care manual or Bosch website for statement of limited warranty.

For more information on our entire line of products, go to www.bosch-home.com/us or call 1-800-944-2904

© BSH Home Appliances Corporation. All rights reserved. Bosch is a registered trademark of Robert Bosch GmbH.

36" Under-Cabinet Wall Hood

500 Series – Stainless Steel DUH56353UC

Installation Details

Exhaust	Duct Size	Pressure (in. H2O)		Power (W)		CFM		Sones	
		High Speed	Working Speed	High Speed	Working Speed	High Speed	Working Speed	High Speed	Working Speed
Vertical – Rectangular	3.25" x 10"	0.1	0.031	62.3	28.6	240	130	6.0	1.5
Horizontal – Rectangular	3.25" x 10"	0.1	0.027	62.9	28.7	240	110	6.0	1.5
Round – Vertical	7"	0.1	0.033	61.7	28.7	260	140	5.5	2.0

Installation Details

Measurements in inches (mm)

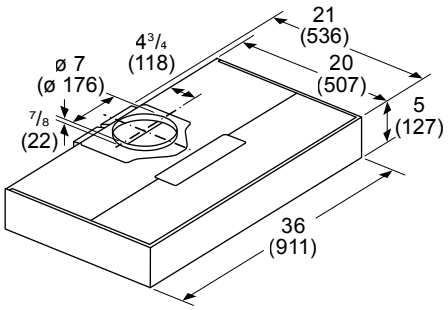

Accessories: To purchase Bosch accessories, cleaners & parts please visit www.bosch-home.com/us/store or call 1-800-944-2904 (Mon to Fri 5 am to 6 pm PST, Sat 6 am to 3 pm PST).

Notes: All height, width and depth dimensions are shown in inches. BSH reserves the absolute and unrestricted right to change product materials and specifications, at any time, without notice. Consult the product's installation instructions for final dimensional data and other details prior to making cutout.

Warranties: Please see Use & Care manual or Bosch website for statement of limited warranty.

For more information on our entire line of products, go to www.bosch-home.com/us or call 1-800-944-2904

© BSH Home Appliances Corporation. All rights reserved. Bosch is a registered trademark of Robert Bosch GmbH.