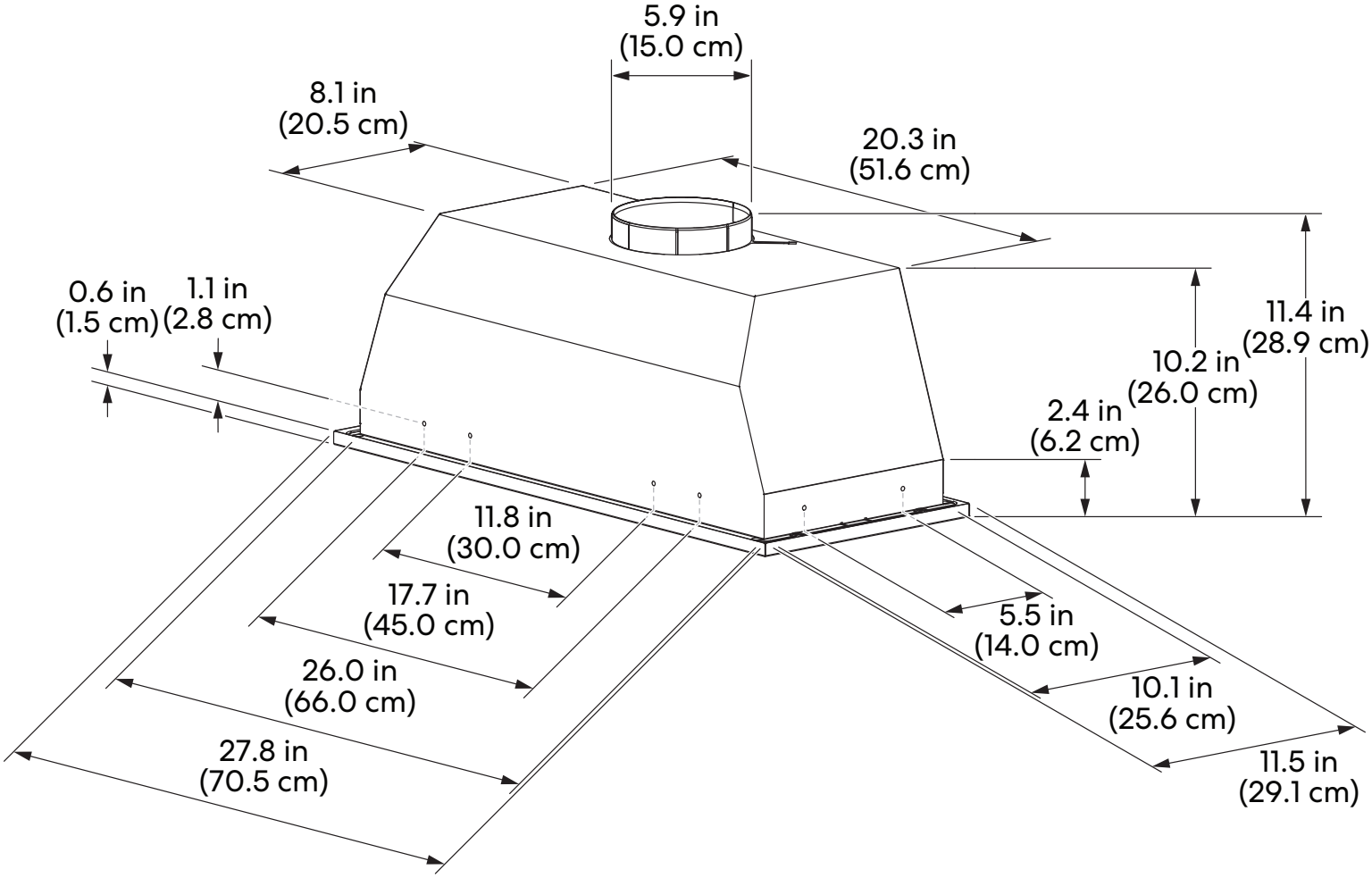
5.9 in
(15.0 cm)
8.1 in
(20.5 cm)
20.3 in
(51.6 cm)
0.6 in
(1.5 cm)
1.1 in
(2.8 cm)
11.4 in
(28.9 cm)
10.2 in
(26.0 cm)
2.4 in
(6.2 cm)
11.8 in
(30.0 cm)
17.7 in
(45.0 cm)
26.0 in
(66.0 cm)
27.8 in
(70.5 cm)
5.5 in
(14.0 cm)
10.1 in
(25.6 cm)
11.5 in
(29.1 cm)