Installation Manual of Trim Kit

for EF262-265

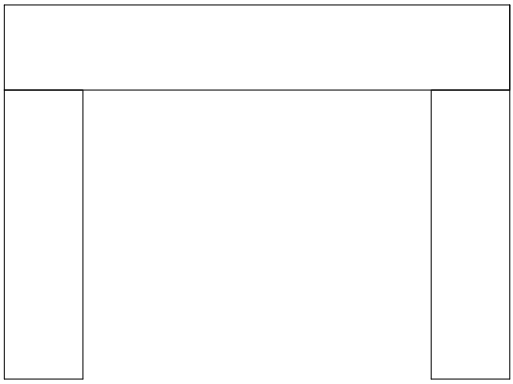

DO NOT RETURN!

Contact our customer service team for help first.

Call: 949-385-6588

E-mail: service5@fireandfireplaceservice.com

SAVE THESE INSTRUCTIONS FOR FUTURE REFERENCE.

CONTENT

1. PRODUCT DIMENSIONS 1
2. PARTS LIST 2
3. INSTALLATION 3

1. PRODUCT DIMENSIONS

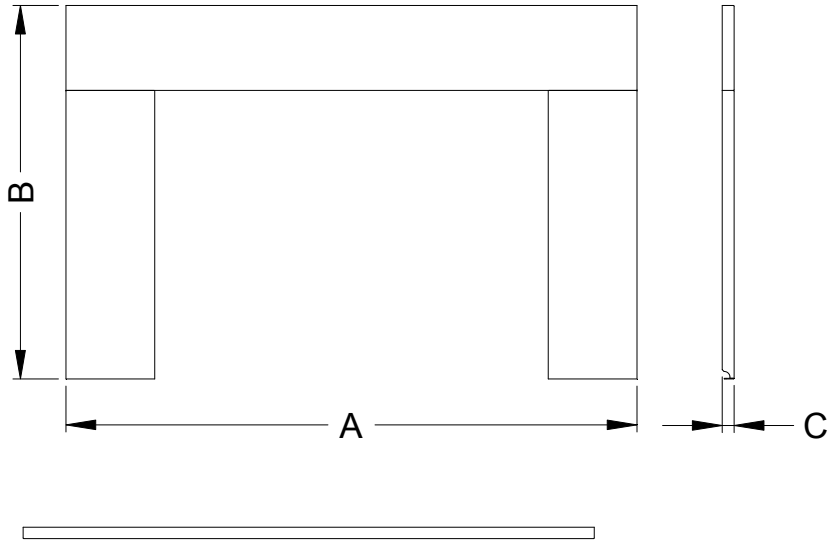

Trim Kit for	Unit	A	B	C
EF262	mm	958	655	20
	inches	37 23/32	25 25/32	25/32
EF263	mm	1009	731	20
	inches	39 23/32	28 25/32	25/32
EF264	mm	1111	778	20
	inches	43 47/64	30 5/8	25/32
EF265	mm	1212	778	20
	inches	47 23/32	30 5/8	25/32

2. PARTS LIST

A. 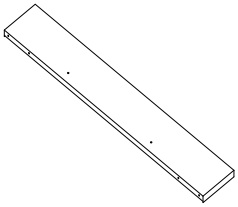 Top Panel (1pc)	B. 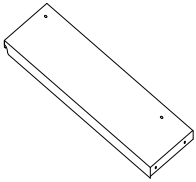 Right Panel (1pc)	C. 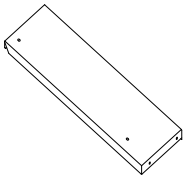 Left Panel (1pc)
D.  Screw ST4*8 (6pcs)	E. 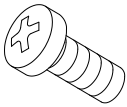 Screw M4*10 (4pcs)	F. 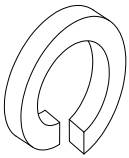 Spring Washer (4pcs)
G. 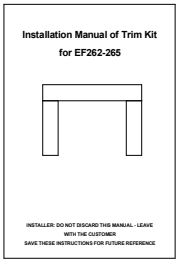 Instruction Manual (1pc)		

3. INSTALLATION

Tools Required

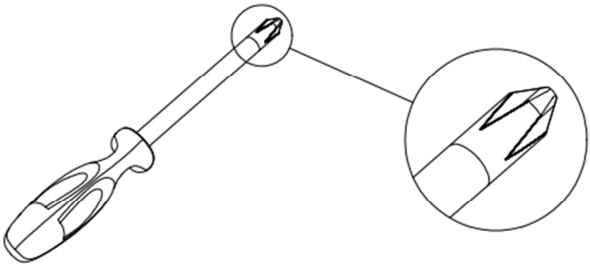

STEP 1

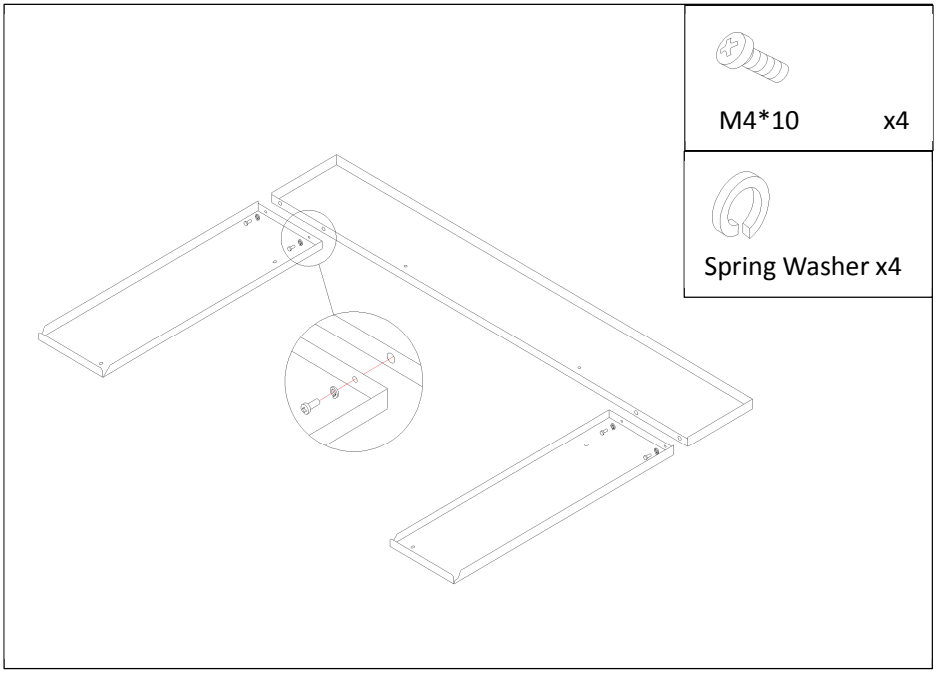

STEP 2

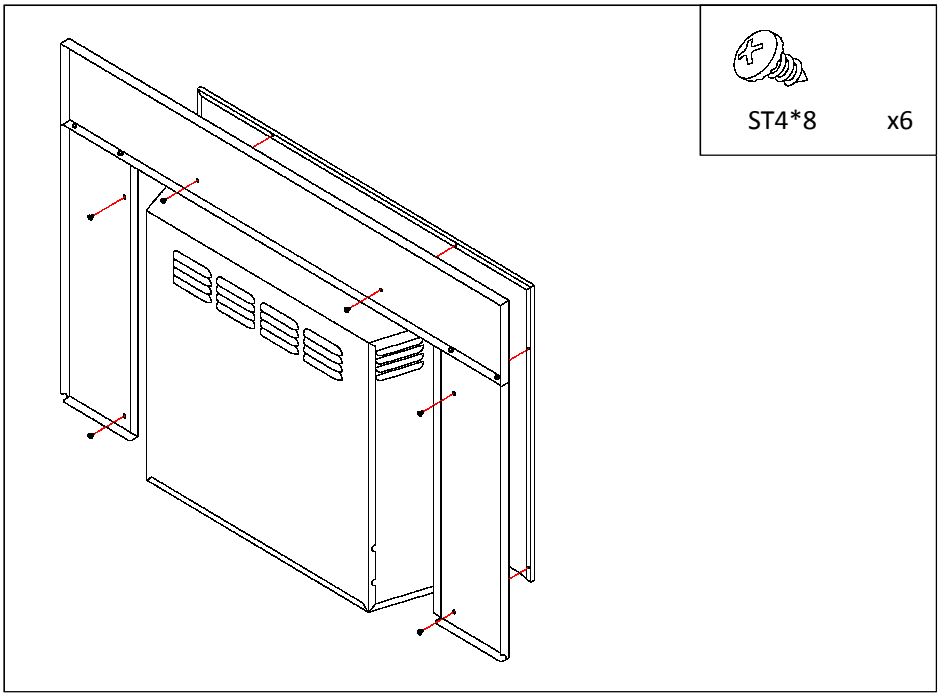

Legend Flame Group LLC

Address: 92 Corporate Park, Ste. C655 Irvine, CA 92606, United States

3.EF.262.05.021 A0 LF