StyleWell™

Item # XDL1008 - BED
Model # 1004126460/1004126463

USE AND CARE GUIDE

Handale Upholstered Mid Century Bed- King

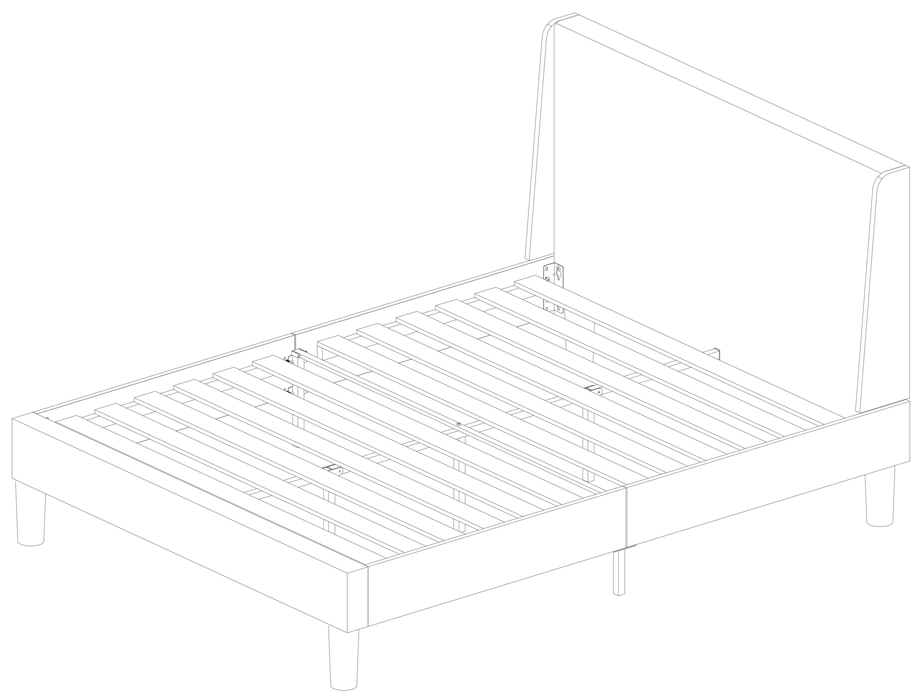

Questions, problems, missing parts?
Before returning to the store, call Customer Service.
8 a.m. - 7 p.m., EST, Monday - Friday, 9 a.m. - 6 p.m., EST, Saturday

1-877-527-0313

HOMEDEPOT.COM

THANK YOU

We appreciate the trust and confidence you have placed in Style Well through the purchase of this Handale Upholstered Mid Century Bed- King . We strive to continually create quality products designed to enhance your home. Visit us online to see our full line of products available for your home improvement needs. Thank you for choosing Style Well!

Table of Contents

Table of Contents 2
Safety Information 2
Warranty 2
1 Year Warranty 2
What is Covered 2
What is Not Covered 2
Pre-assembly 3
Planning Assembly 3
Tools Required 3
Hardware Included 3
Pre-assembly (continued) 4
Package Contents 4
Assembly 5
Maintenance 11
Care and Cleaning 12

Safety Information

DANGER

- Keep small parts away from children during assembly.
- Read and follow instructions carefully.

WARNING

- TO GUARANTEE THE SAFE USE OF THIS PRODUCT, FOLLOW THE WARNINGS, GUIDELINES AND RECOMMENDATIONS IN THIS MANUAL.
- Adult assembly required.
- Small parts may present choking hazard prior to assembly.

CAUTION

- Do not use power tools to assemble your furniture. Power tools may strip or damage parts/product.
- Do not overtighten connectors (screws, bolts, etc.). Overtightening can lead to product damage.
- Be sure to check all packing materials carefully for small parts that may have come loose inside the carton during shipment. If parts are missing, contact THE HOME DEPOT to obtain any missing parts.
- DO NOT USE SUBSTITUTE PARTS.
- This product should only be used on a flat, level surface.
- Read these instructions carefully and retain them for future use. If this product is passed to a third party, then these instructions must be included.
- Assembly requires two people; assembly alone may cause injury.
- Before using the product be sure that it is completely and properly assembled.
- During assembly children should be kept away from the product to avoid possible risk of injury.
- Regularly check screws to ensure they are tightened securely .

Warranty

1 YEAR WARRANTY

WHAT IS COVERED

We guarantee this product to be free of manufacturing defects to the original purchaser for one year.

WHAT IS NOT COVERED

This warranty does not cover commercial use, acts of nature, and abusive use.

Pre-assembly

PLANNING ASSEMBLY

- Remove all Packaging materials , staples and packing straps from the carton .
- Refer to Parts List and Hardware List , and ensure parts and hardware are correct before assembly .
- Contact customer service for missing parts .
- Place all wooden parts on a clean , flat , and soft surface (e.g.carpet or rug) to prevent scratch and damage to parts .

TOOLS REQUIRED

Safety goggles

Level

HARDWARE INCLUDED

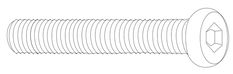

AA

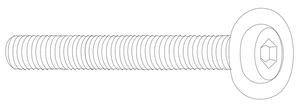

BB

CC

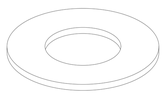

DD

Part	Description	Quantity
AA	Screws	4
BB	Screws	1
CC	Allen Key	1
DD	Washer	3

Pre-assembly (continued)

PACKAGE CONTENTS

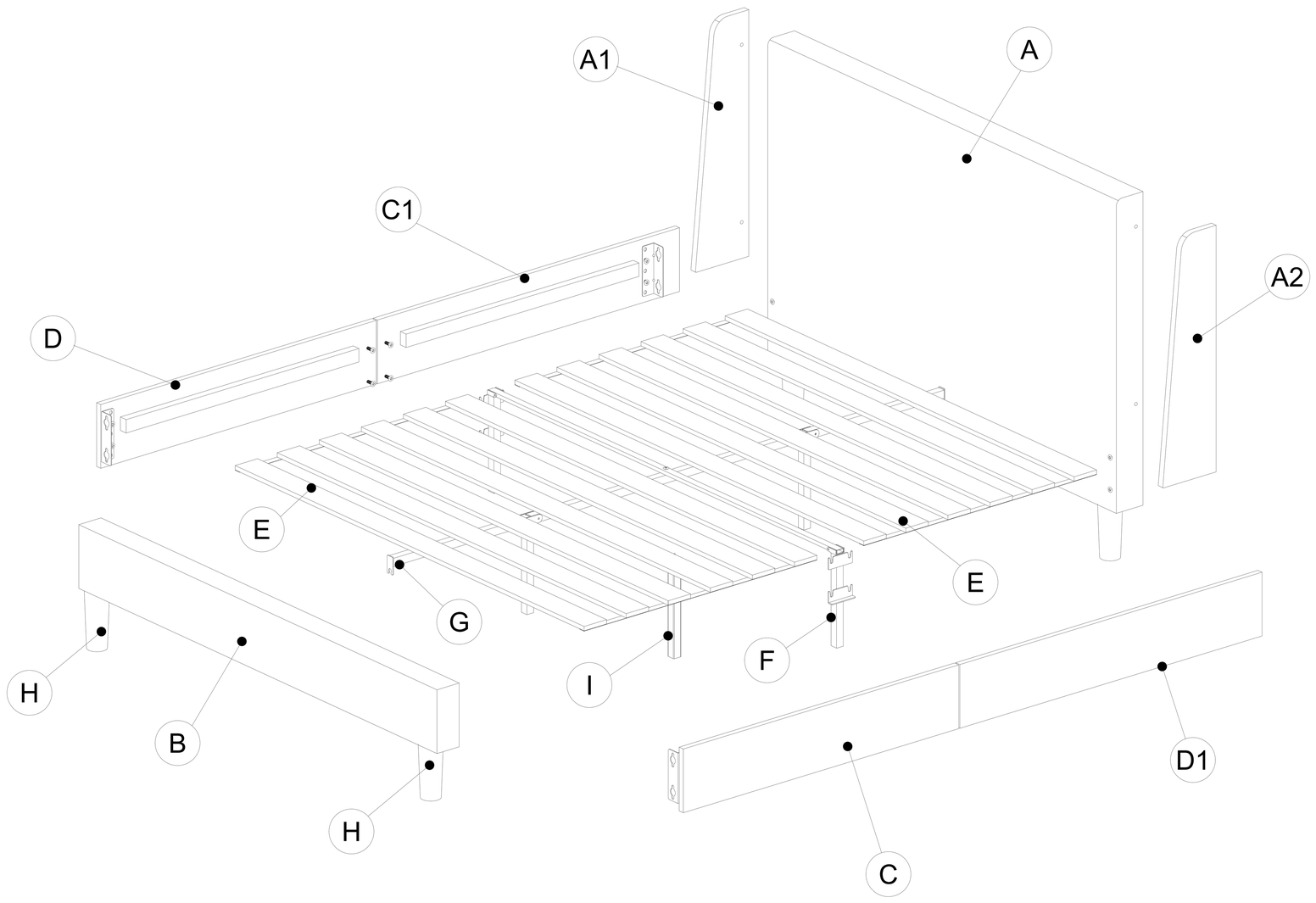

Part	Description	Quantity
A	Headboard	1
A1	Left Ear	1
A2	Right Ear	1
B	Footboard	1
C	bed frame	1
C1	bed frame	1
D	bed frame	1
D1	bed frame	1
E	Wood slats	2
F	Horizontal metal support	1
G	Middle metal support	1
H	Wood legs	4
I	Metal legs	1

Assembly

1 **Attach wood legs (H) to headboard (A) and footboard (B). Loose the middle screws of the headboard(A) and the footboard(B) and add a washer(DD) separately.**

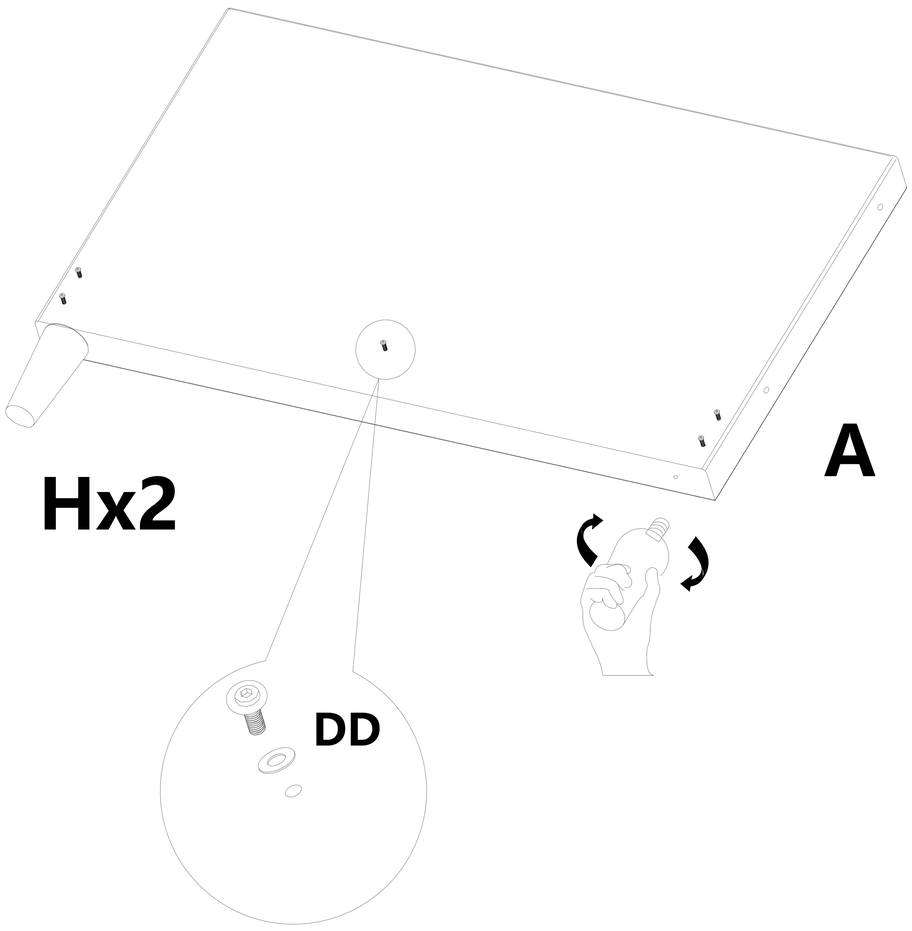

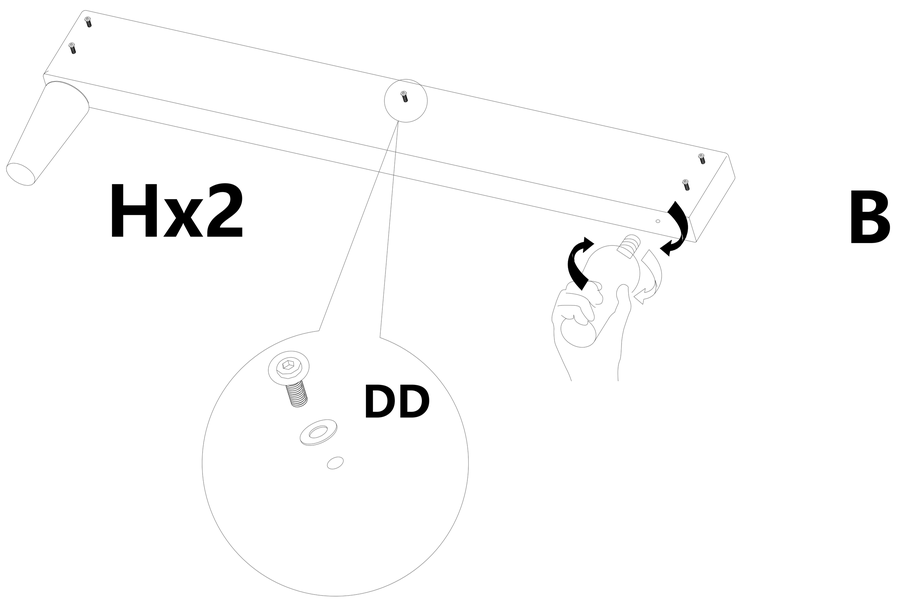

2 **Open middle metal support(G) and horizontal metal support(F).**

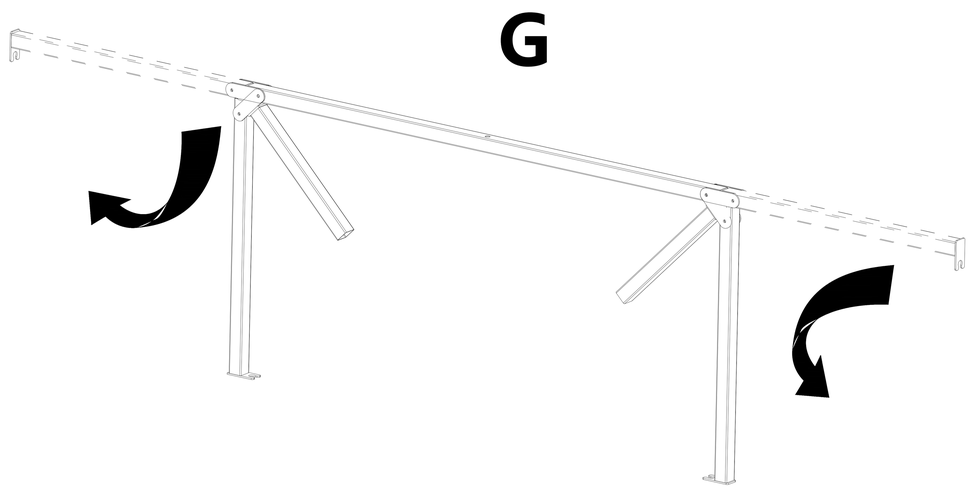

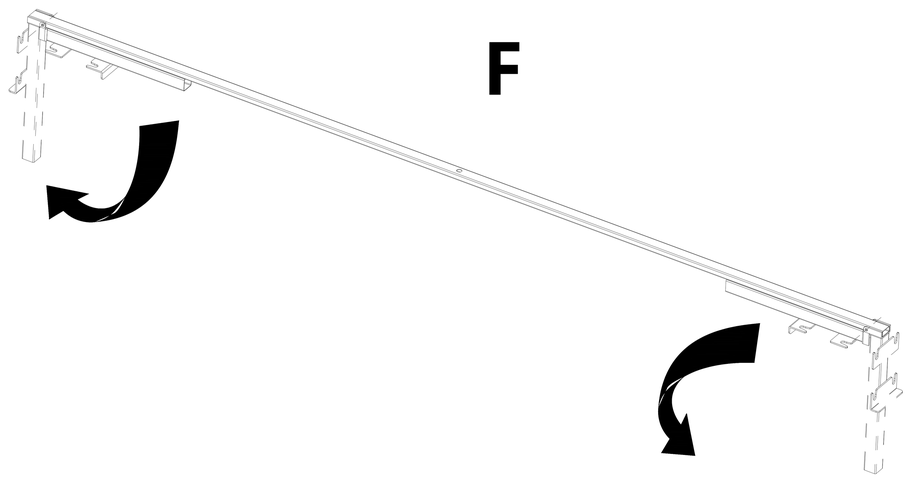

3 **Use the Allen key (CC) to hold on the middle metal support (G) and the horizontal metal support (F) together with the screws (BB) and Washer (DD)**

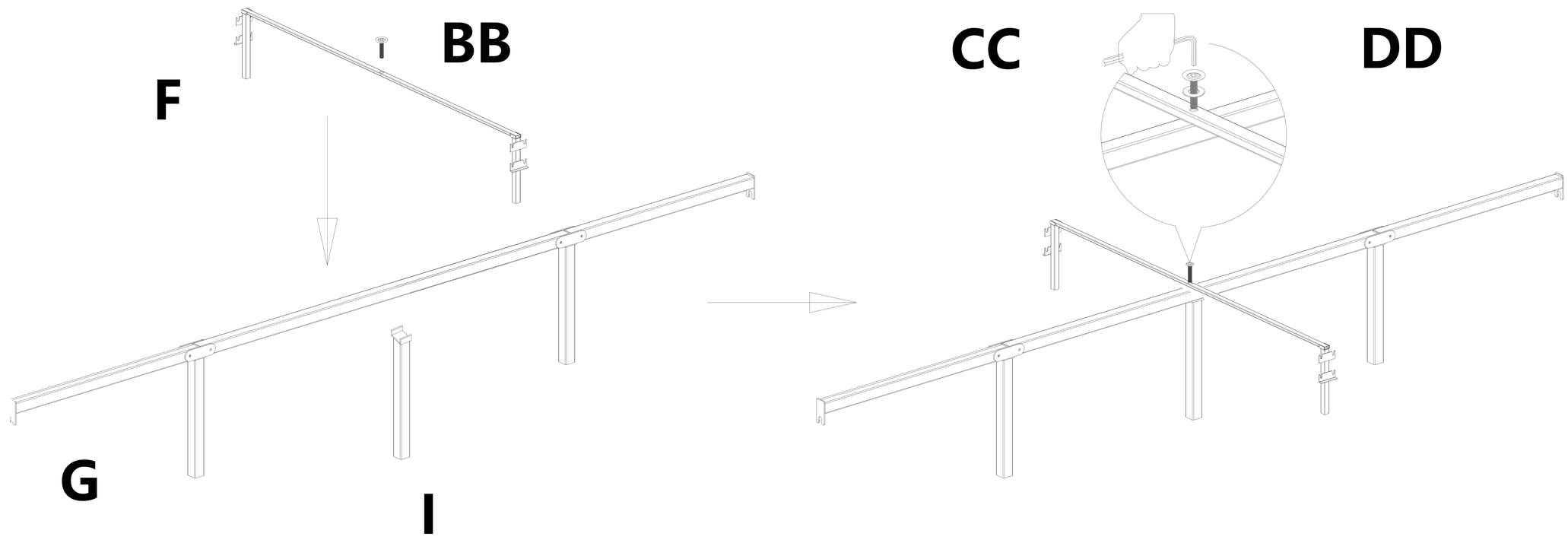

4 **Loosen all screws on headboard(A), footboard(B) and bed frame(C)(C1)(D)(D1).**

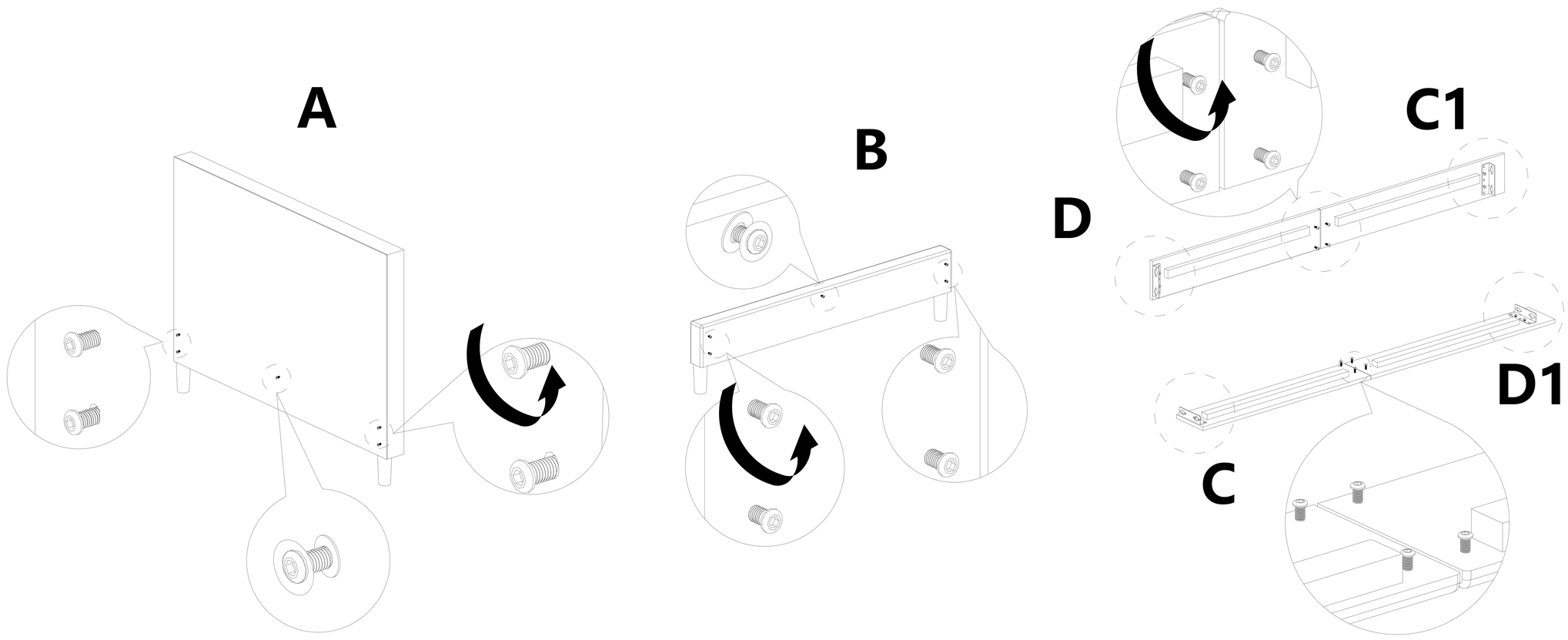

5 **Attach middle metal support(G) to headboard(A) and footboard(B) with screws.**

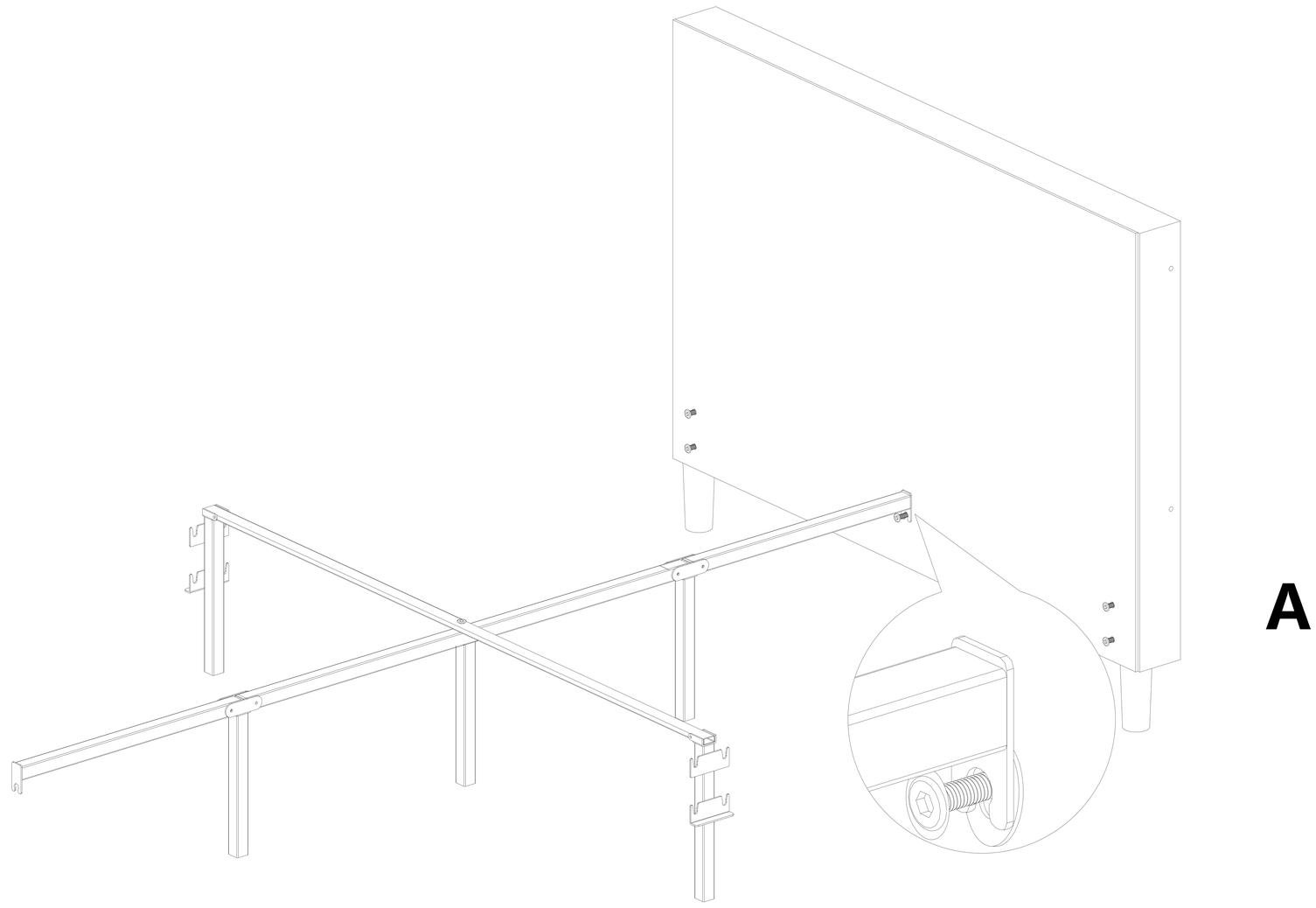

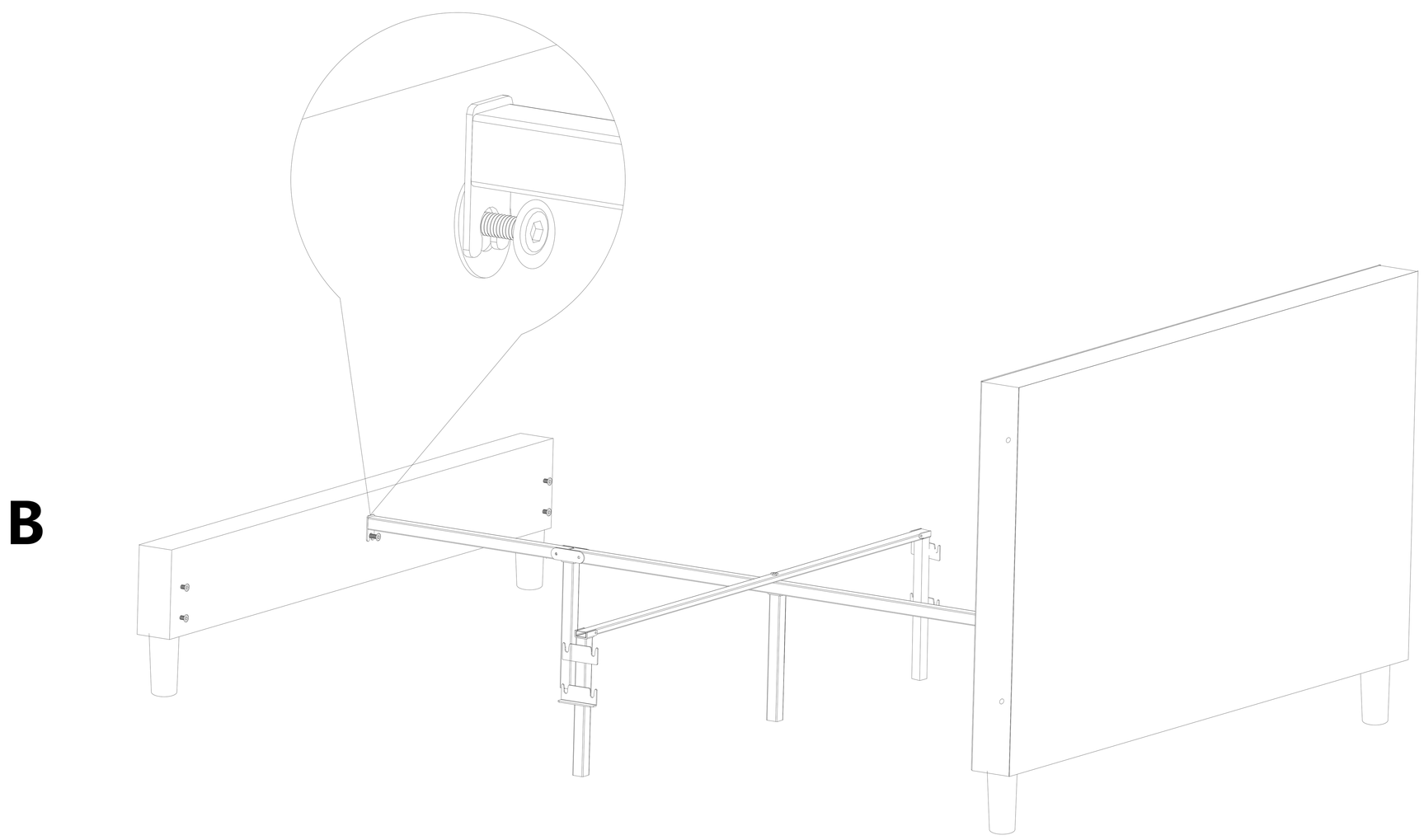

Note：The metal part of Middle metal support(G) will between the washer（DD） and screw.

6 **Put bed frames(C)(C1)(D)(D1) to the brackets of horizontal metal support(F) and tighten the screws.**

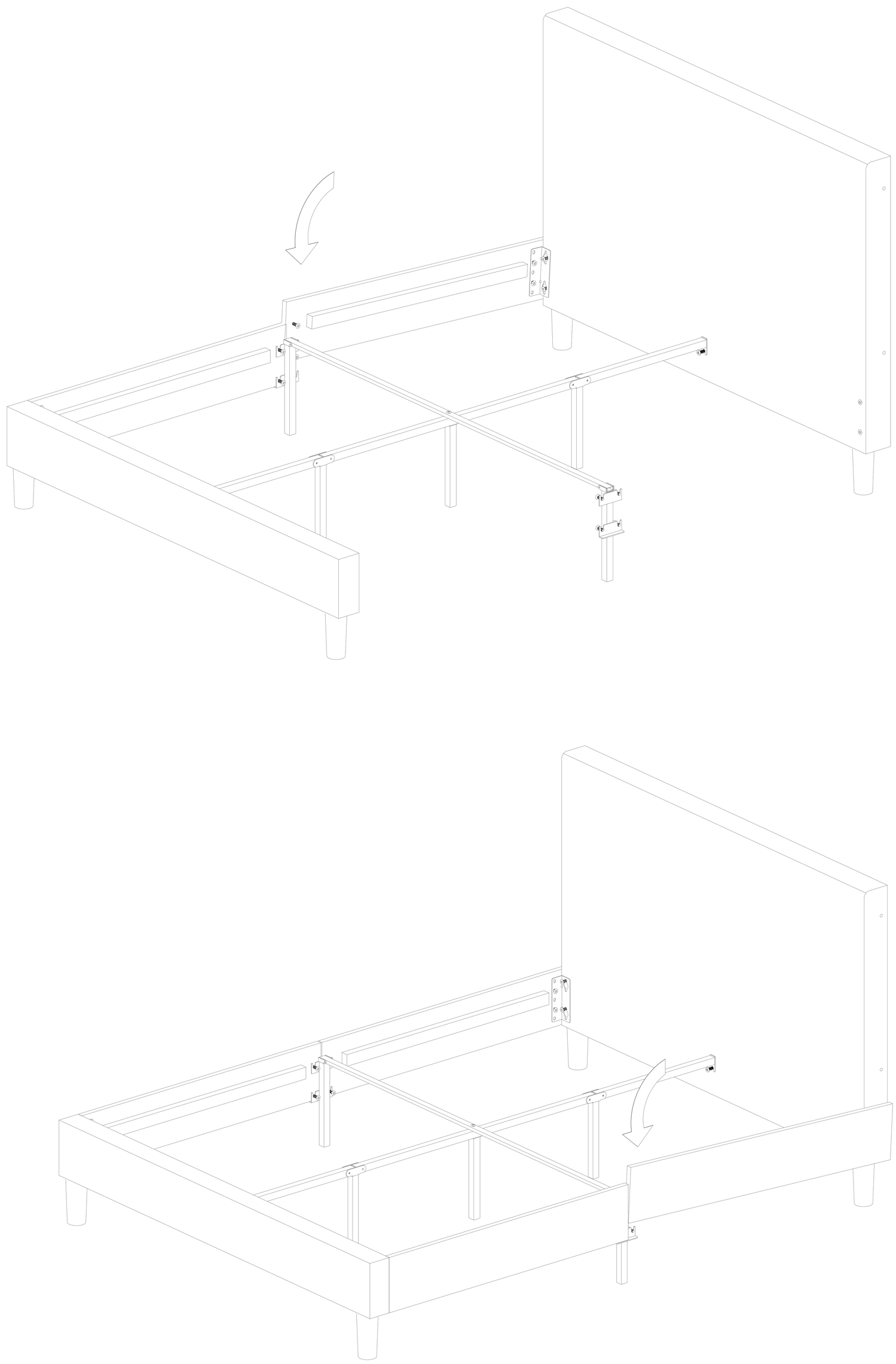

7 **Attached left ear (A1) and right ear (A2) to headboard (A) with screws (AA) by allen key (CC).**

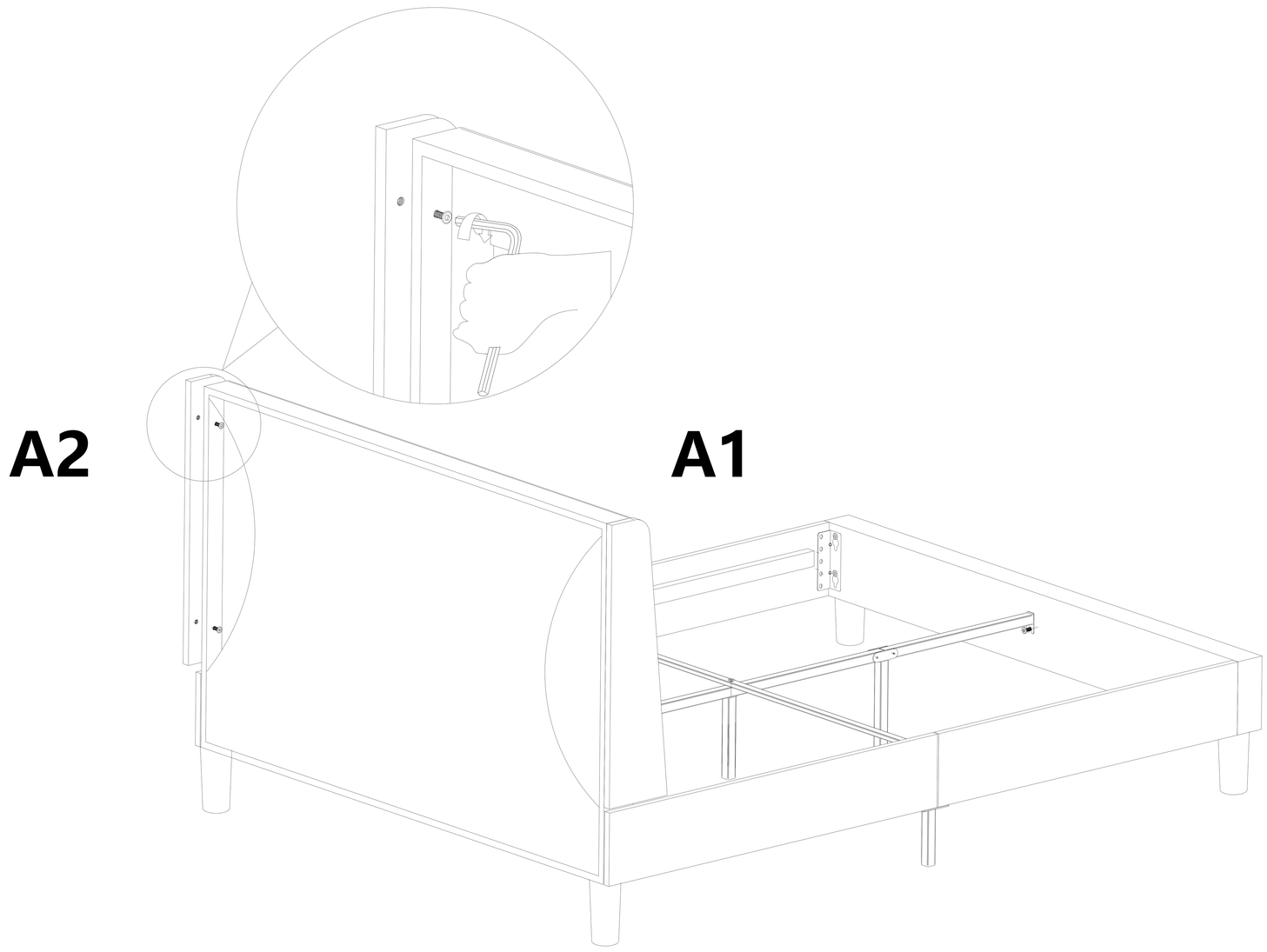

8 **Tighten all screws**

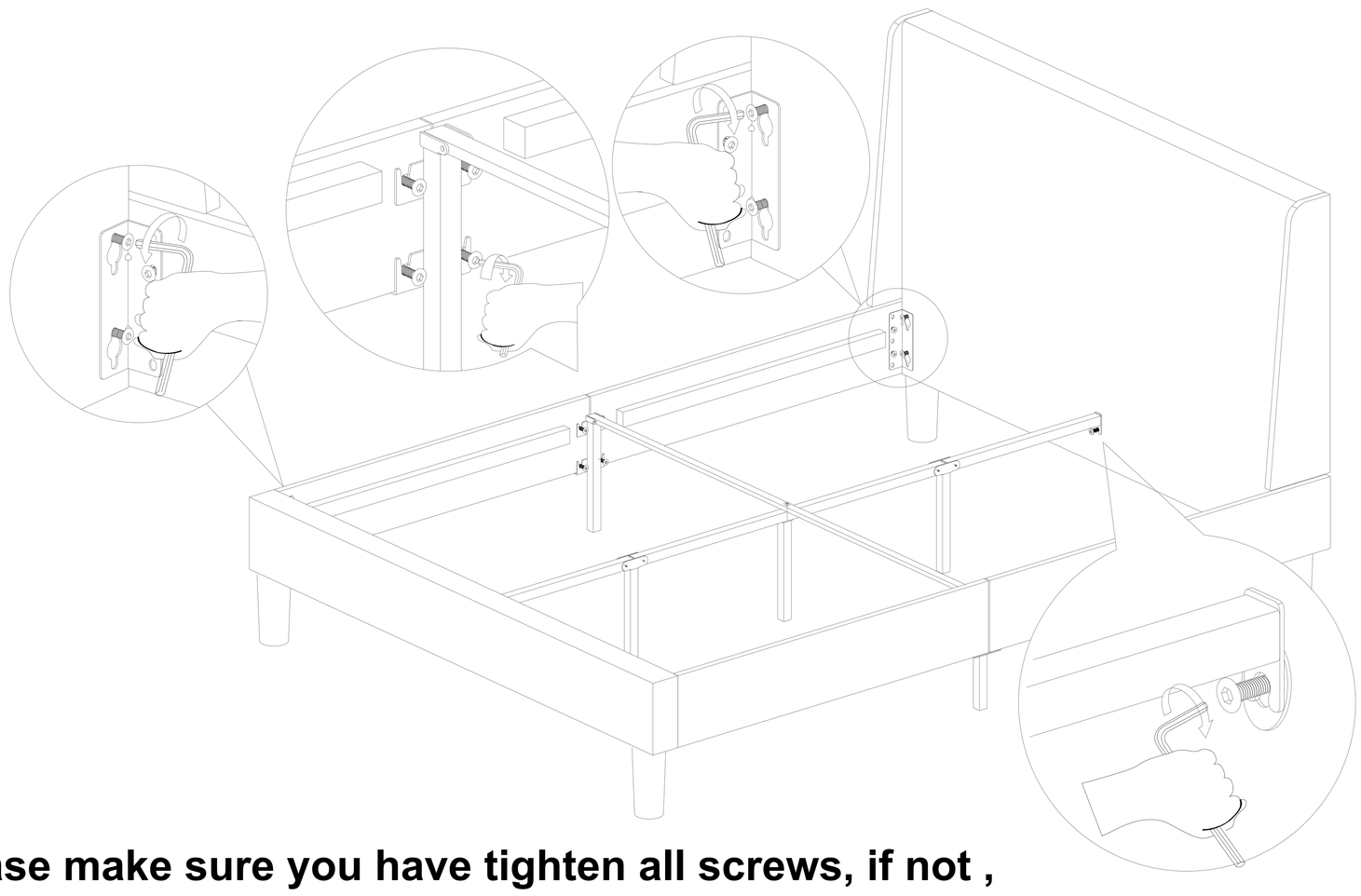

Note：please make sure you have tighten all screws, if not , the bed frame will unstable and damage easier.

9 **Position the wood slats(E) on bed frames.**

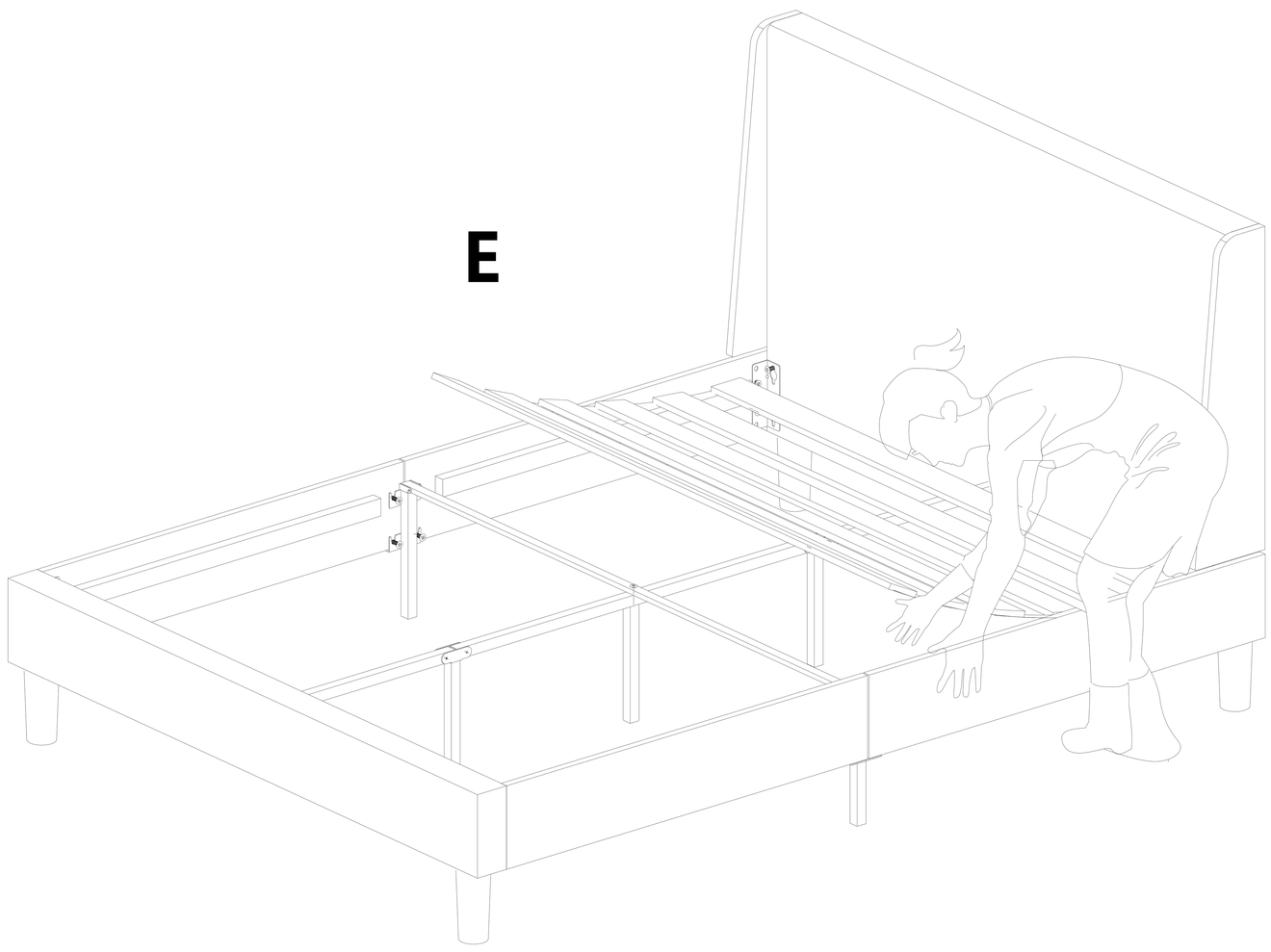

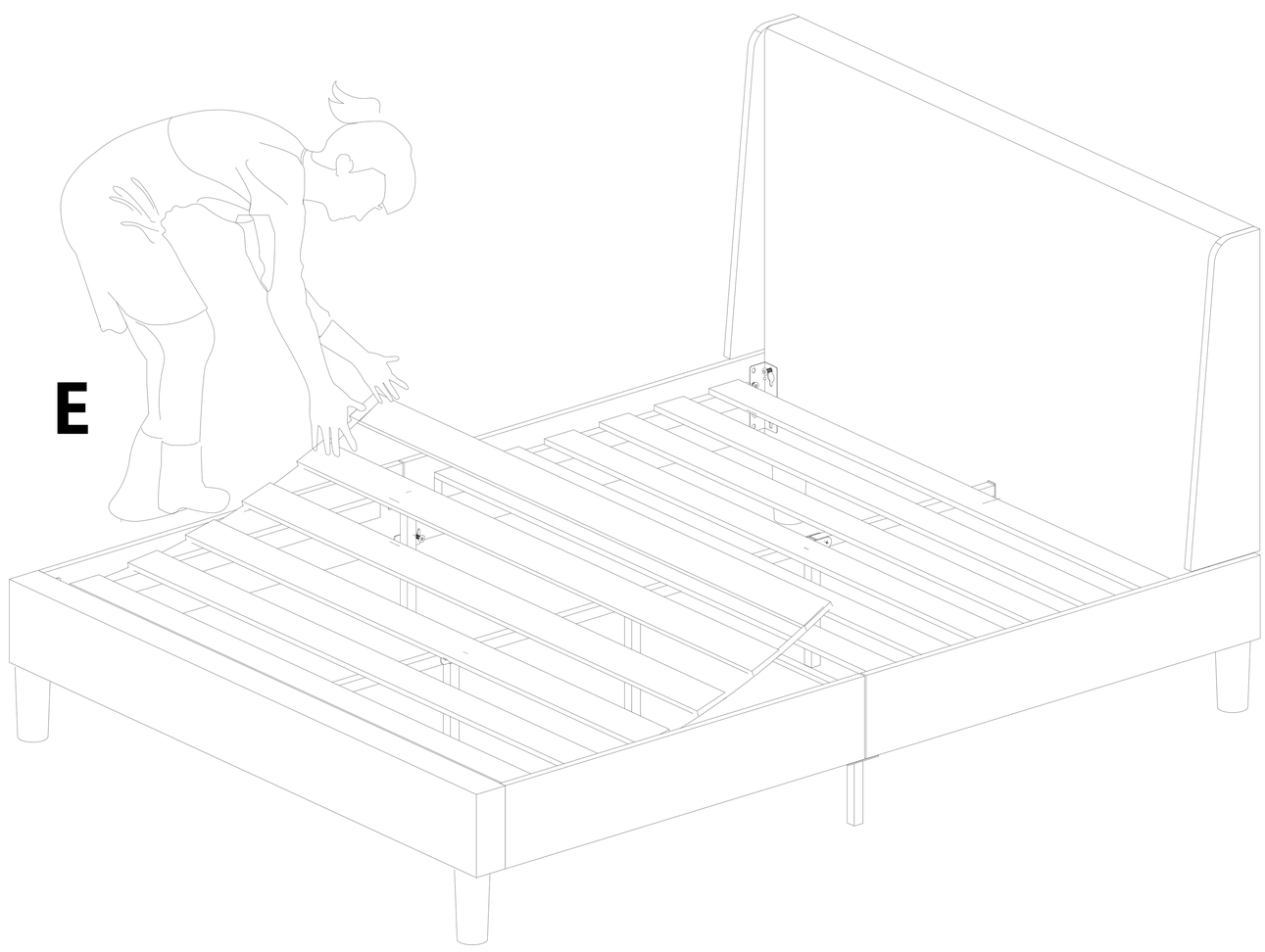

Maintenance

- Keep the product away from direct heat and sunlight .
- Prolonged exposure to heat sources may cause scorching, or even cause color to fade .
- Regular vacuuming or light brushing helps to remove dirt and prevent soil build-up, which increases the appearance of wear .
- Periodically (every 90 days) make sure that the screws are fully tightened .

Care and Cleaning

- Handle with care.
- Use a slightly damp cloth to clean the product. Do not use bleach or use abrasive cleaning material .
- Check all the fittings periodically and re-tighten as necessary. Do not us the product if any of the parts are damaged or broken .
- Never allow any kind of liquid to remain on your furniture .
- Absorption can make wood wrap or delaminate .
- Do not place hot items (e.g. hot drinks) directly onto the wood surface.
- Do not drag and /or pull the furniture .
- Never use harsh chemicals or solvents on your product as this may damage the metal .
- Marks and stains from pens, crayons and ink markers are difficult to remove. In the event that your products become permanently stained, we recommend that you consult a professional .

StyleWell™

Questions, problems, missing parts?
Before returning to the store, call Customer Service.
8 a.m. - 7 p.m., EST, Monday - Friday, 9 a.m. - 6 p.m., EST, Saturday

1-877-527-0313
HOMEDEPOT.COM

Retain this manual for future