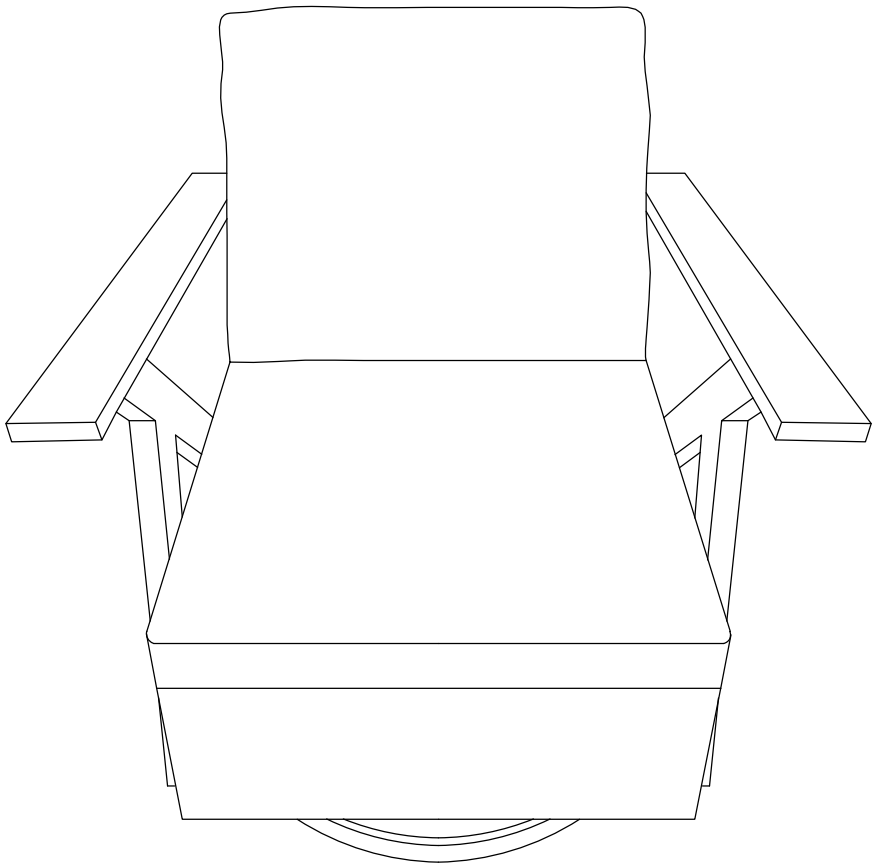

INSTRUCTION MANUAL

SWIVEL CHAIR

IF YOU PURCHASE THE PRODUCT ONLINE AND HAVE ANY QUESTIONS OR CONCERNS PLEASE CONTACT US WITH EMAIL OR TEXT

EMAIL: *slhhomegarden@outlook.com*

TEXT: +1 323-400-0363

Warnings and Cautions

- Please retain this instruction for future usage and read carefully before assembly.
- Make sure you have all the parts & hardware as the item list shows.
- Do not discard any of the packaging until you have checked that you have all the parts.
- All bolts shouldn't be tightened until the complete piece is assembled, which will make the assembly process much easier. Once the piece is fully assembled, then go back and tighten all bolts with the provided tools.
- Check all bolts for tightness before use, and periodically check and tighten bolts to ensure your product works properly.
- Some parts might have sharp edges. Please follow basic safety precautions to reduce the risk of hurt.
- It is essential to place the product on the even ground and not less than 6 feet from any obstruction such as fences, garages, the house, overhanging branches, laundry lines, or electrical wires.
- Keep all kids and pets away from the assembly area. Be careful the parts are not swallowed by pets and kids.
- The product is not to be used for standing and will not function as a stool or step-ladder.
- The product is not a toy. Proper use is for single person seating only.
- Product is tested for use at weight of 350 lbs. Improper use or failure to use as directed may result in injury.
- Not intended for commercial use.

Warranty

Limitation

We are committed to offer a one-year limited warranty on this product.

This warranty covers defects in materials and workmanship under normal use and care for a period of one year from the date of purchase.

Do not Cover

Normal wear and tear, including scratches, stains, fading, or discoloration.

Damage caused by misuse, accidents, neglect, or improper maintenance.

Damages resulting from exposure to extreme weather conditions.

Commercial use of the product.

How to File a Claim

Proof of purchase such as dated receipt or invoice is required.

Include a detailed description of the issue and photos, if applicable.

Contact our customer service team for assistance.

Care and Maintenance

For optimal product performance, we recommend following all below.

- **Stain resistant cushions care:** Keep the cushions in storage on rainy days.
- **Spills:** Immediately wipe up the spill using a white damp cloth. Repeat this step until stain is gone. Allow cushion to air dry.
- **Fabric care:**
  Hand wash with cold water. No dry cleaning.
  Do not use bleach, acid, or other solvents on the fabric.
  Use cold iron compress if necessary.
- **Product care:**
  When not in use, wipe free of any dirt or loose objects.
  Wash with a mild solution of soap and water, rinse thoroughly and dry completely.
- Please inspect and tighten all bolts or fasteners on a regular basis to ensure the proper performance and safety.

Assembly Instructions

A1 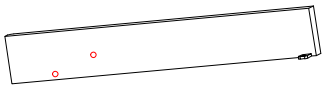 1pc Left Arm	A2 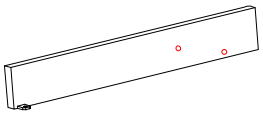 1pc Right Arm	B1 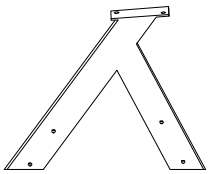 1pc Left Leg	B2 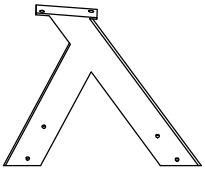 1pc Right Leg
C 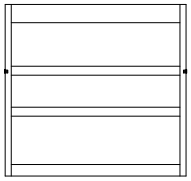 1pc Chair Back	D 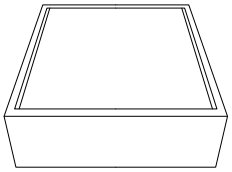 1pc Chair Seat Panel	E 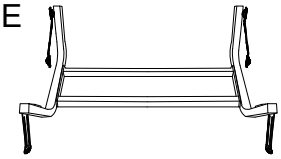 1pc U-Shaped Fitting	F 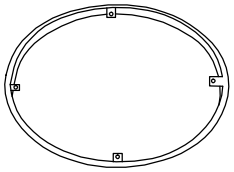 1pc Base
G 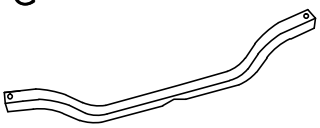 1pc Connecting Rod-Down	H 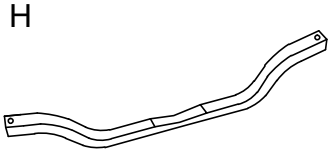 1pc Connecting Rod-Up	I 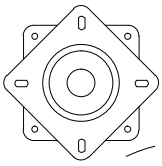 1pc Swivel Plate	J 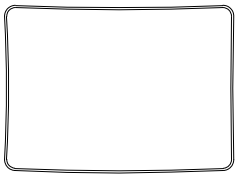 1pc Back Cushion
K 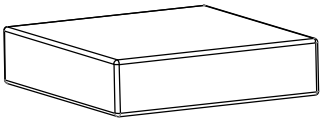 1pc Seat Cushion	L  M6*45mm 2pcs Bolt	M  M6*35mm 16pcs Bolt	N  M6*20mm 10pcs Bolt
O 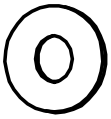 Ø18*Ø6.5*2mm 36pcs Washer	P 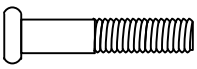 Ø9.5*24*M6 4pcs Bolt	Q 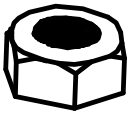 8pcs M6 Nut	R  8pcs Spring Washer
S  1pc Allen Wrench	T 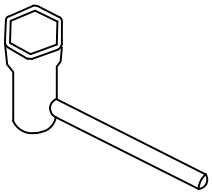 1pc M6 Socket Wrench		

STEP 1 Secure the chair left leg (B1) to left arm (A1) with 2 bolts (N) and 2 washers (O) by using Allen Wrench (S). Keep the bolts loose.

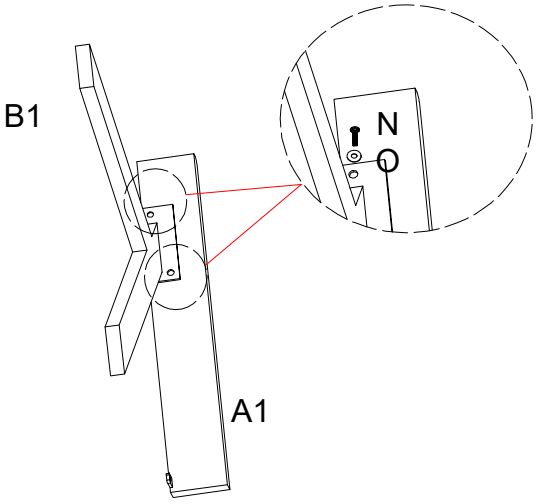

N		M6*20mm	2
O		Washer	2

STEP 2 Secure chair right leg (B2) to right Arm (A2) with 2 bolts (N) and 2 washers (O) by using Allen Wrench (S). Keep the bolts loose.

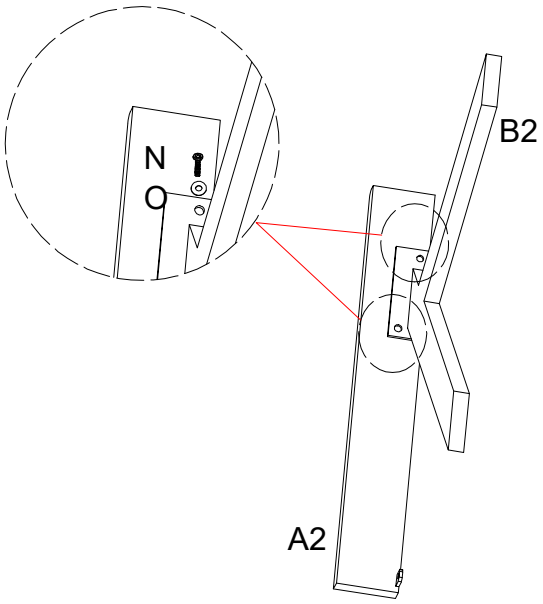

N	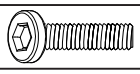	M6*20mm	2
O		Washer	2

STEP 3 Secure the seat panel (D) to assembled left leg (B1) with 4 bolts (M) and 4 washers (O) by using Allen Wrench (S). Keep the bolts loose.

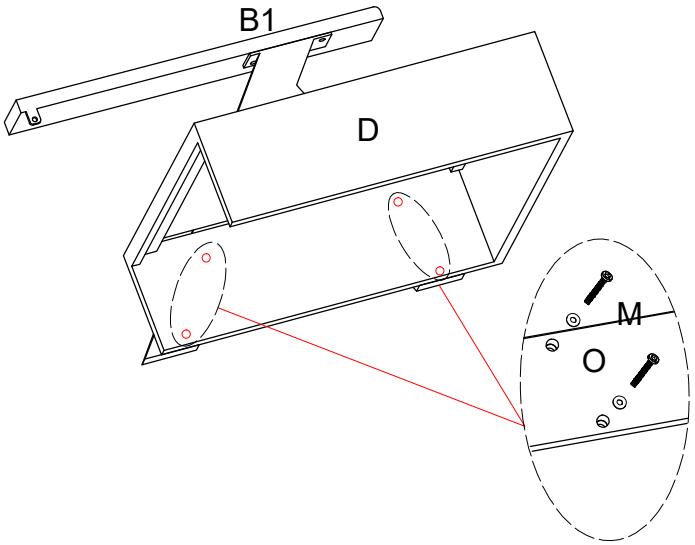

M		M6*35mm	4
O		Washer	4

STEP 4 Secure the seat panel (D) to assembled right leg (B2) with 4 bolts (M) and 4 washers (O) by using Allen Wrench (S). Keep the bolts loose.

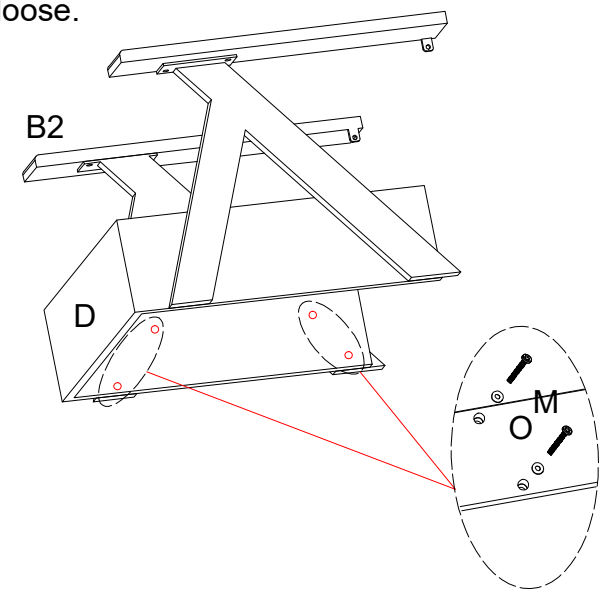

M		M6*35mm	4
O		Washer	4

STEP 5 Secure the back (C) to the assembled arms (A1 & A2) with 2 bolts (N) and 2 washers (O) by using Allen Wrench (S). Keep the bolts loose.

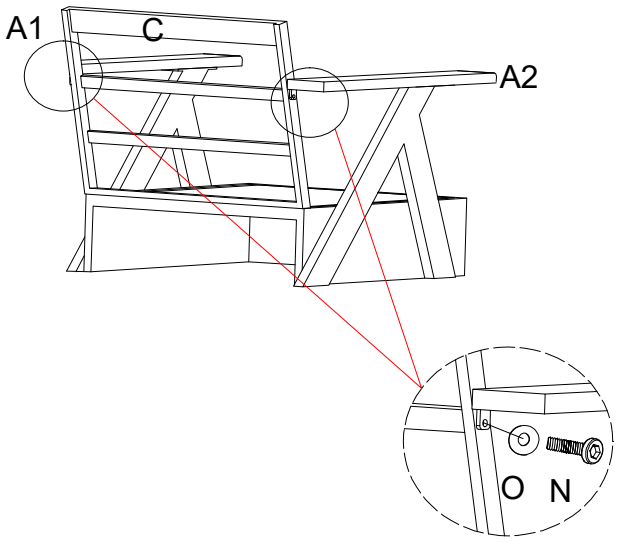

N	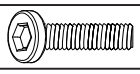	M6*20mm	2
O		Washer	2

STEP 6 Secure chair back (C) to assembled seat panel (D) with 2 bolts (L) and 2 washers (O) by using Allen Wrench (S). Keep the bolts loose.

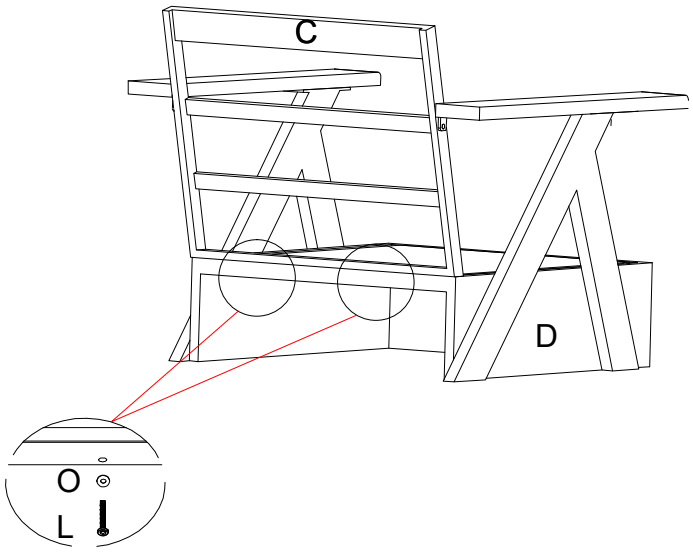

L		M6*45mm	2
O		Washer	2

STEP 7 Secure connecting rod-down (G) and connecting rod-up (H) to the base (F) with 4 bolts (N) and 4 washers (O) by using Allen Wrench (S). Keep the bolts loose.

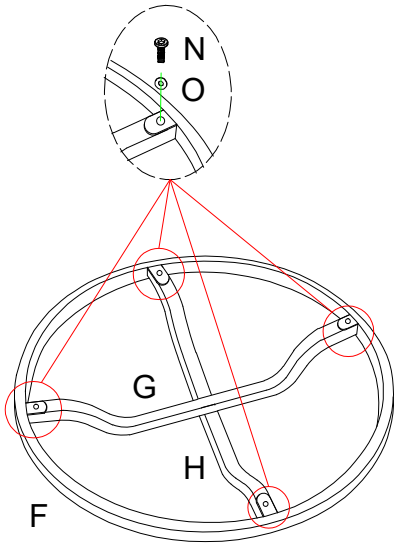

N	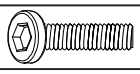	M6*20mm	4
O		Washer	4

STEP 8 Secure the swivel plate (I) to the assembled rods (G & H) with 4 bolts (M), 8 washers (O), 4 spring washers (R) and 4 nuts (Q) by using Allen Wrench (S) and Socket Wrench (T). Keep the bolts loose.

M		M6*35mm	4
O		Washer	8
R		Spring Washer	4
Q		M6 Nut	4

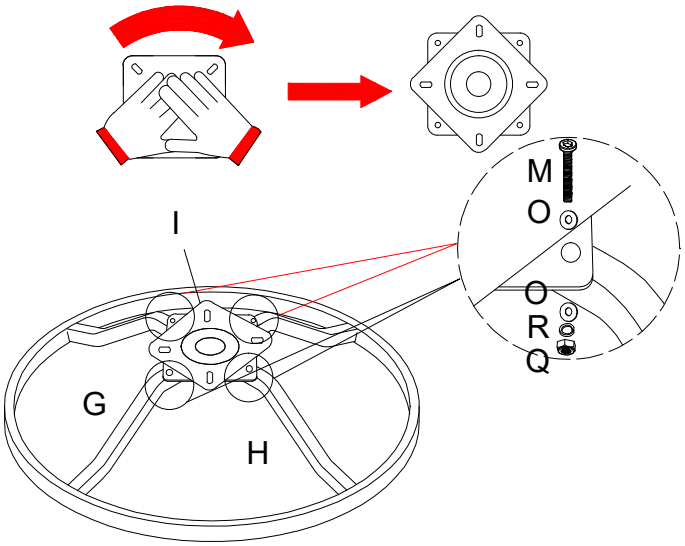

STEP 9 Secure U-shaped fitting (E) to assembled swivel plate (I) with 4 bolts (M), 8 washers (O), 4 spring washers (R) and 4 nuts (Q) by using Allen Wrench (S) and Socket Wrench (T). Keep the bolts loose.

M		M6*35mm	4
O		Washer	8
R		Spring Washer	4
Q		M6 Nut	4

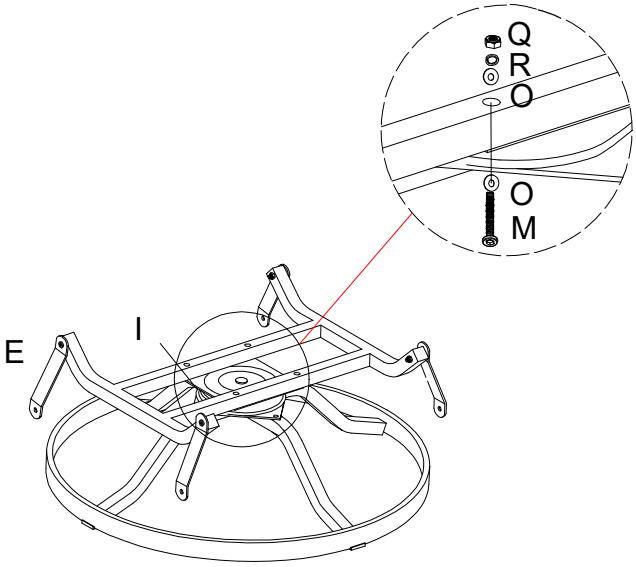

STEP 10 Secure the assembled U-shaped fitting (E) to the seat panel (D) with 4 bolts (P) by using Allen Wrench (S). Keep the bolts loose.

P	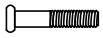	Ø9.5*24*M6	4

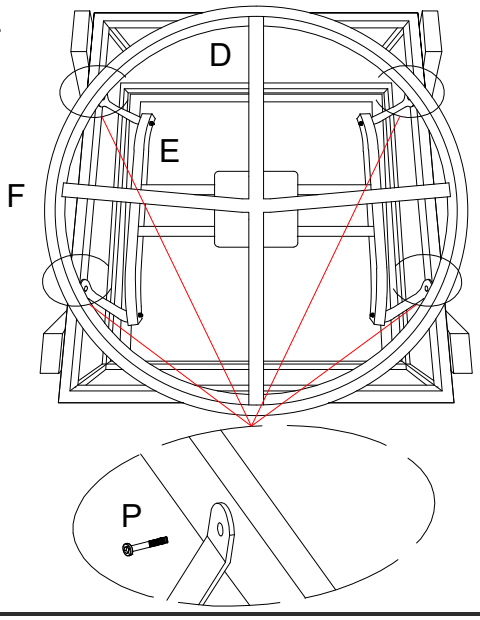

STEP 11 Tighten all bolts. put the cushions onto the chair.



Tips: Please velcro Seat Cushions onto the Back Panel. Above image for reference.

