GLACIER BAY®

Item #1007645938
1009249652
1012647338
1009338739
Model # Huckleberry 24WT
Huckleberry 24SW
Huckleberry 24W
Huckleberry 24WT

USE AND CARE GUIDE

HUCKLEBERRY 24 IN. VANITY

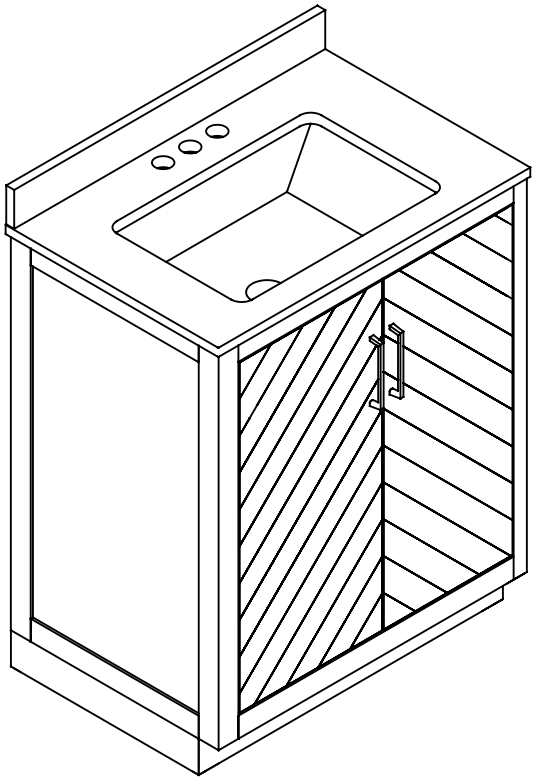

Questions, problems, missing parts?
Before returning to the store, call Glacier Bay Customer Service
8 a.m. - 7 p.m., EST, Monday - Friday, 9 a.m. - 6 p.m., EST, Saturday

GLACIER (1-855-434-5224)

HOMEDEPOT.COM/GLACIERBAY

THANK YOU

We appreciate the trust and confidence you have placed in Glacier Bay through the purchase of this vanity. We strive to continually create quality products designed to enhance your home. Visit us online to see our full line of products available for your home improvement needs. Thank you for choosing Glacier Bay!

Table of Contents

Table Of Contents 2
Safety Information 2
Warranty 3
Warranty Information 3
Pre-Installation 3
Planning Installation 3
Tools Required 3
Package Contents 4
Installation 5
Drawer Adjustment 7
How To Adjust The Door's Position 8
Maintenance And Care 9
Care And Cleaning 9
Troubleshooting 9

Safety Information

DANGER

- □ Keep small parts away from children during assembly.
- □ Failure to follow warnings and cautions could result in serious injury.
- □ DO NOT use harsh bathroom cleaners or grout cleaners on any natural stone.

WARNING

- □ Read these instructions carefully and keep in a safe place.
- □ Adult assembly required.
- □ Do not over tighten connectors (screws, bolts, etc.) Overtightening can lead to product damage.
- □ Small parts may present choking hazard prior to assembly.
- □ Do not stand, step or climb on unit.

Caution

- □ USE preventative cleaning mesures to keep your stone pristine.
- □ USE sealers according to the product specific directions.
- □ Blot spills quickly, and wash with mild soap and warm water.
- □ Stone countertops (Granite, Marble, etc.) are suprisingly resiliant to stains and scratches. However, as a preventative measure, any spills on the stone surfaces should be wiped up within a reasonable amount of time. Do not let liquid sit on the stone overnight. Stones are most prone to staining by oil and acid, so be sure to blot these spills as soon as they happen. Follow up by cleaning the stone with a mild non-abrasive soap and water.
- □ Be sure to check all packing materials carefully for small parts that may have come loose inside the carton during shipment. If parts are missing, contact THE HOME DEPOT to obtain any missing parts.
- □ Using abrasive cleansers will damage the surface.

Warranty

WARRANTY INFORMATION

Glacier Bay products are manufactured to meet high-quality standards and workmanship and are backed by our 1-Year Warranty. This warranty is provided to the original consumer purchaser and covers any defects in materials or workmanship under normal residential use. We will replace, free of charge, any product or parts that prove to be defective during the warranty period.

To obtain warranty service, please return the product or part to any Glacier Bay retail location or contact our customer service at

GLACIER (1-855-434-5224) to receive a replacement item. Proof of purchase (the original sales receipt) from the original consumer purchaser is required for all warranty claims.

Pre-Installation

PLANNING INSTALLATION

Check the vanity for damage before installation. If any part of the vanity is missing or damaged, contact the Customer Service Team at GLACIER (1-855-434-5224).

Ensure that the vanity location is accessible to water supply and drain lines. It is suggested that you rough-in the water lines and drain before installing the vanity.

NOTE: A drain pipe and trap are not included with this vanity.

TOOLS REQUIRED

NOTE: Tools are not included.



Safety goggles



Philips screwdriver



Level



Silicone

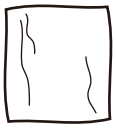

Clean rag

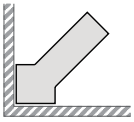

Caulk finishing tool

Pre-Installation (continued)

PACKAGE CONTENTS

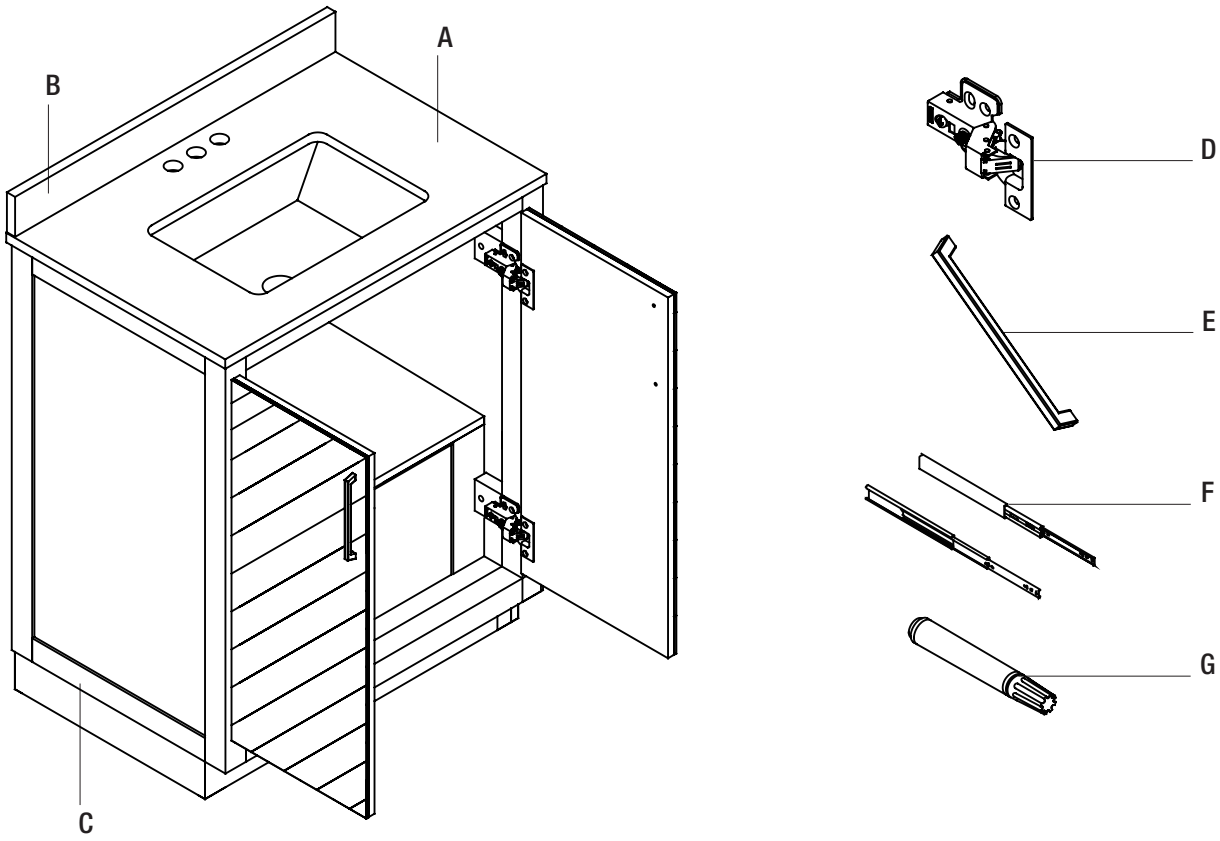

Part	Description	Quantity
A	Countertop	1
B	Backsplash	1
C	Vanity	1
D	Door hinge (Pre-assembled)	4
E	Handle (Pre-assembled)	2
	Handle (Optional)	2
F	Drawer glides (A pair) (Pre-assembled)	1
G	Touch-up pen	1

Installation

1 Installing the handle

- □ Uninstall the handles (E) located inside the doors.
- □ Align the handles (E) with the pre-drilled holes located outside the doors.
- □ Secure the handles (E) with bolts.

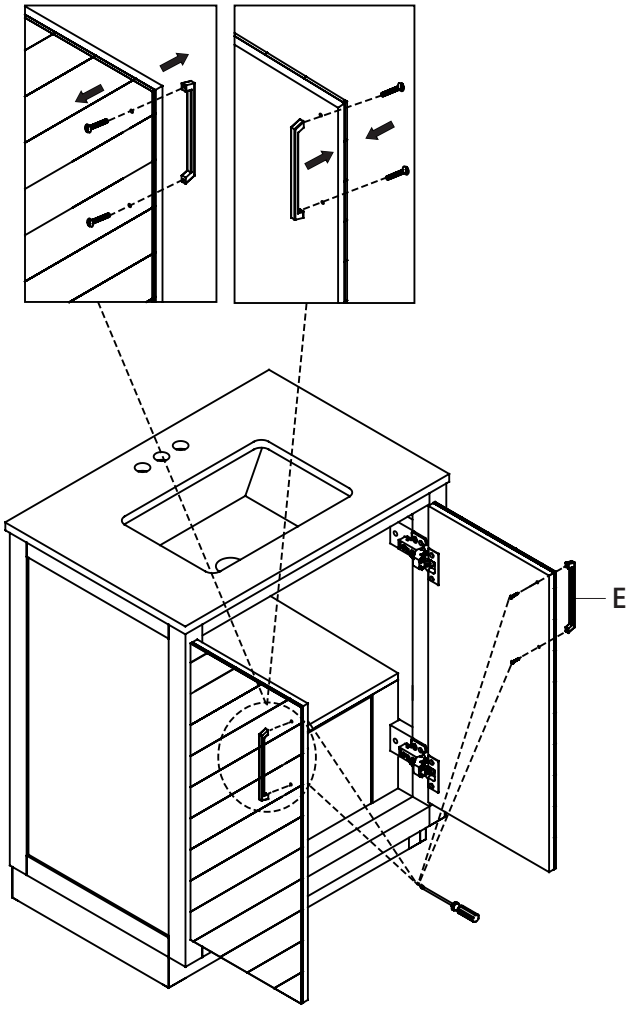

2 Countertop sealing

- □ Apply silicone sealant along the edge underneath the countertop where it meets the cabinet top trim.

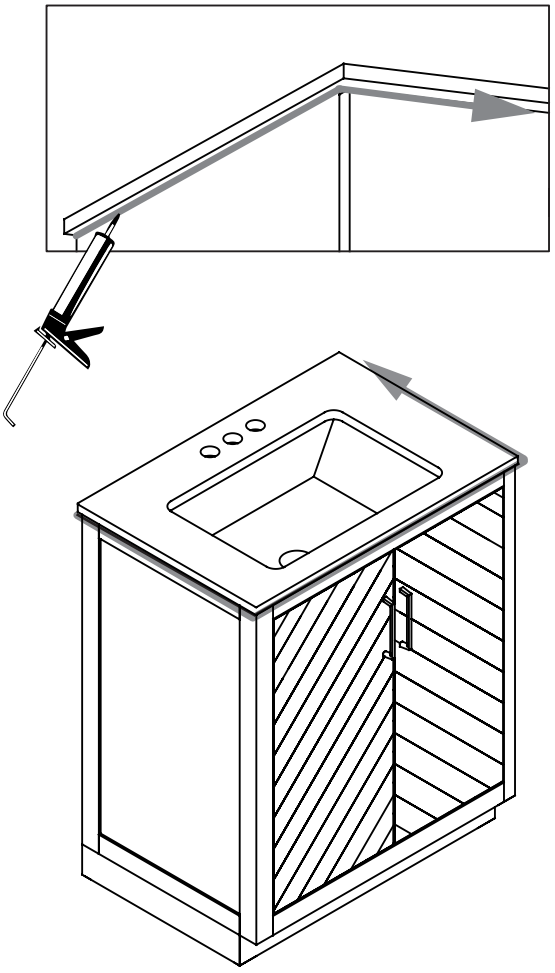

Please contact GLACIER (1-855-434-5224) for further assistance.

3 Attaching the backsplash

- □ Wipe off the area on the top of the countertop (A) where the backsplash (B) will sit using a clean rag.
- □ Apply a line of silicone onto the bottom of the backsplash (B).
- □ Align the backsplash (B) with the back edge. Slowly lower it onto the countertop (A) and gently press to adhere.

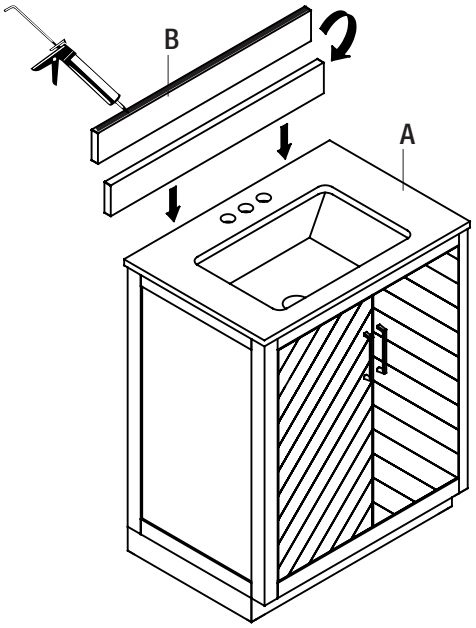

4 Completing the assembly

- □ Wipe away any seeping silicone from underneat the backsplash (B) with a caulk finishing tool.

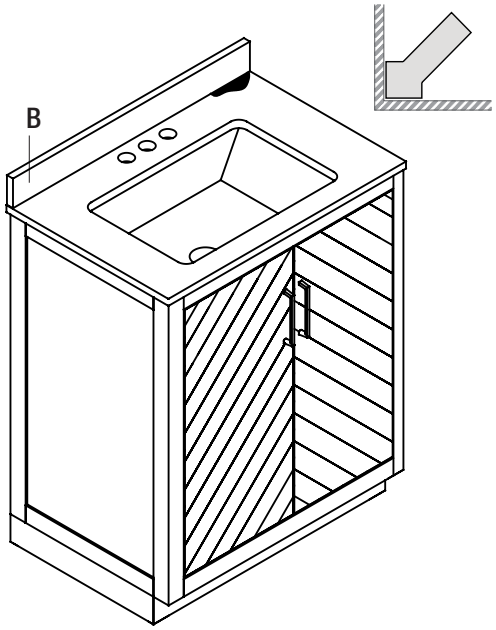

5 Drying

- □ Allow the vanity to dry for 24 hours before use.

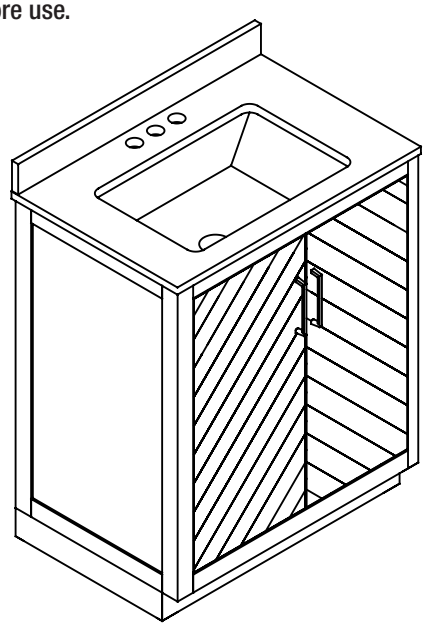



Drawer Adjustment

1 How to remove drawer

Each drawer is designed to be removed or replaced:

- □ 1.1. Pull out the drawer until the lock pins located at the sides of the drawer are easy to reach. Pull up the lock pin on the left side of the drawer, and push it down on the right side to release the drawer.
- □ 1.2. Pull out the drawer to remove it.

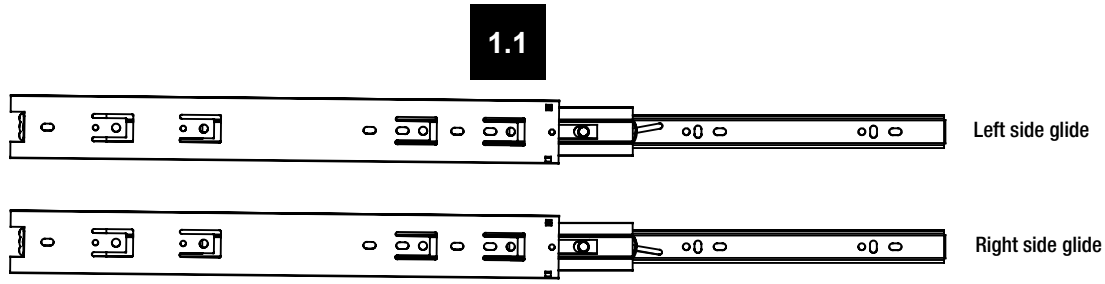

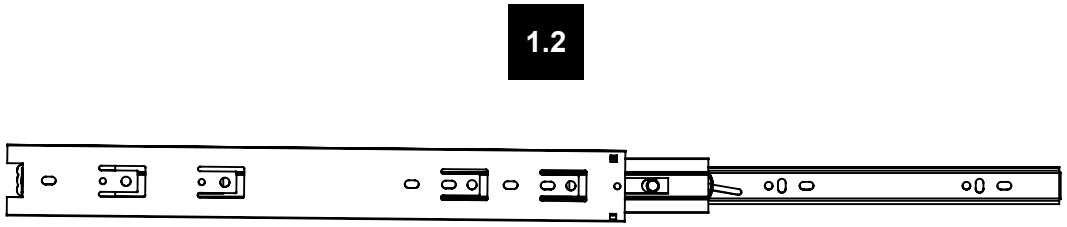

2 Drawer installation

- □ Insert the drawer into the glides. Completely slide in the drawer, then the drawer will automatically click in place.

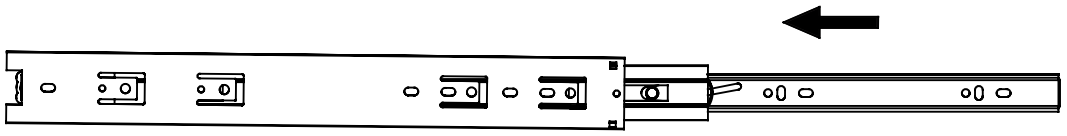

How to adjust the door's position

1 Door's in and out adjustment

□ To adjust the door front In and Out in-depth, loosen screw (AA), align the door, and tighten screw (AA).

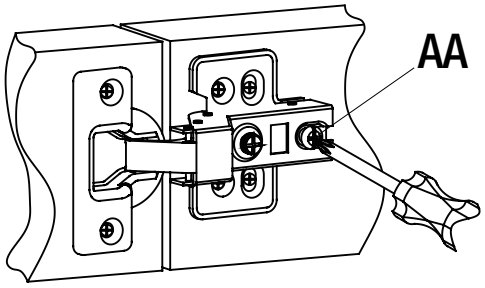

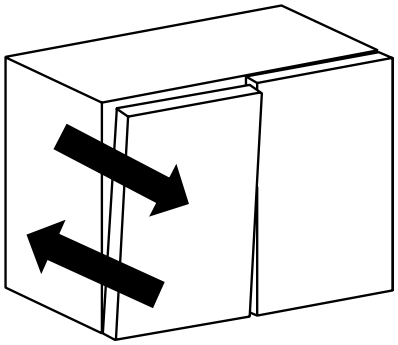

2 Door's left and right adjustment

□ To adjust the door front Left and Right, rotate the adjustment screw (BB).

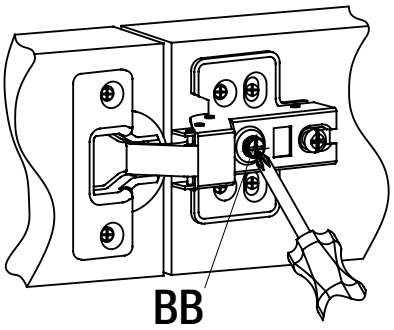

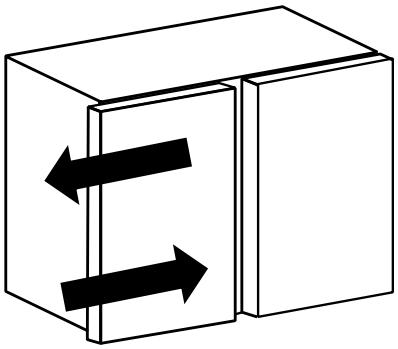

Maintenance and Care

- □ Stone countertops (Granite, Marble, etc.) are surprisingly resilient to stains and scratches. However, as a preventative measure, any spills on the stone surfaces should be wiped up within a reasonable amount of time. Do not let liquid sit on the stone overnight. Stones are most prone to staining by oil and acid, so be sure to blot these spills up as soon as they happen. Follow up by cleaning the stone with a mild non-abrasive soap and water.
- □ In bathrooms specifically, stone tends to attract soap scum, just like man-made tile. Rinse vanity top with clean, hot water frequently.
- □ The use of sealers is also a powerful preventative measure. Your stone was sealed at the factory, but reapplication is necessary over time. How often is determined by the quality of the sealer used, and the frequency of use. We recommend using a penetrating non-toxic sealer for bath areas, but a food-safe sealer is typically not necessary.
- □ If stains and scratches do occur, there are many things you can do as a consumer to remove them. Remove oil based stains with acetone, mineral spirits, or ammonia. Organic stains like coffee, tea, or juice can be removed with hydrogen peroxide, mixed with a few drops of ammonia.
- □ Water spots or rings are the most common problem with bath vanities, and are caused by minerals left behind when water evaporates. These can be removed by buffing the spots gently with 00 gauge steel wool. Likewise, small nicks and scratches can often be removed the same way. Larger scratches, chips, and resilient stains may require professional help. Please contact your local stonemason for details.
- □ Touch-up pen: Apply it to the desired location.

Care and Cleaning

- □ Liquid spills, such as alcohol, medications, etc should be cleaned up promptly. Some liquids with high-acid content can etch marble surfaces if left for any length of time. Popular products that should be promptly cleaned up are: shaving cream, toothpaste, perfume, cologne, nail polish remover, hair coloring and perm products, shampoo, drain opener, and toilet bowl cleaner.
- □ Place protective pads on the bottoms of any heavy objects, such as pottery, appliances, or other objects that may scratch the marble surface.
- □ Avoid abrasive cleaners or rough cleaning pads. If necessary, you can use a soft buffing pad.
- □ Use coasters under drinking glasses to prevent glass rings on the surface.
- □ Do not stand on the marble top to fix overhead lights or other items. Do not place extremely heavy items on the top.

Troubleshooting

Problem	Possible Cause	Correction
Surface or product is not level.	Floor is not level.	If this product has adjustable legs, adjust the legs until the surface is level.
Doors are not properly aligned.	Door hinges not adjusted properly.	Adjust the door hinges.

GLACIER BAY®

Questions, problems, missing parts?
Before returning to the store, call Glacier Bay Customer Service
8 a.m. - 7 p.m., EST, Monday - Friday, 9 a.m. - 6 p.m., EST, Saturday

GLACIER (1-855-434-5224)

HOMEDEPOT.COM/GLACIERBAY

Retain this manual for future use.

2024-10-14