GLACIER BAY®

Item # 1012501806
Model # 23032-VS30-WA

USE AND CARE GUIDE

RORY 30 IN. SINGLE SINK VANITY

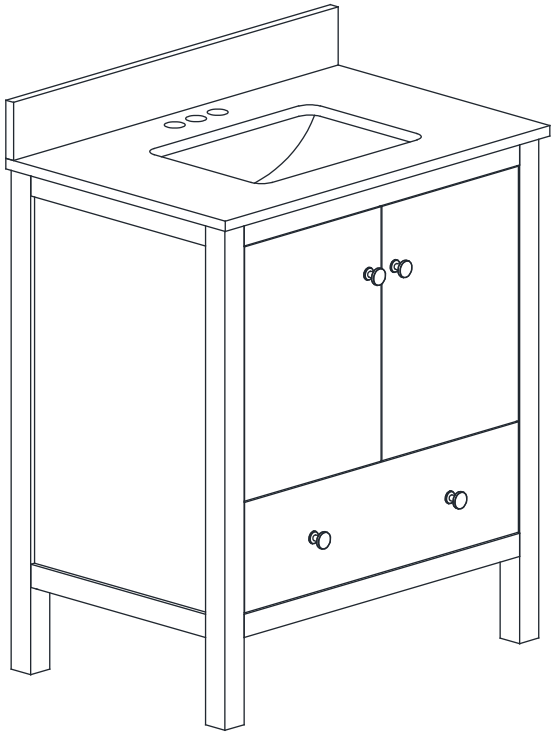

Questions, problems, missing parts? Before returning to the store,
call Glacier Bay Customer Service.
8 a.m. – 7 p.m., EST, Monday – Friday, 9 a.m. – 6 p.m., EST, Saturday

1-855-HD-GLACIER (1-855-434-5224)

HOMEDEPOT.COM / GLACIERBAY

THANK YOU

We appreciate the trust and confidence you have placed in Glacier Bay through the purchase of this vanity. We strive to continually create quality products designed to enhance your home. Visit us online to see our full line of products available for your home improvement needs. Thank you for choosing Glacier Bay

Table of Contents

Table of Contents **2**
Safety Information **2**
Warranty **3**
California and Minnesota Residents **4**
California residents 4
Minnesota residents 4
Pre-Assembly **5**
Planning Assembly 5
Tools Required 5
Package Contents 5
Assembly **6-7**
Maintenance **8**
Care and Cleaning **8**
Troubleshooting **8**

Safety Information

DANGER

- Keep small parts away from children during assembly.
- Failure to follow warnings and cautions could result in serious injury.
- Product is designed to hold 50 lbs. Exceeding this limit may damage the product or cause injury to the user.
- Do not use harsh bathroom cleaners or grout cleaners on any natural stone.

WARNING

- Read these instructions carefully and keep in a safe place.
- Adult assembly required.
- This product should only be used on a flat, level surface.
- Do not over tighten connectors (screws, bolts, etc.) Overtightening can lead to product damage.
- Small parts may present choking hazard prior to assembly.
- Do not stand, step or climb on unit.

CAUTION

- USE preventative cleaning measures to keep your stone pristine.
- USE sealers according to the product specific directions.
- Blot spills quickly, and wash with mild soap and warm water.
- Stone countertops (Granite, Marble, etc.) are surprisingly resilient to stains and scratches. However, as a preventative measure, any spills on the stone surfaces should be wiped up within a reasonable amount of time. Do not let liquid sit on the stone overnight. Stones are most prone to staining by oil and acid, so be sure to blot these spills up as soon as they happen. Follow up by cleaning the stone with a mild non-abrasive soap and water.
- Be sure to check all packing materials carefully for small parts that may have come loose inside the carton during shipment. If parts are missing, contact THE HOME DEPOT to obtain any missing parts.
- Using abrasive cleansers will damage the surface.

Warranty

LIMITED LIFETIME WARRANTY

WHAT IS COVERED

Glacier Bay products are manufactured with superior quality standards and workmanship and are backed by our limited lifetime warranty. Glacier Bay products are warranted to the original consumer purchaser to be free of defects in materials or workmanship. We will replace FREE OF CHARGE any product or parts that proves defective. Simply, return the product / part to any of The Home Depot retail locations or call 1-855-HD-GLACIER (1-855-434-5224) to receive the replacement item. Proof of purchase (original sales receipt) from the original consumer purchaser must be made available for all Glacier Bay warranty claims.

WHAT IS NOT COVERED

This warranty excludes incidental / consequential damages and failures due to misuse, abuse or normal wear and tear. This warranty excludes all industrial, commercial & business usage, whose purchasers are hereby extended a five-year limited warranty from the date of purchase, with all other terms of this warranty applying except the duration of warranty. Some states and provinces do not allow the exclusion or limitation of incidental or consequential damages, so the above limitations may not apply to you. This warranty gives you specific legal rights and you may also have other rights that vary from state to state and province to province.

Contact the Customer Service Team at 1-855-HD-GLACIER(1-855-434-5224) or visit www.HomeDepot.com.

California and Minnesota Residents

CALIFORNIA RESIDENTS

WARNING: THIS PRODUCT CAN EXPOSE YOU TO CHEMICALS INCLUDING FORMALDEHYDE WHICH IS KNOWN TO THE STATE OF CALIFORNIA TO CAUSE CANCER AND BIRTH DEFECTS OR OTHER REPRODUCTIVE HARM. GO TO WWW.P65Warnings.ca.gov/products

MINNESOTA RESIDENTS

"IMPORTANT HEALTH NOTICE.

SOME OF THE BUILDING MATERIALS USED IN THIS HOME (OR THESE BUILDING MATERIALS) EMIT FORMALDEHYDE. EYE, NOSE, AND THROAT IRRITATION, HEADACHE, NAUSEA AND A VARIETY OF ASTHMA-LIKE SYMPTOMS, INCLUDING SHORTNESS OF BREATH, HAVE BEEN REPORTED AS A RESULT OF FORMALDEHYDE EXPOSURE. ELDERLY PERSONS AND YOUNG CHILDREN, AS WELL AS ANYONE WITH A HISTORY OF ASTHMA, ALLERGIES, OR LUNG PROBLEMS, MAY BE AT GREATER RISK. RESEARCH IS CONTINUING ON THE POSSIBLE LONG-TERM EFFECTS OF EXPOSURE TO FORMALDEHYDE.

REDUCED VENTILATION MAY ALLOW FORMALDEHYDE AND OTHER CONTAMINANTS TO ACCUMULATE IN THE INDOOR AIR. HIGH INDOOR TEMPERATURES AND HUMIDITY RAISE FORMALDEHYDE LEVELS. WHEN A HOME IS TO BE LOCATED IN AREAS SUBJECT TO EXTREME SUMMER TEMPERATURES, AN AIR-CONDITIONING SYSTEM CAN BE USED TO CONTROL INDOOR TEMPERATURE LEVELS. OTHER MEANS OF CONTROLLED MECHANICAL VENTILATION CAN BE USED TO REDUCE LEVELS OF FORMALDEHYDE AND OTHER INDOOR AIR CONTAMINANTS.

IF YOU HAVE ANY QUESTIONS REGARDING THE HEALTH EFFECTS OF FORMALDEHYDE, CONSULT YOUR DOCTOR OR LOCAL HEALTH DEPARTMENT."

Pre-Assembly

PLANNING ASSEMBLY

Estimate installation time: Half hour
Number of people required: 2 people

To ensure your installation goes smoothly, please read these instructions carefully and review the recommended tools and hardware before you begin.
To remove the old vanity (if applicable): 1) Turn off the water supply and drain out. 2) Disconnect the supply lines from the faucet.
3) Remove the old vanity top and vanity. If the new vanity is not installed immediately, temporarily stuff a rag into the drain pipes.
Using a level locate any uneven floor and / or wall areas where your vanity will be installed. Unevenness can cause your vanity to become misaligned resulting in twisting of the cabinet. Repair any uneven areas by reducing high spots or shimming low spots.

TOOLS REQUIRED

NOTE: Tools are not included.


Safety goggles


Sealant


Level

PACKAGE CONTENTS

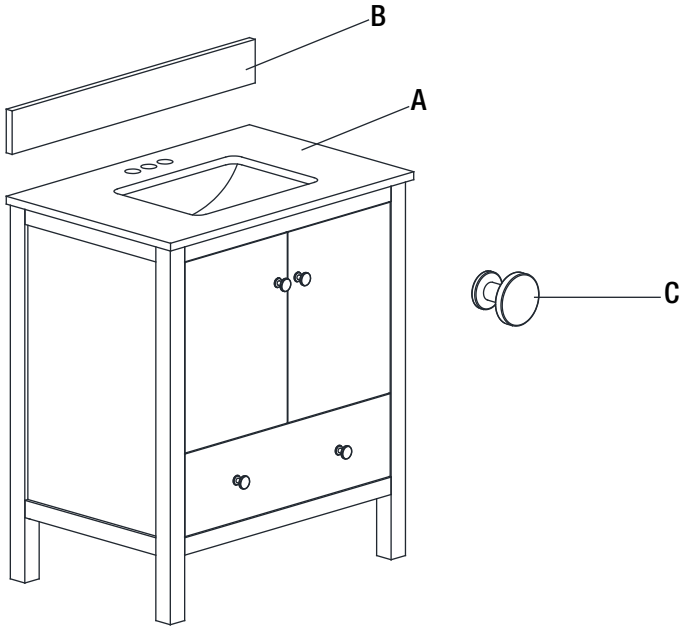

Part	Description	Quantity
A	Vanity with Top	1
B	Backsplash	1
C	Alternative Drawer / Door Knobs	4

Assembly

1 Position vanity

CAUTION: Please install by 2 people at least.

- ☐ Place the vanity with top (A) in the desired position taking into account the location of your plumbing.
- ☐ Make sure the vanity top is flush against the wall.
- ☐ Adjust the leg levelers so the vanity with top (A) is level.

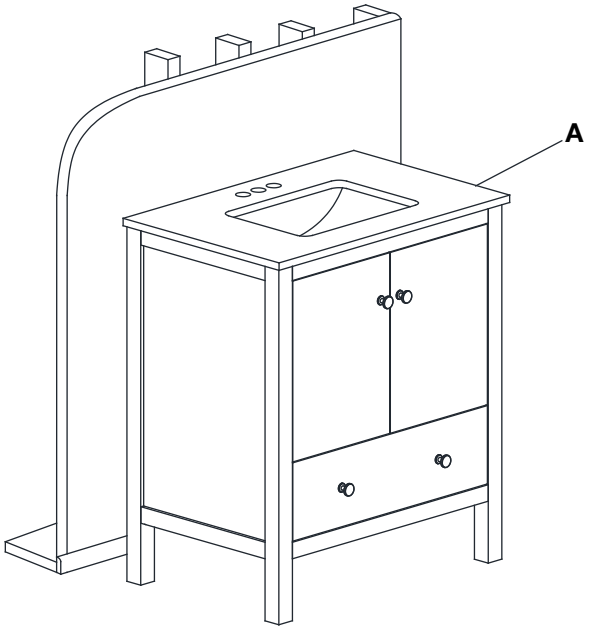

2 Apply backsplash sealant

- ☐ Clear backsplash (B) of all debris before applying clear silicon sealant (not included).
- ☐ Apply a few thin beads of sealant to unpolished back and bottom edge of the backsplash (B).

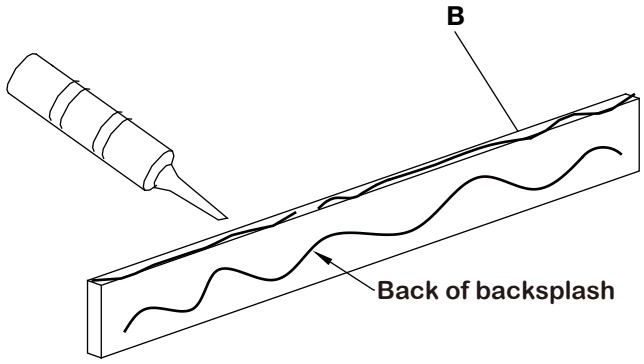

3 Install the backsplash

- ☐ Set unpolished bottom edge of backsplash (B) on the vanity counter top (A) and press gently against wall and down on the top
- ☐ Remove any excess sealant from the wall and the vanity top.

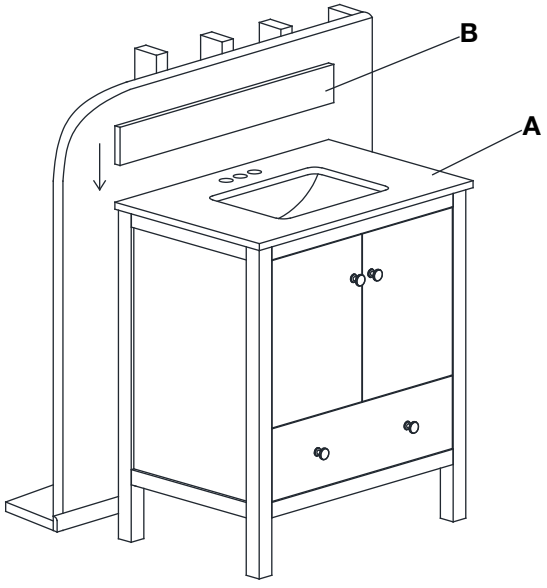

Assembly (continued)

How to remove / re-install the drawer

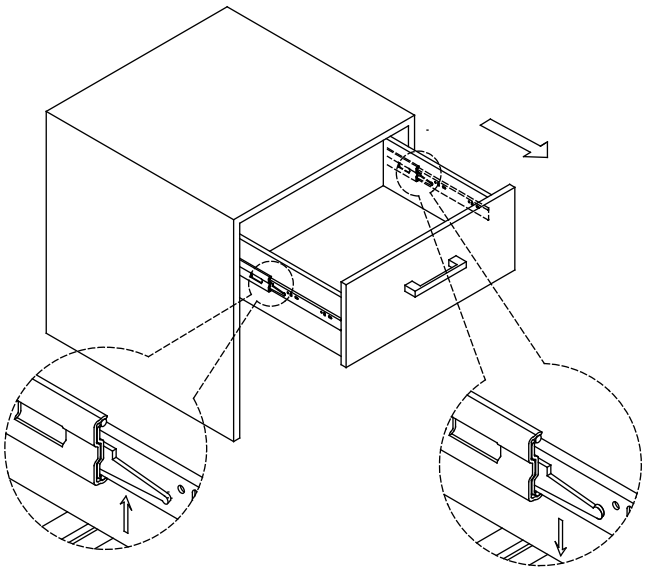

Pull the left clip upward and right clip downward at the same time, then draw the drawer out.

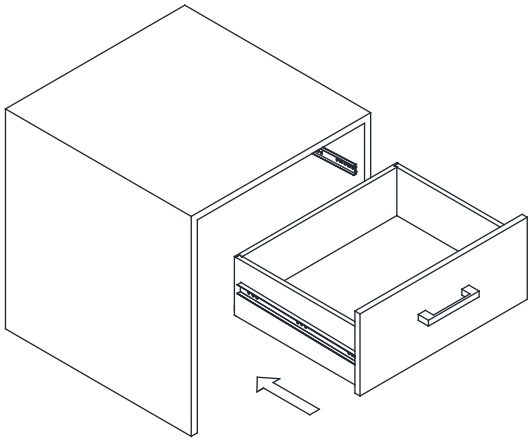

Put the interior gliders on the out gliders, then push the drawer into cabinet.

How to adjust the door

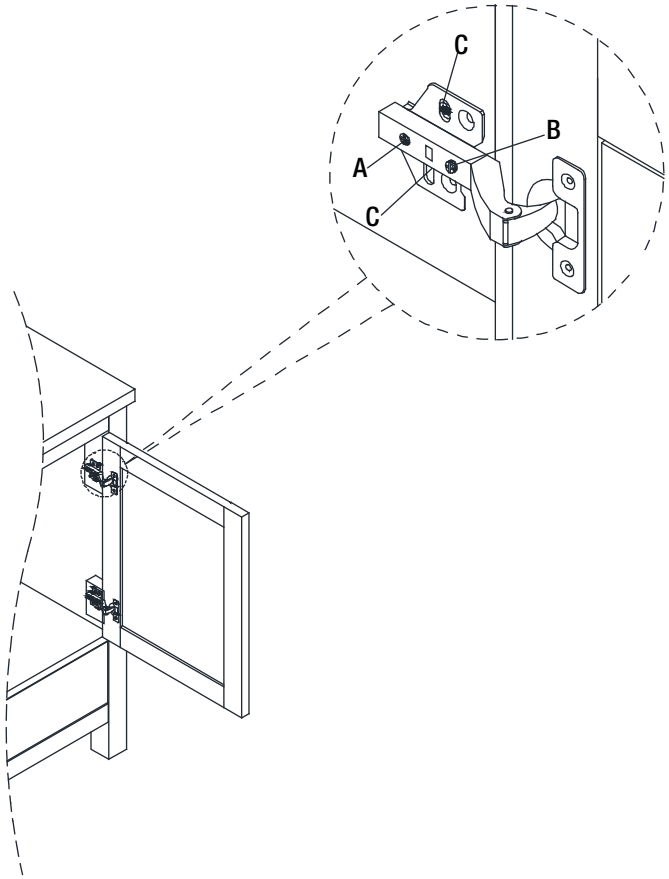

To adjust door in or out, loosen screw (A), adjust door and retighten screw (A) .

To adjust door left and right, turn screw (B) in or out.

To adjust door up or down, loosen screws (C), adjust door and retighten screws.

Maintenance

- To maintain the beauty of the furniture finish, avoid placing the vanity in direct sunlight.
- Avoid exposing the vanity combo to extreme temperatures by installing away from heat and air vents.

Care and Cleaning

Countertop Care

- Rinse vanity top with clean, hot water when needed.
- Blot spills quickly, and wash with mild soap and warm water.
- Clean the surface with a glass cleaner or other household cleansers that are non-abrasive
- Remove oil-based stains with acetone, mineral spirits, or ammonia.
- Organic stains like coffee, tea, or juice can be removed with hydrogen peroxide, mixed with a few drops of ammonia
- Water spots or rings can be removed by buffing the spots gently with 00-gauge steel wool.
- Small nicks and scratches can often be removed the same way.
- Larger scratches, chips, and resilient stains may require professional help. Please contact your local stonemason for details.
- Your vanity top was sealed at the factory, but reapplication is necessary over time. How often is determined by the quality of the sealer used, and the frequency of use. We recommend using a penetrating non-toxic sealer for best results.

Cabinet Care

- Dust the vanity frequently with a clean, soft, dry, lint-free cloth, as well as polish it on a regular basis.
- Clean up excess water and spills immediately. Use a blotting rather than a wiping action. Water left over for a long period of time will cause white spots in the finish.
- Clean the surface by rubbing in the direction of the grain. Use furniture cleaners or polishes recommended by your local hardware store, following manufacturer's application and cleaning instructions. Avoid using silicone cleaners and waxes.

Troubleshooting

Problem	Possible Cause	Corrective Action
Vanity drawer can not open / close smoothly.	The air pressure is too high inside the glider.	1. Uninstall the glider to reduce the pressure and check if the glider is good. 2. Install the glider.

GLACIER BAY®

Questions, problems, missing parts? Before returning to the store,
call Glacier Bay Customer Service.
8 a.m. – 7 p.m., EST, Monday – Friday, 9 a.m. – 6 p.m., EST, Saturday

1-855-HD-GLACIER (1-855-434-5224)

HOMEDEPOT.COM / GLACIERBAY

Retain this manual for future use.