Owner's Manual & Assembly Instructions

YM01

Model No. LM101267 ☐ NP101267 ☐

WL101267 ☐

ARROW Storage Products®

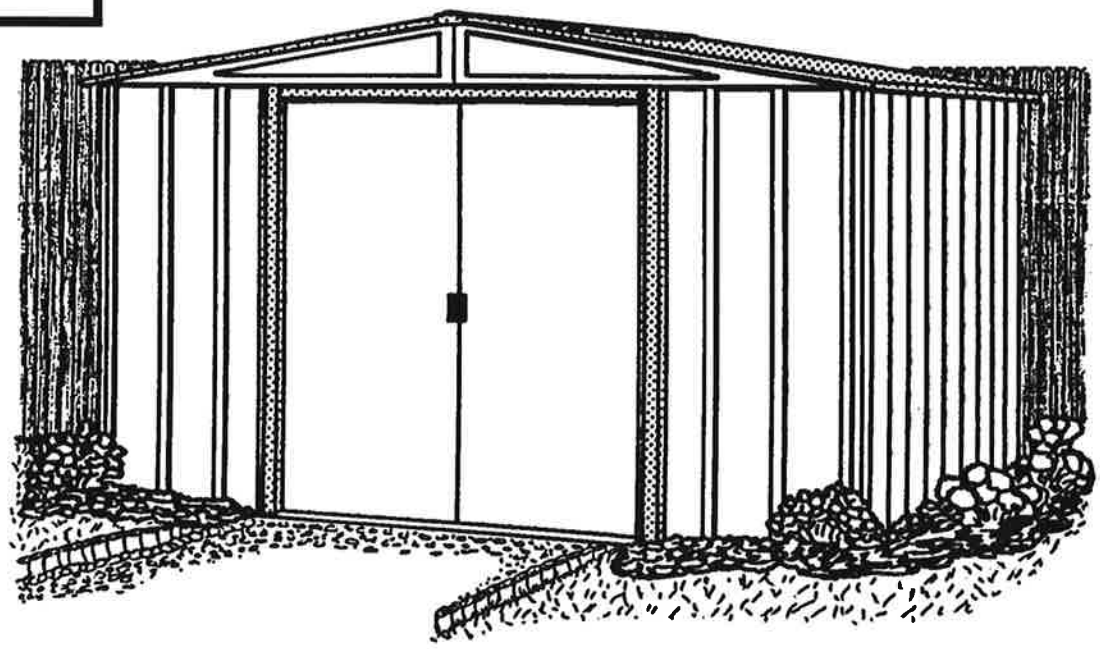

Missing Parts, Questions on Assembly?
Call: 1-800-851-1085 or
assist@arrowsheds.com
Do not return to dealer, they are not equipped to handle your requests.

716330613

Storage Area:	115 Sq. Ft.	693 Cu. Ft.
	10,7 m^2	19,6 m^3

CAUTION: SOME PARTS HAVE SHARP EDGES. CARE MUST BE TAKEN WHEN HANDLING THE VARIOUS PIECES TO AVOID A MISHAP. FOR SAFETY SAKE, PLEASE READ SAFETY INFORMATION PROVIDED IN THIS MANUAL BEFORE BEGINNING CONSTRUCTION. WEAR GLOVES WHEN HANDLING METAL PARTS.

BUILDING DIMENSIONS * Size rounded off to the nearest foot

*Approx. Size	Base Size	Exterior Dimensions (Roof Edge to Roof Edge) Width	Depth	Height	Interior Dimensions (Wall to Wall) Width	Depth	Height	Door Opening Width	Height
10' x 12'	121" x 143 1/4"	123 1/4"	145 3/4"	77 7/8"	118 1/4"	140 1/2"	76 5/8"	55 1/2"	65"
3,0 m x 3,6 m	307,3 cm x 363,9 cm	313,1 cm	370,2 cm	197,8 cm	300,4 cm	356,9 cm	194,6 cm	141,0 cm	165,1 cm

A03

BEFORE YOU BEGIN....

Owner's Manual

Before beginning construction, check local building codes regarding footings, location and other requirements. Study and understand this owner's manual.
Important information and helpful tips will make your construction easier and more enjoyable.

Assembly Instructions: Instructions are supplied in this manual and contain all appropriate information for your building model. Review all instructions before you begin, and during assembly, follow the step sequence carefully for successful results.

Flooring and Anchoring: Your storage building must be anchored to prevent wind damage. A base is necessary to construct a square and level building. Anchoring and base materials are not included with your building. We recommend the combined use of an **Arrow Floor Frame Kit** and an **Arrow Anchoring Kit** as an effective method of securing your building to the ground (Available at your local dealer, Arrow's website arrowsheds.com or call Arrow's Customer Service department 1-800-851-1085) or you may construct a base and anchoring system of your choice. Your assembly instructions provide information on a few methods commonly used to secure and level a storage building.

Parts and Parts List: Check to be sure that you have all the necessary parts for your building.

- All part numbers can be found on the parts. All of these numbers (before the -) must agree with the numbers on the Parts List page.

- If you find that a part is missing, include the model number of your building and contact:

Arrow Shed, LLC **Customer Service Department**
1101 North 4th Street **Breese, Illinois 62230**

1-800-851-1085 or assist@arrowsheds.com

- Separate contents of the carton by the part number while reviewing parts list. The first few steps show how to join related parts to make larger sub assemblies which will be used later.

- Familiarize yourself with the hardware and fasteners for easier use during construction. These are packaged within the carton. Note that extra fasteners have been supplied for your convenience.

A04

PLAN AHEAD....

Watch the Weather: Be sure the day you select to install your building is dry and calm. Do not attempt to assemble your building on a windy day. Be careful on wet or muddy ground.

Teamwork: Whenever possible, two or more people should work together to assemble your building. One person can position parts or panels while the other is able to handle the fasteners and the tools.

Tools and Materials: These are some basic tools and materials you will need for the construction of your building. Decide which method of anchoring and the type of base you wish to use in order to form a complete list of the materials you will need.

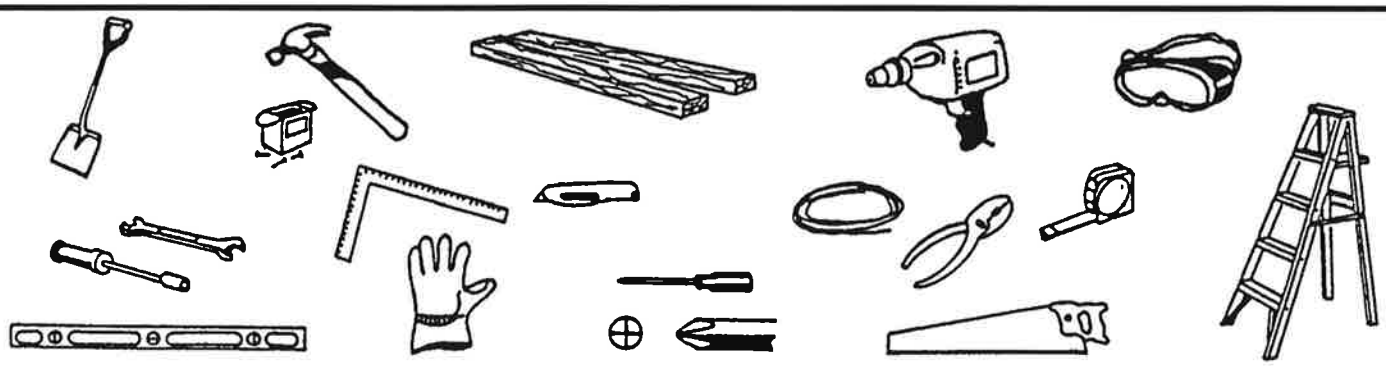

Required
- Eye Goggles
- No. 2 Phillips Screwdriver (With Hardened Magnetic Tip)

Note: A power screwdriver or variable speed drill with Phillips-tip attachment can speed assembly by as much as 40%.

Required
- Work Gloves
- Step Ladder
- Utility Knife / Scissors
- Pliers
- Carpenter's Level
- Tape Measure

Optional Time-Savers
- Wrench / Nut Driver
- Electric / Cordless Drill
- Square
- String (for squaring frame)

Base Preparation
- Hammer and Nails
- Spade or Shovel
- Hand Saw / Power Saw
- Lumber and/or Concrete

Selecting and Preparing Your Site: Before assembly, you will want to decide on a location for your building. The best location is a level area with good drainage.

- Allow enough working space for ease of moving parts into position during assembly. Be sure there will be enough space at entrance for doors to open fully and enough space around the building to be able to fasten the panel screws from the outside.

- Before you begin the first steps in assembling your parts, a base should be constructed and an anchoring system should be ready to use.

A05

SAFETY FIRST....

Safety precautions are important to follow throughout the construction of your building.

•Care must be taken when handling various pieces of your building since some contain sharp edges. Please wear work gloves, eye protection and long sleeves when assembling or performing any maintenance on your building.

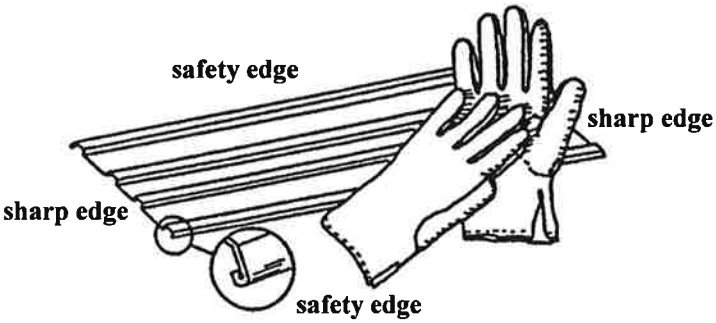

•Keep children and pets away from worksite to avoid distractions and any accidents which may occur.



•Never concentrate your total weight on the roof of the building. When using a step ladder make sure that it is fully open and on even ground before climbing on it.



•Practice caution with the tools being used in the assembly of this building. Be familiar with the operation of all power tools.



•Do not attempt to assemble the building if parts are missing because any building left partially assembled may be seriously damaged by light winds. Call 1-800-851-1085 or assist@arrowsheds.com

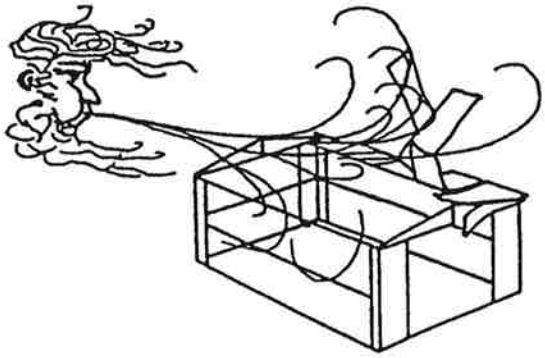

•Do not attempt to assemble the building on a windy day, because the large panels acting as a "sail", can be whipped about by the wind making construction difficult and unsafe.

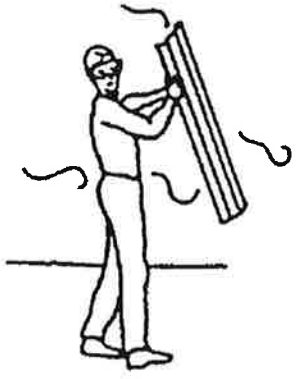

CARE & MAINTENANCE....

A06

Finish: For long lasting finish, periodically clean and wax the exterior surface. Touch-up scratches as soon as you notice them on your unit. Immediately clean the area with a wire brush; wash it and apply touch-up paint per manufacturer's recommendation.

Roof: Keep roof clear of leaves and snow with long handled, soft-bristled broom. Heavy amounts of snow on roof can damage building making it unsafe to enter. In snow country, Roof Strengthening Kits are available for most Arrow Buildings for added protection against heavy snow accumulation. Contact **Arrow** as outlined on the Ordering Accessories page to place an order.

Doors: Always keep the door tracks clear of dirt and other debris that prevent them from sliding easily. Lubricate door track annually with furniture polish or silicone spray. Keep doors closed and locked to prevent wind damage.

Fasteners: Use all washers supplied to protect against weather infiltration and to protect the metal from being scratched by screws. Regularly check your building for loose screws, bolts, nuts, etc. and retighten them as necessary.

Moisture: A plastic sheet (vapor barrier) placed under the entire floor area with good ventilation will reduce condensation.

Other Tips....

- Wash off inked part numbers on coated panels with soap and water.
- Silicone caulking may be used for watertight seals throughout the building.

Do not store swimming pool chemicals in your building. Combustibles and corrosives must be stored in air tight approved containers.

Keep this Owner's Manual and Assembly Instructions for future reference.

ACCESSORIES....

A07

ROOF STRENGTHENING (heavy snow load) KITS

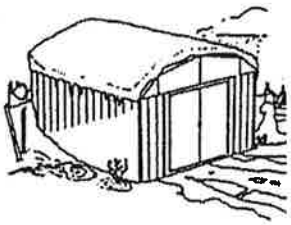

Extra roof beams and gable braces designed for added protection against heavy snow accumulation. Increases the strength of your roof by 50%.

ANCHOR KITS

Model No. AK4

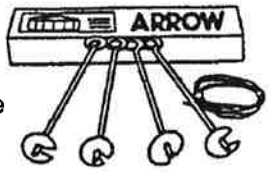

Anchor Kit contains heavy-duty steel augers, 60' (18 m) of steel cable and 4 cable clamps. No digging or concrete pouring, just insert cable under roof, over roof beams, into augers and twist augers into the ground. For buildings larger than 10'x9' (3,0 m x 2,6 m), use 2 kits.

Model No. AK100

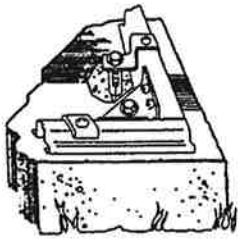

New concrete anchor system permits anchoring any size Arrow building directly to a concrete slab. Each kit contains heavy-duty, hot-dipped galvanized steel corner gussets and perimeter clips which fit over the floor frame and lag bolt into a concrete slab. Full assembly instructions and a 1/4" masonary drill bit are included.

Model No. AK600

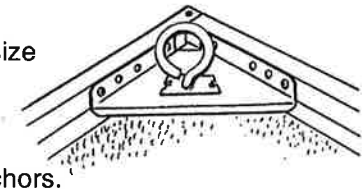

Earth Anchor Kit anchors any size Arrow building to the ground. Each kit contains heavy duty, hot-dipped galvanized steel corner gussets and 4 earth anchors.

TOOL HANGING RACK

Model No. TH100

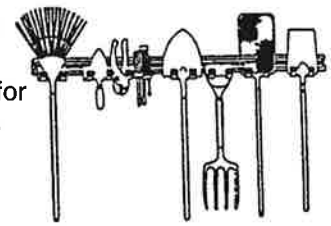

The perfect tool organizer. Twin 25 1/2" (64,8 cm) steel channels plus five heavy-duty snap-in hangers and a small tool holder for screwdrivers, pliers, etc. Holders slide along channel for fully adjustable spacing. Great for garage, basement, or the back of any door. Fits all Arrow storage buildings.

FLOOR FRAME KITS

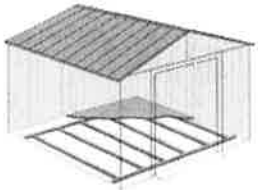

MODELS FB47410, FB5465, FB106-A
FB109-A and FB1014-A

A simple new floor frame system made of heavy-duty, hot-dipped galvanized steel. Use as base for plywood, sand or stone.

ATTIC KIT / WORKBENCH KIT

Model No. AT101

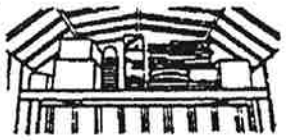

Heavy-duty galvanized steel bars that fit all 10' (3,0 m) wide Arrow buildings. They install quickly and easily to help organize space and create more useable space as an attic or workbench. Will hold up to 250 lbs. (113 kg) evenly distributed.

Some drilling required to fit buildings without mid-wall bracing.

SHELF UNITS

Heavy-duty, galvanized steel shelf units help organize storage space. They easily mount on the wall or sit on the floor. Fits all Arrow buildings.*

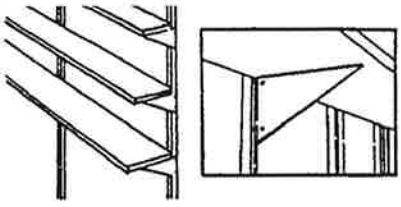

Model No. SS404

- Makes 8" to 12" (20,3-30,5 cm) wide shelves in any length.
- Brackets, braces, hardware included. Lumber is not included.

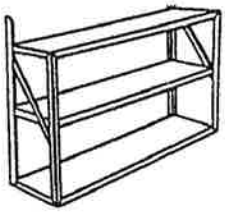

Model No. SS900-B

- Grey color
- 3 shelves
- Holds up to 85 lbs. (38 kg) (even weight distribution)

* Some drilling required to fit buildings without mid-wall bracing.

ORDERING ACCESSORIES....

A08 02/13

We recommend that you purchase accessory items from your local storage building dealer whenever possible; however, because the full line of accessories is not always available from all dealers, **Arrow** is offering them to you on a direct basis.

There are two ways to order Arrow Storage Building Accessories:

Option 1	Option 2
Accessories can be purchased through **arrowsheds.com**	Order accessories by telephone using your MasterCard or Visa credit card. Call toll free **1-800-851-1085** (Customer Service). Allow 2 weeks for delivery.

SPECIAL NOTE:

If your accessory is shipped via truck line a day time phone number is required to arrange delivery. If no one is available to sign for the delivery, you may be subject to a re-delivery charge assessed by the carrier.

AQ09

Base

The Base For Your Building



No matter which of the options below you choose for a base, an ARROW ANCHORING KIT is recommended as an effective method of properly securing your building after assembly is complete.

OPTION 1: Directly on ground (earth)

Assemble your building directly on level ground (grass, dirt, rock, sand, etc.). If you choose this option Arrow has a simple kit available to provide a floor **inside** the shed to keep stored items off the ground. This kit can be used to support a plywood floor (wood not included) or be filled with sand/rock to provide a solid surface. (Order No. FB1014-A or 68387-A)
Allow 1 - 2 hours for construction.

OPTION 2: Wood Platform

If you decide to build your own base, be sure to select the appropriate materials.
These are the recommended materials for your base:

- 2 x 4's (38 mm x 89 mm) Pressure Treated Lumber
- 5/8" (15,5 mm) 4 x 8 (1220 mm x 2440 mm) Plywood-exterior grade **NOTE:** Pressure Treated Lumber must not be used where it will make contact with your storage building. The properties of Pressure Treated Lumber will cause accelerated corrosion.

If Pressure Treated Lumber comes in contact with your storage building your warranty will be voided.

- 10 & 4 penny Galvanized Nails ● Concrete Blocks (optional)

The platform should be level and flat (free of bumps, ridges etc.) to provide good support for the building. The necessary materials may be obtained from your local lumber yard.

To construct the base follow instructions and diagram.
Construct frame (using 10 penny galvanized nails)
Measure 16"/24" (40,6 cm/61,0 cm) sections to construct inside frame (see diagram)
Secure plywood to frame (using 4 penny galvanized nails)

Allow 6 - 7 hours for construction.

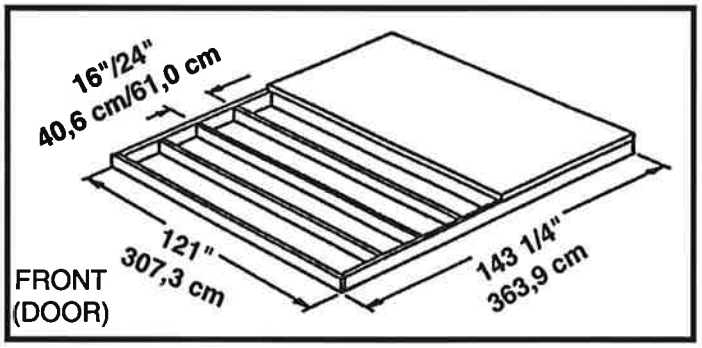

Note: Platform/Slab will extend 9/16" (1,4 cm) beyond floor frame on all four sides. Seal this 9/16" (1,4 cm) of wood with a roofing cement (not included), or bevel this 9/16" (1,4 cm) of concrete when pouring, for good water drainage.

OPTION 3: Concrete Slab

The slab should be at least 4" (10,2 cm) thick. It must be level and flat to provide good support for the frame.
The following are the recommended materials for your base.

- 1 x 4's (19 mm x 89 mm) (will be removed once the concrete cures)
- Concrete ● Sheet of 6 mil plastic
- We recommend for a proper strength concrete to use a mix of:

1 part cement ● 3 parts pea sized gravel ● 2 1/2 parts clean sand

Prepare the Site/Construct a Base

1. Dig a square, 6" (15,2 cm) deep into the ground (remove grass).
2. Fill up to 4" (10,2 cm) in the square with gravel and tamp firm.
3. Cover gravel with a sheet of 6 mil plastic.
4. Construct a wood frame using four planks of 1x4 (19 mm x 89 mm) lumber.
5. Pour in concrete to fill in the hole and the frame giving a total of 4" (10,2 cm) thick concrete. Be sure surface is level.

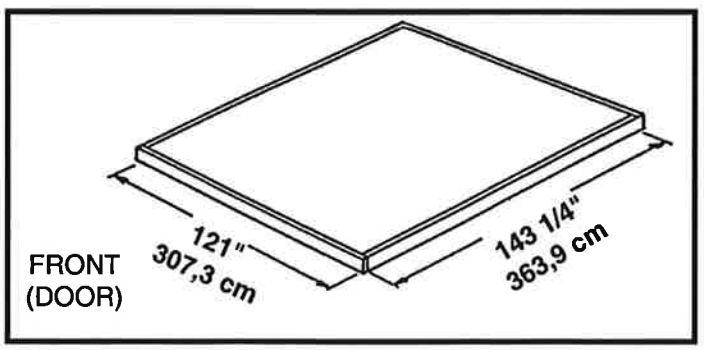

Allow 3 - 5 hours for construction and a week for concrete curing time Note: Finished Slab dimensions, with lumber removed.

A10

Anchoring

Anchoring Down The Building

It is important that the entire floor frame be anchored after the building is erected.
Below are recommended ways of anchoring.

Arrow Anchoring Kit: (Model No. AK4 or 60298)
Recommended for use with **any** suggested **base.**
Contains: 4 Anchors with Cable, Clamps and installation instruction.

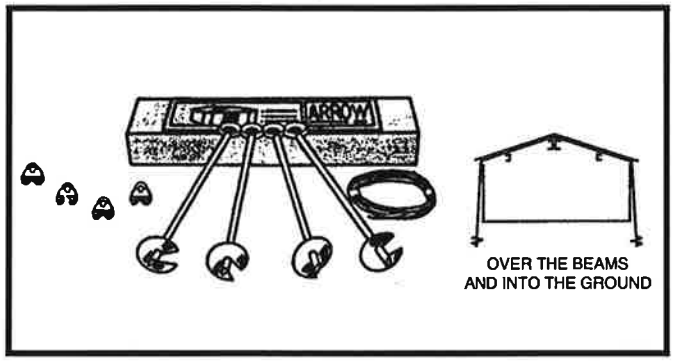

Anchoring into Wood/Post:
Use 1/4" (6 mm) Wood Screws. There are 1/4" (6 mm) dia. holes provided in the frames for proper anchoring.

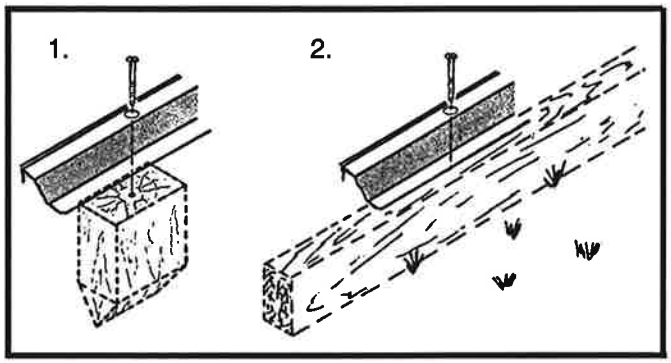

Arrow Anchoring Kit: (Model No. AK100 or 68383)
Recommended for use with the **concrete** base.
Contains: Corner gussets, perimeter clips, hardware, 1/4" masonary drill bit and installation instruction.

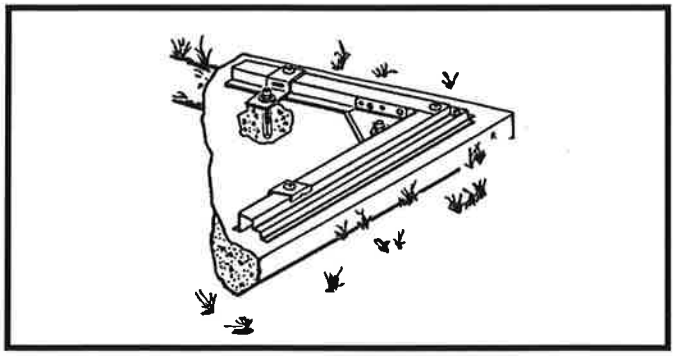

Anchoring into Concrete:
1. For poured concrete slab or footing or patio blocks: Use 1/4" x 2" (6 mm x 51 mm) Lag Screws.
2. For Anchor Post of Concrete poured after building is erected: Use 1/4" x 6" (6 mm x 152 mm) Lag Screws.

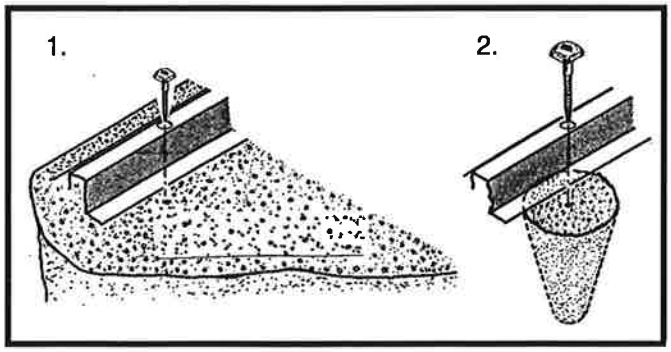

SV11

Hardware

Remove from bag of screws and save for the last step



65103
#8-32 Hex Nut (175)



65900A
#10Bx1/2" (13 mm)
Black Screw (8)
(Packed with Screws)



65923
#8-32x3/8" (10 mm)
Bolt (175)



65004
#8Ax5/16" (8 mm)
Screw (402)

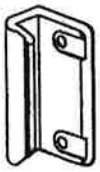

66045
Handle (2)

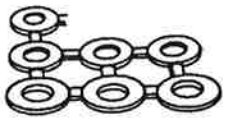

66646
Washer (428)
(11 sheets of 40)



65109
#8-32 Acorn Nut (4)
(Packed with Screws)

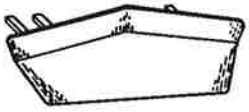

67468
Peak Cap (2)

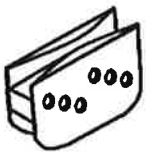

66769
Door Slide (4)



66382
Lower Door Guide (4)



66183
Roof Trim Cap
(2 right & 2 left)

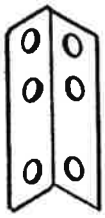

5971
Roof Beam Bracket (4)

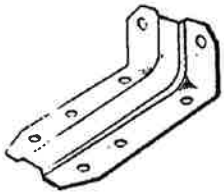

6228
Track Support (2)

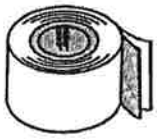

67545
Weather Stripping (1)

Parts List

YM12

Assembly Key No.	Part Number	Part Description	Quantity in Carton	Check List
1	6000	Right Gable	2	
2	6001	Left Gable	2	
3	10497	Horizontal Door Brace	4	
4	6529	Roof Panel	6	
5	6640	Right Roof Panel	2	
6	6641	Left Roof Panel	2	
7	10477	Right and Left Doors	2	
8	9370	Door Jamb	2	
9	9374	Front Wall Panel	2	
10	6627	Wall Panel	10	
11	6633	Corner Panel	4	
12	3719	Door Handle Brace	2	
13	6300	Vertical Door Brace	2	
14	6403	Door Track Splice	1	
15	6014	Side Roof Trim	2	
16	6015	Side Roof Trim	4	
17	6868	Ridge Cap	1	
18	6869	Ridge Cap	2	
19	9366	Door Track	2	
20	5986	Rear Wall Angle	2	
21	10389	Rear Wall Channel	2	
22	9365	Front Wall Channel	2	
23	10568	Roof Beam	8	
24	10390	Side Wall Channel	4	
25	10393	Side Wall Angle	4	
26	10392	Side Floor Frame	4	
27	8936	Rear Floor Frame	2	
28	9367	Front Floor Frame	2	
29	6635	Gable Brace	2	
30	8934	Ramp	1	
31	69835	Edge Trim (Green)	4	

Assembly by Key No.

SV13et

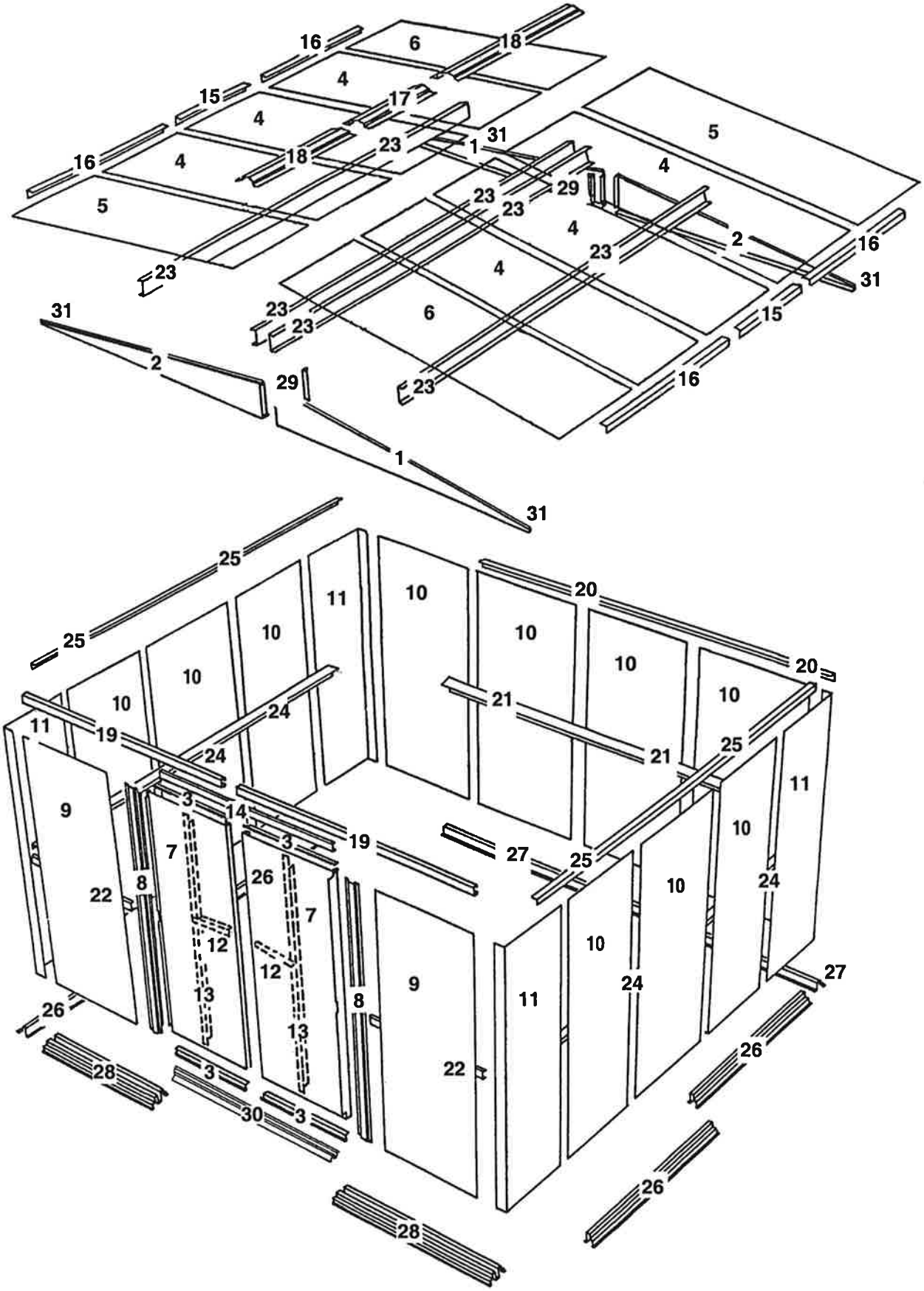

Step 1

SV14

● Parts Needed For ●

Floor Frame Assemblies

- **8934 Ramp (1)**
- **9367 Front Floor Frame (2)**
- **8936 Rear Floor Frame (2)**
- **10392 Side Floor Frame (4)**

The front floor frame is made up of three pieces. The side floor frames and the rear floor frame are made up of two pieces. The holes in these pieces will align when the pieces are positioned with correct amount of overlap. The illustrations below show the proper overall length for the sides, rear and front. Proceed as follows:

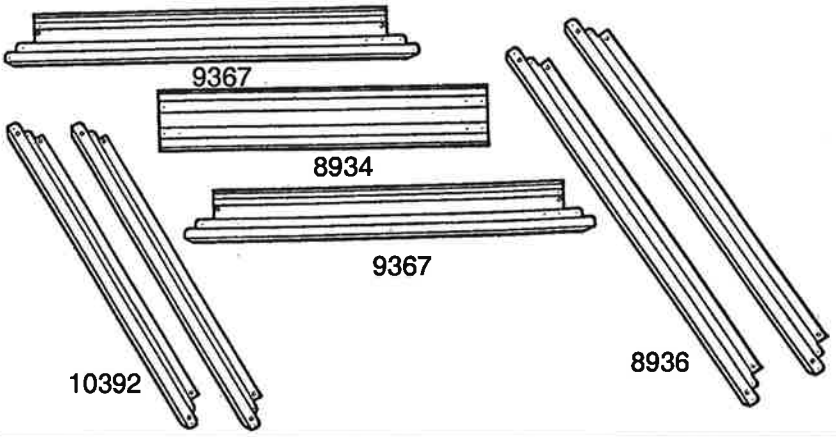

1 Place the **front floor frames** as shown. Center the **ramp,** with drain holes facing outside, on top of the two front floor frames. Join the frames by inserting eight screws.

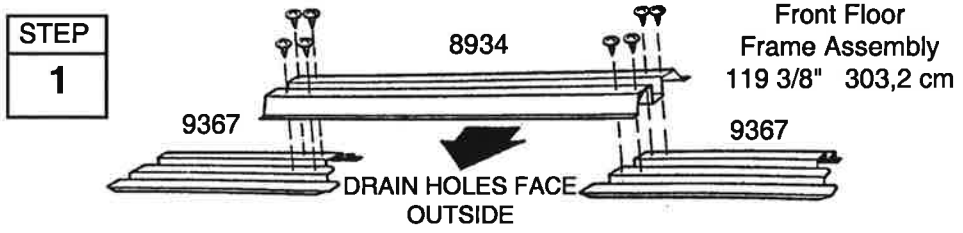

2 Overlap the **side floor frames** and the **rear floor frames** as shown. The holes in these pieces will align when the pieces are positioned with correct amount of overlap. See the illustrations below for the proper overall length of the side and rear floor frames. Join the frames by inserting four/five bolts into each frame set as shown.

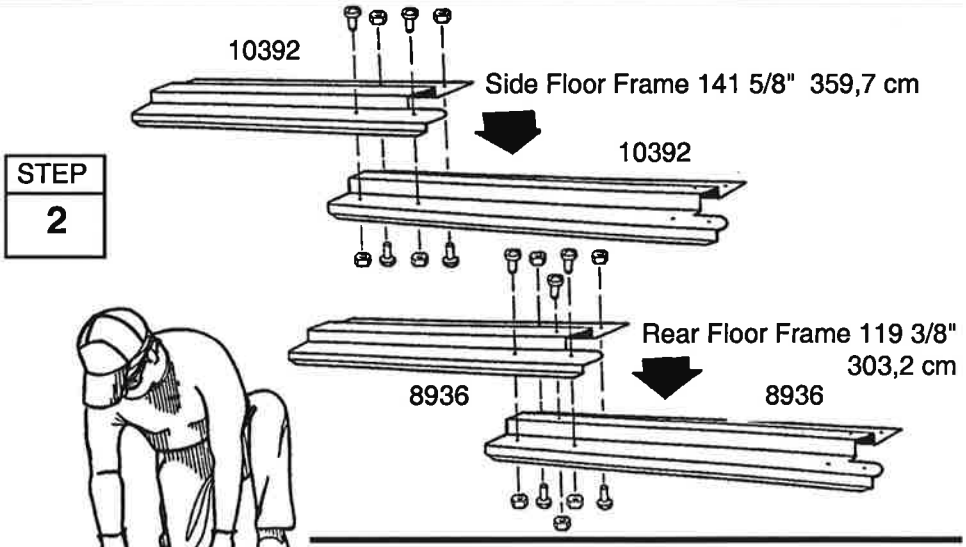

3 Double check the length of each and set these pieces aside for later use.

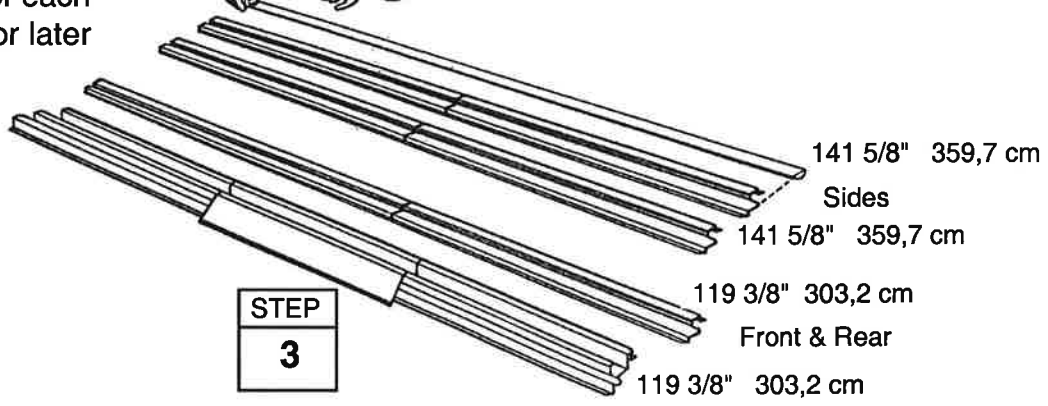

Step 2

SV15

● Parts Needed For ●
Frame Assemblies

- **5986 Rear Wall Angle (2)**
- **10389 Rear Wall Channel (2)**
- **10390 Side Wall Channel (4)**
- **10393 Side Wall Angle (4)**

The main frame pieces reinforce the walls. These pieces will later be installed in the center and at the top edge of the side walls and the rear wall. Proceed as follows:

1 Overlap the **rear wall channel** pieces as shown in the figure and fasten the two pieces together with *eight bolts* as shown.

2 Make two **side wall channels** by overlapping the side wall channel pieces as shown. Fasten each set together with *eight bolts* as shown.

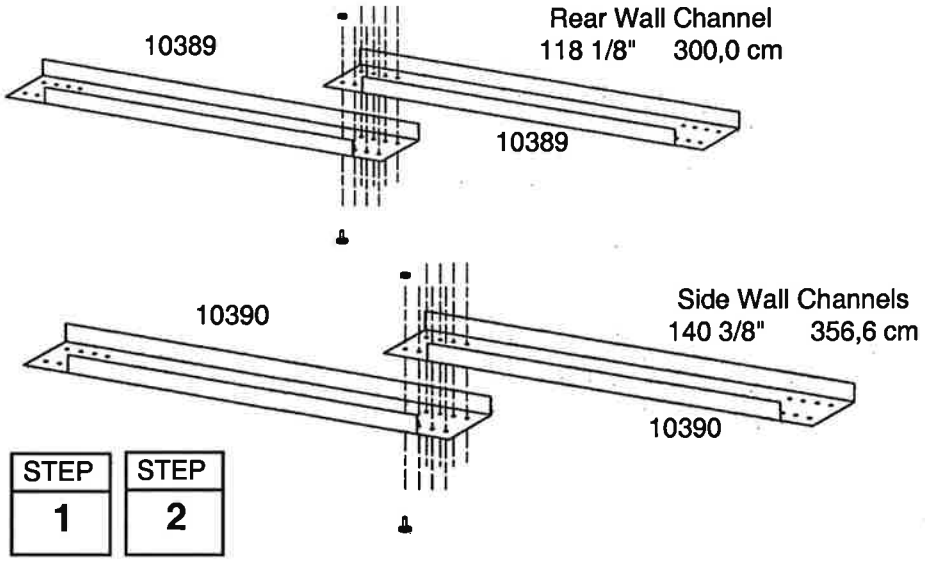

3 Overlap the **rear wall angle** pieces as shown in the figure and fasten them together with *one bolt in the center hole.*

4 Make two **side wall angles** by overlapping the side wall angle pieces as shown. Fasten each set together with *one bolt thru the large hole at the end of each part.*

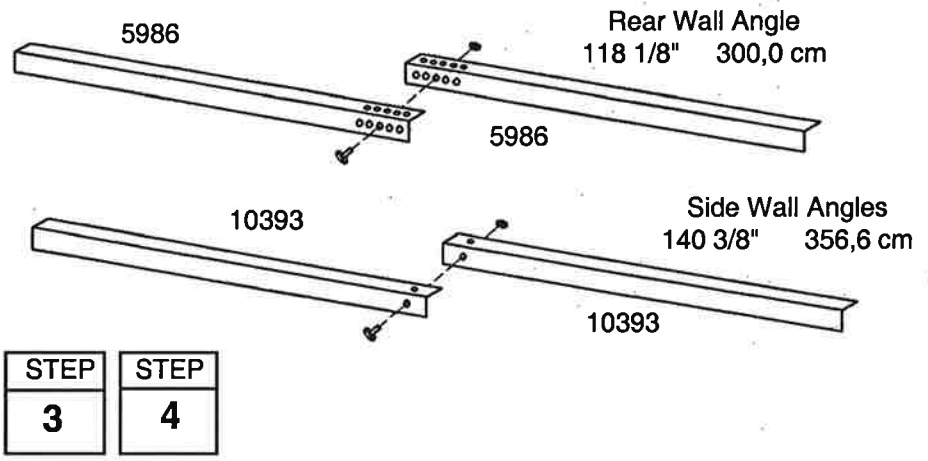

5 Double check the length of each and set these pieces aside for later use.

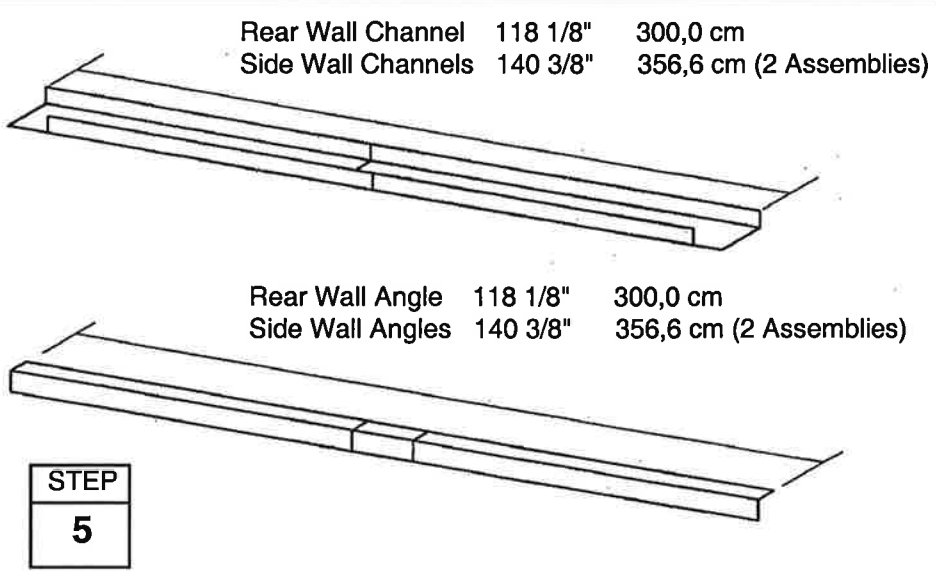

Step 3

YM16

● Parts Needed For ●

Roof Beam Assemblies

● **10568 Roof Beam (8)**

The roof beams join the two gables and support the roof panels. The main roof beam is made up of four pieces overlapped back to back at the center. The left and right roof beam assemblies are made up of two pieces.

Hint: These pieces are force-fitted, so you may have to press hard to join them together.

1 Place the end of one roof beam inside a second roof beam so that the six holes in each piece align. Make four sets of roof beams by repeating this procedure. ***Do not insert bolts yet.***

2 Take two of the pressed-together roof beams and join them as shown to form the main roof beam assembly. Hold the assembly together and fasten with 14 bolts. Build ***only one*** Doubled Beam Assembly.

3 Fasten the other two pressed-together roof beams with eight bolts to make the left and right roof beam assemblies.

4 Double check the length of each and set these pieces aside for later use.

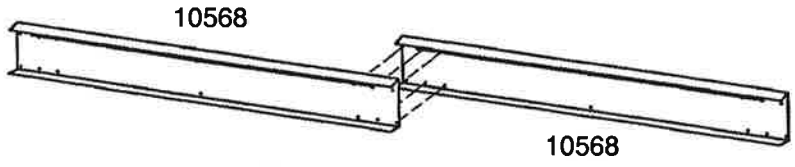

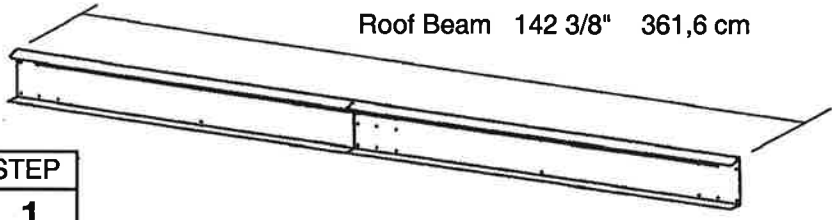

Roof Beam 142 3/8" 361,6 cm

STEP 1

STEP 2

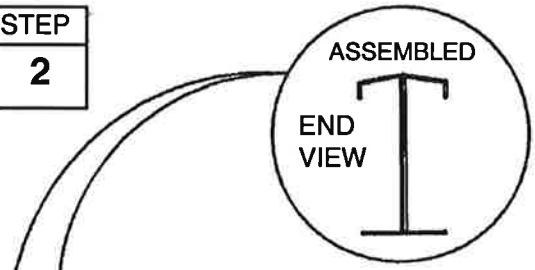

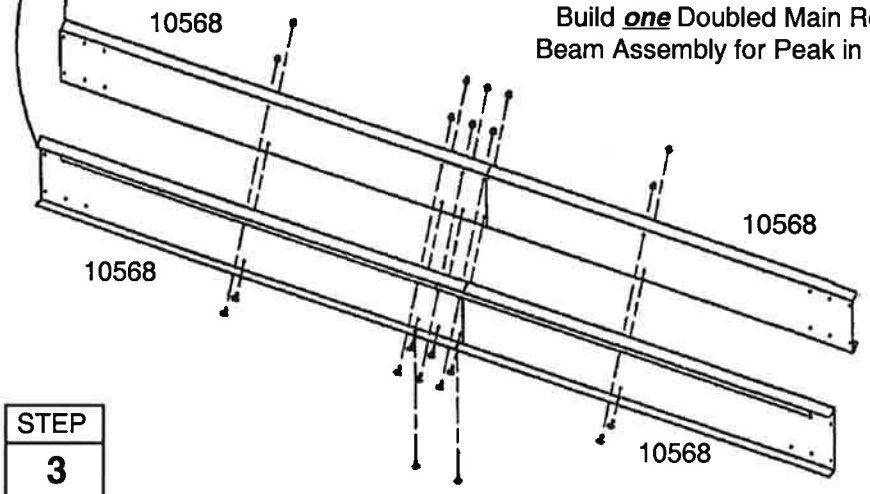

Build ***one*** Doubled Main Roof Beam Assembly for Peak in Roof

STEP 3

142 3/8" 361,6 cm

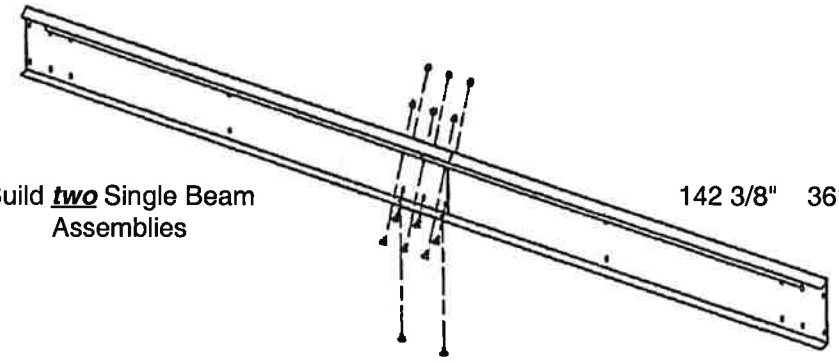

Build ***two*** Single Beam Assemblies

142 3/8" 361,6 cm

Step 4

A17

● Parts Needed For ●

Door Track Assembly

- **6403 Door Track Splice (1)**
- **9366 Door Track (2)**

The door track assembly supports the sliding doors and reinforces the front wall. It is made up of three pieces.

1 Using the **door track splice,** (painted), join the **door track** (galvanized) pieces end-to-end as shown.

2 Insert four screws *from the underside only.*

Hint: The holes in the top side of the door track assembly are for fastening the gable to the top of the front wall in a later step.

NOTE:
Door Track Splice (painted part)

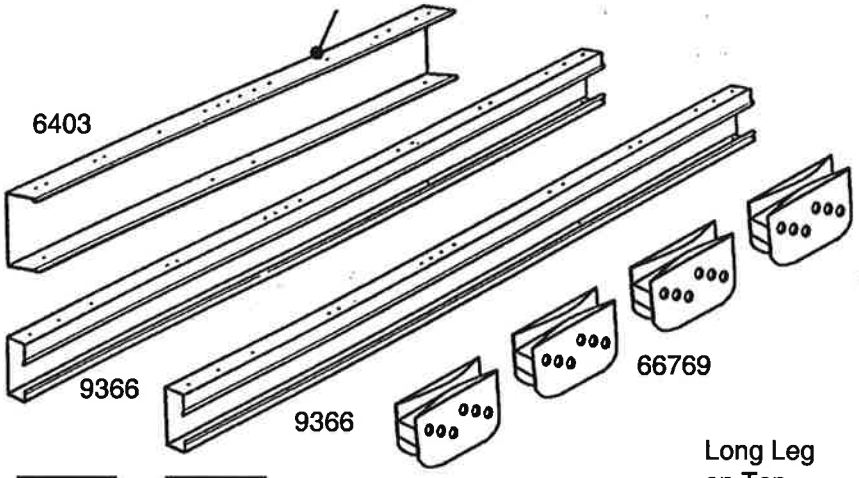

STEP 1 STEP 2

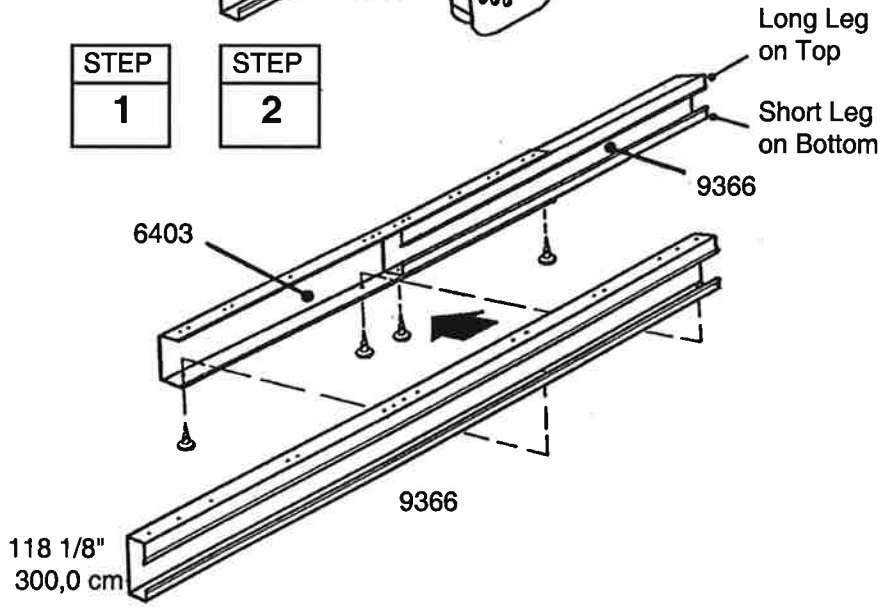

3 Position **door slides** onto the legs, from the end of door track assembly, as shown in the end view.

4 Set this piece aside for later use.

STEP 3 STEP 4

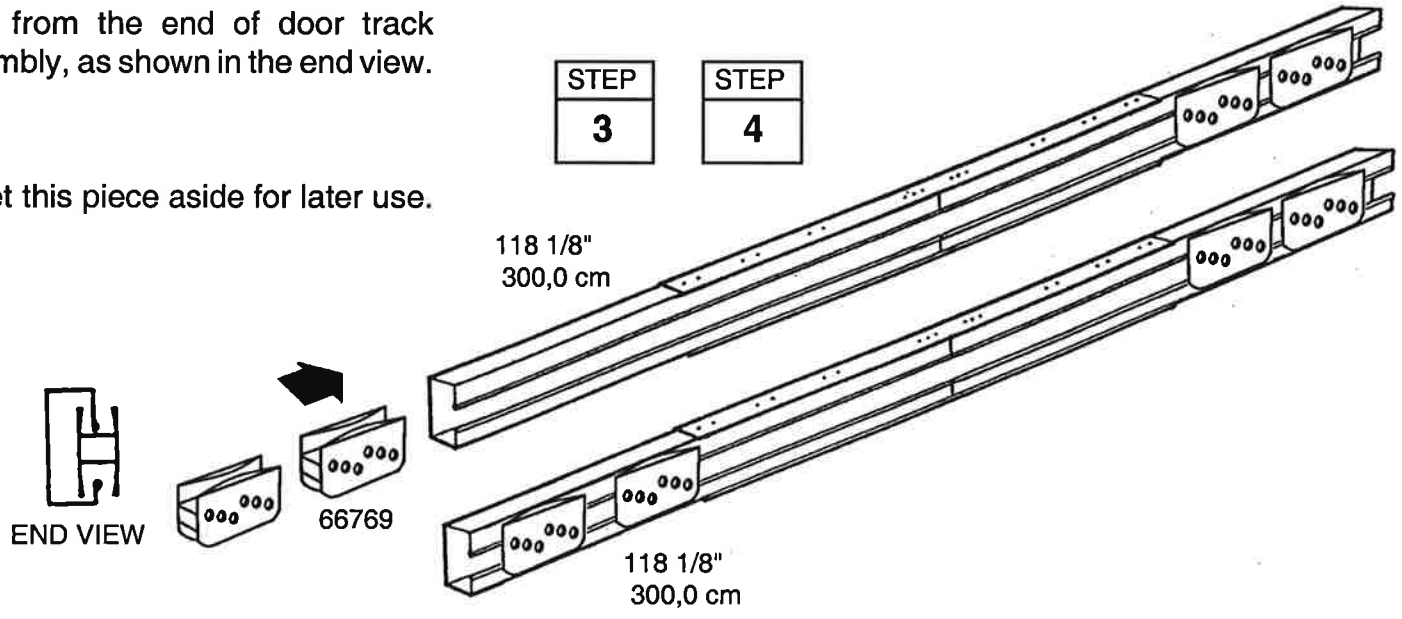

Step 5
SW18

● Parts Needed For ●
Floor Frame

- **Front Floor Assembly (1)**
- **Side Floor Assembly (2)**
- **Rear Floor Assembly (1)**

1 Assemble the four corners of the floor frame using two screws at each corner as shown. At the front corners fasten bolts through from the bottom with nuts on top.

STEP 1

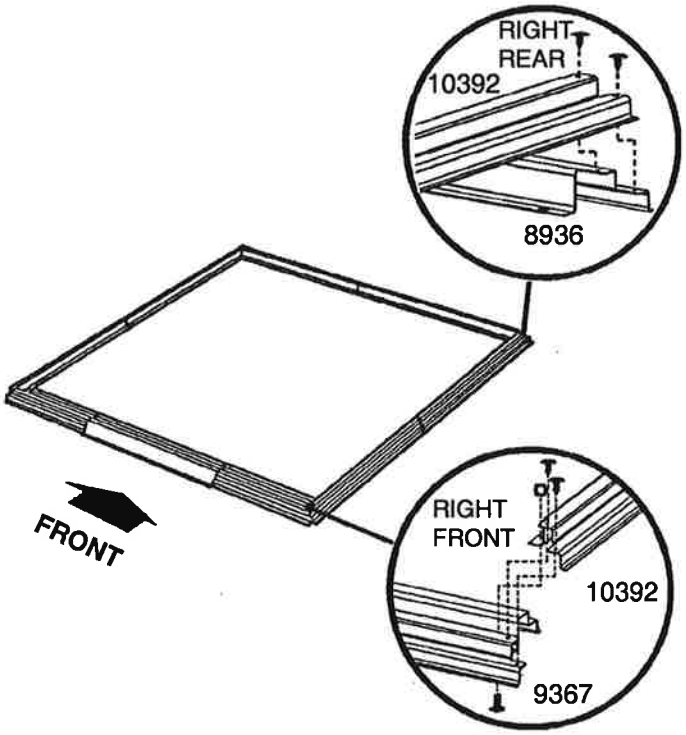

2 Measure the floor frame diagonally. When the diagonal measurements are equal, the floor frame is square.

When Diagonal Measurements are Equal the Floor Frame is Square.

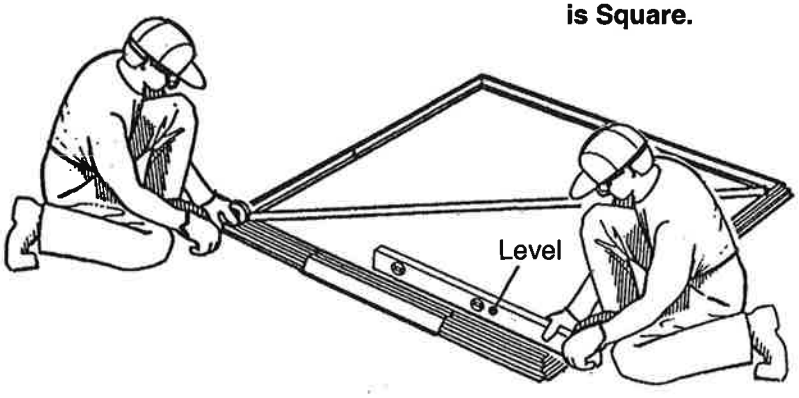

STEP 2

NOTE
If using a wood platform or concrete slab do not fasten the floor frames to your base at this time. You will anchor the building after it is erected.

The floor frame *must be square and level* or holes will not align.

Step 6
SQ19

● Parts Needed For ●
Corners

- **6627 Wall Panel (2)**
- **9374 Front Wall Panel (2)**
- **6633 Corner Panel (4)**

NOTE
The remainder of the building assembly requires many hours and more than one person. Do not continue beyond this point if you do not have enough time to complete the assembly today. A partially assembled building can be severely damaged by light winds.

Each screw and bolt in the wall requires a washer.


CORRECT


INCORRECT

1 Position a **corner panel** at the corner of the floor frame as shown. The widest part of each corner panel must be placed along the side of the building for all four corners. Fasten the corner panel to the floor frame with four screws.

Support the corner panel with a step ladder until a wall panel is attached.

2 Attach the **front wall panels** to the front corner panels, as shown. A small gap will exist between front wall panel and ramp.

3 Attach the **wall panels** to the rear corner panels, as shown.

NOTE
Be careful to install the correct panel in each position as shown

4 Double-check the part numbers of the wall panels, before proceeding.

The floor frame *must be square and level* or holes will not align.

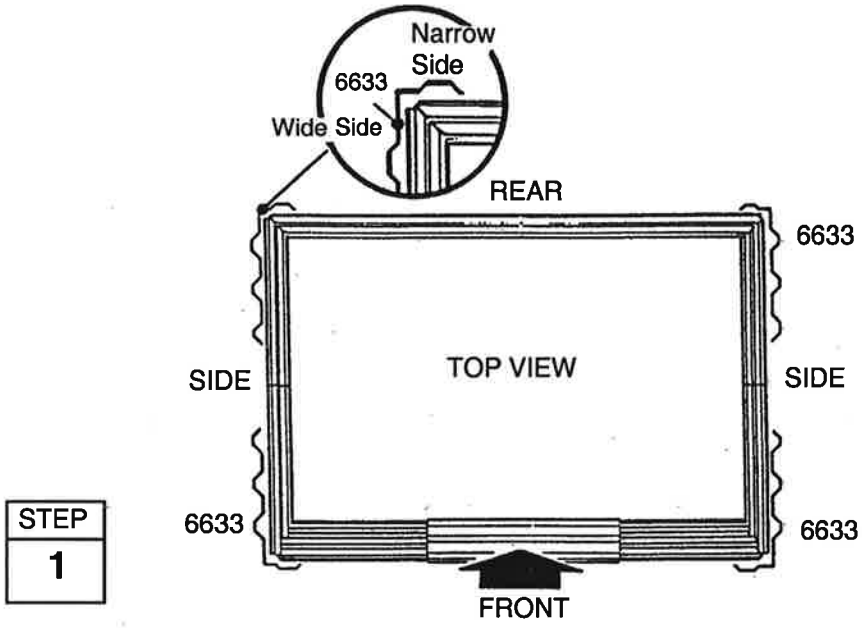

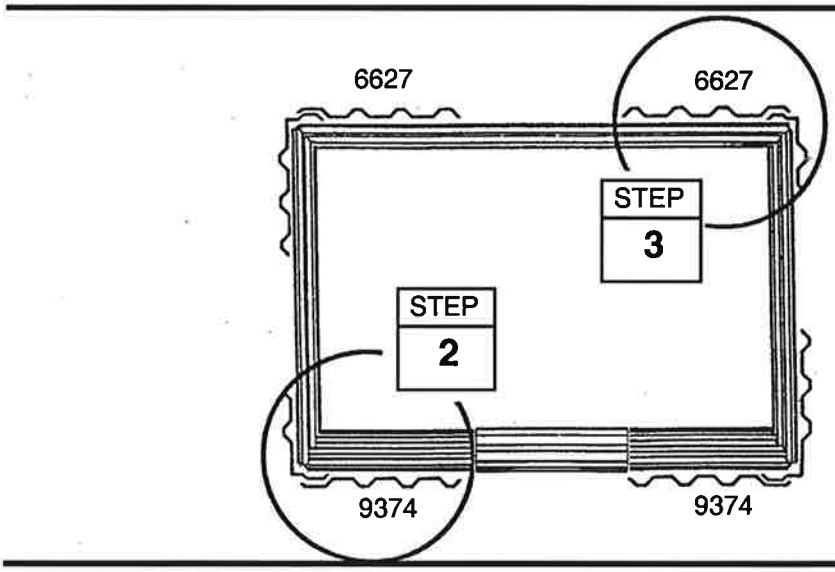

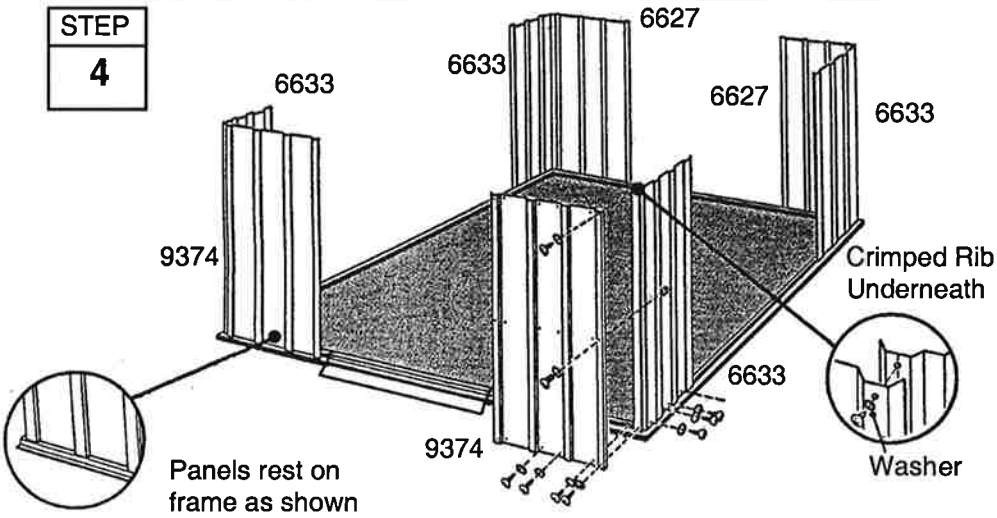

Step 7

SR20

● Parts Needed For ●

Mid Frames

- **Rear Wall Channel Assembly (1)**
- **Side Wall Channel Assembly (2)**

The mid frame pieces give rigidity to the side and rear walls.

1 Fasten the **rear wall channel** across the middle of the rear wall using screws.

2 Fasten the **side wall channels** across the middle of the side panels using screws. Fasten overlaps in rear corners with bolts and nuts, at two locations. See the figure.

NOTE
The wall channels behind the front wall panels will be installed in a later step.

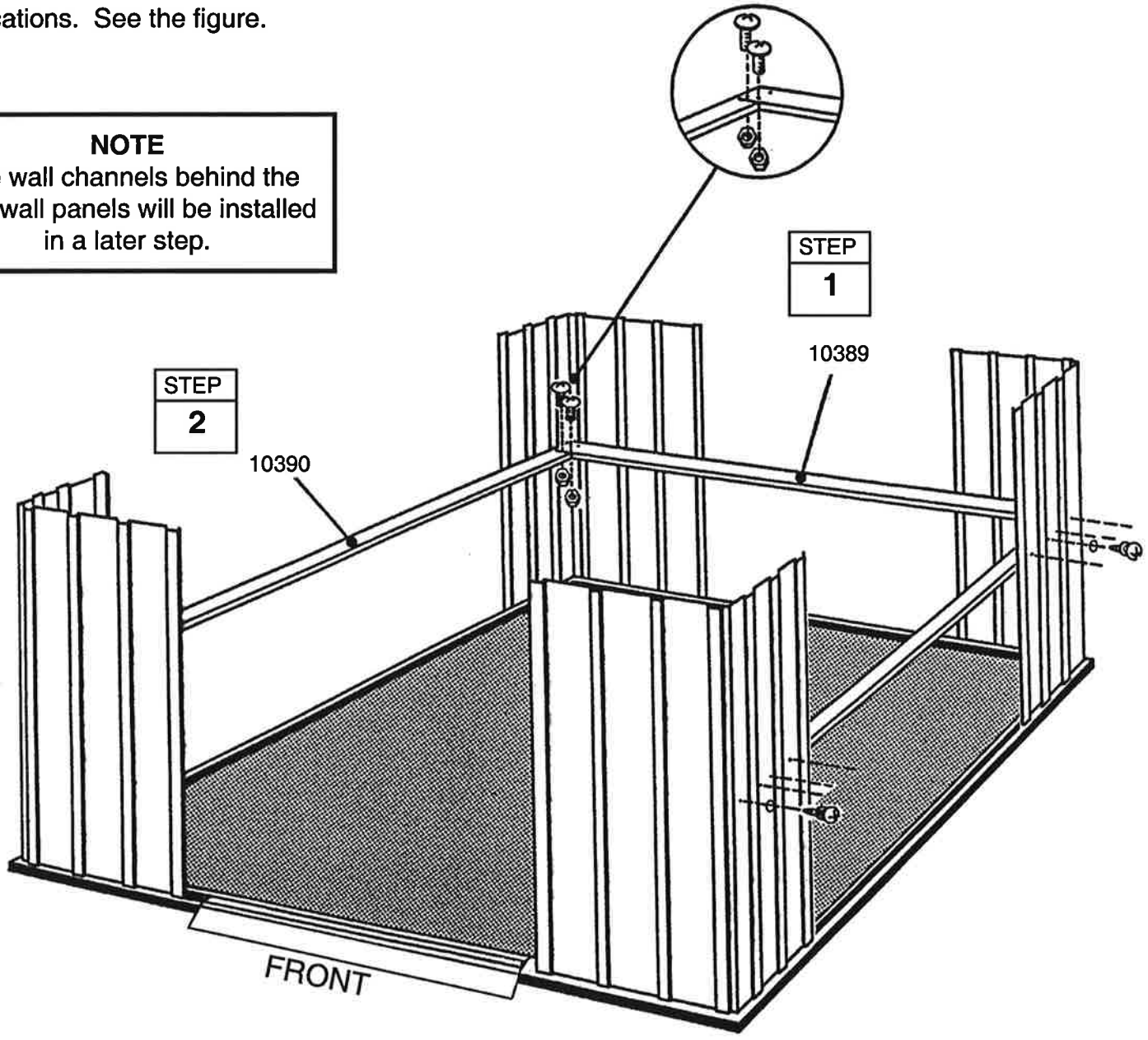

Step 8

SQ21

● Parts Needed For ●

Top Frames

- **Door Track Assembly (1)**
- **Rear Wall Angle Assembly (1)**
- **Side Wall Angle Assembly (2)**

The top frame pieces give rigidity to the walls and provide a surface for attaching the gables which support the roof.

1 Fasten the **rear wall angle** across the inside top of the rear wall using screws.

2 Fasten the **side wall angles** across the inside top of the side panels using screws. Side wall angles must overlap rear wall angle in corners.

3 Fasten the **door track assembly** (holes on top) across the top of the front wall panels using screws. See the figure.

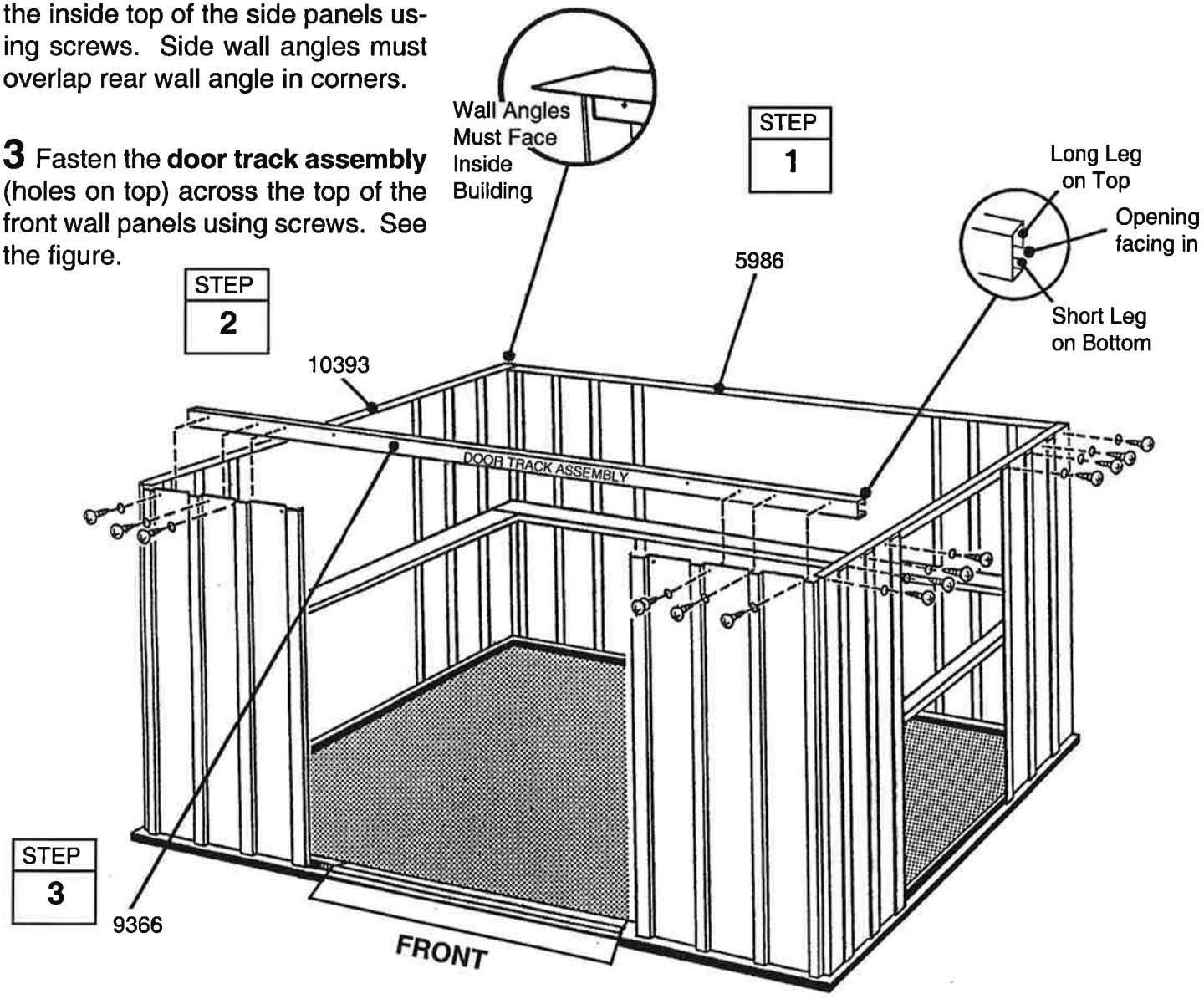

Step 9

SZ22

● Parts Needed For ●

Wall Panels

● **6627 Wall Panel (8)**

Each wall panel has a crimped rib on one side. The crimped rib should go under the rib of the panel that follows it.

1 Locate all of the **wall panels** and set each one alongside the building.

2 Fasten the wall panels at the top and bottom with screws.

3 Fasten the center of each panel to the wall channel with screws.

4 Fasten overlapping ribs as before.

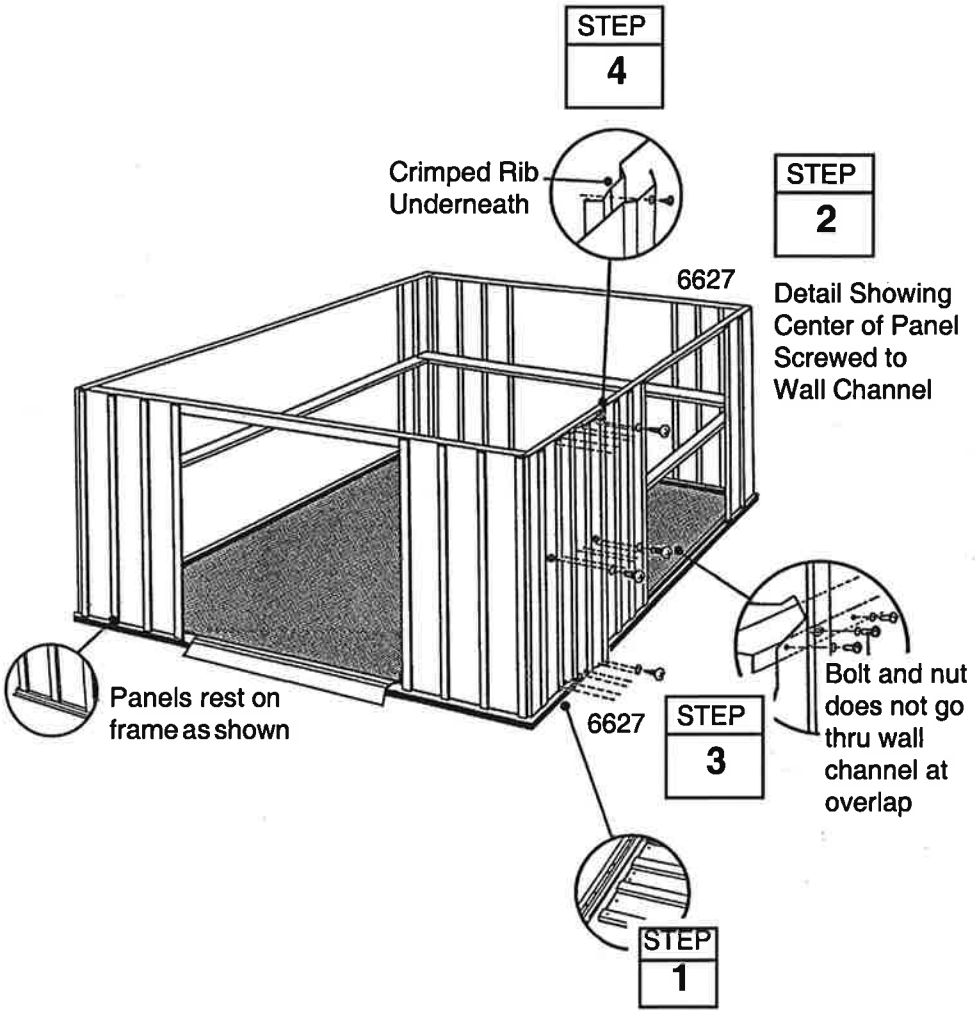

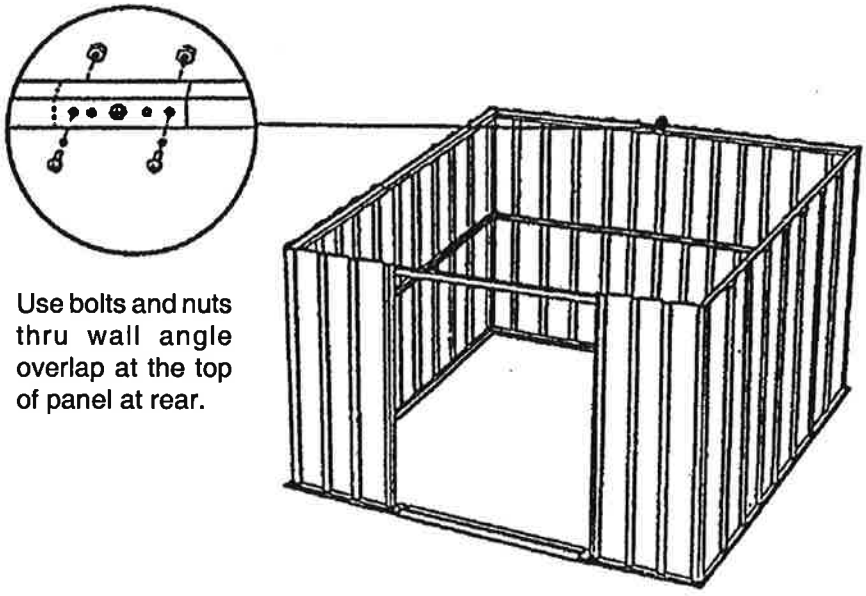

Use bolts and nuts thru wall angle overlap at the top of panel at rear.

Step 10

SZ23

● Parts Needed For ●

Front Channel/Door Jamb

- **9370 Door Jamb (2)**
- **9365 Front Wall Channel (2)**

The door jambs reinforce the door opening and provide an attractive trim. Follow these steps for both door jambs.

1 Fasten the **front wall channels** in their positions between the end of the side wall channel and the corner panel using screws. Do not put a screw in the hole at the end behind the door opening at this time.

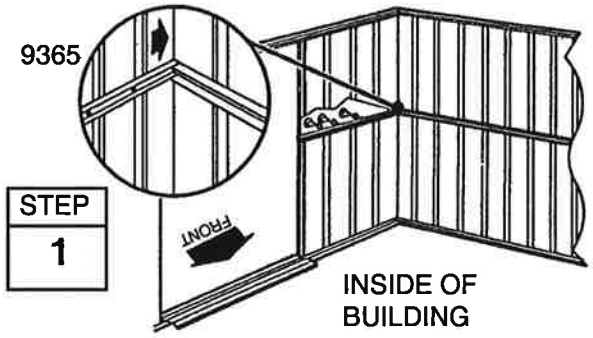

2 Fasten a **door jamb** to the front panel with two bolts, nuts and acorn nuts, as shown.

3 Fasten the center of the door jamb to the front wall panel and the front wall channel with two screws.

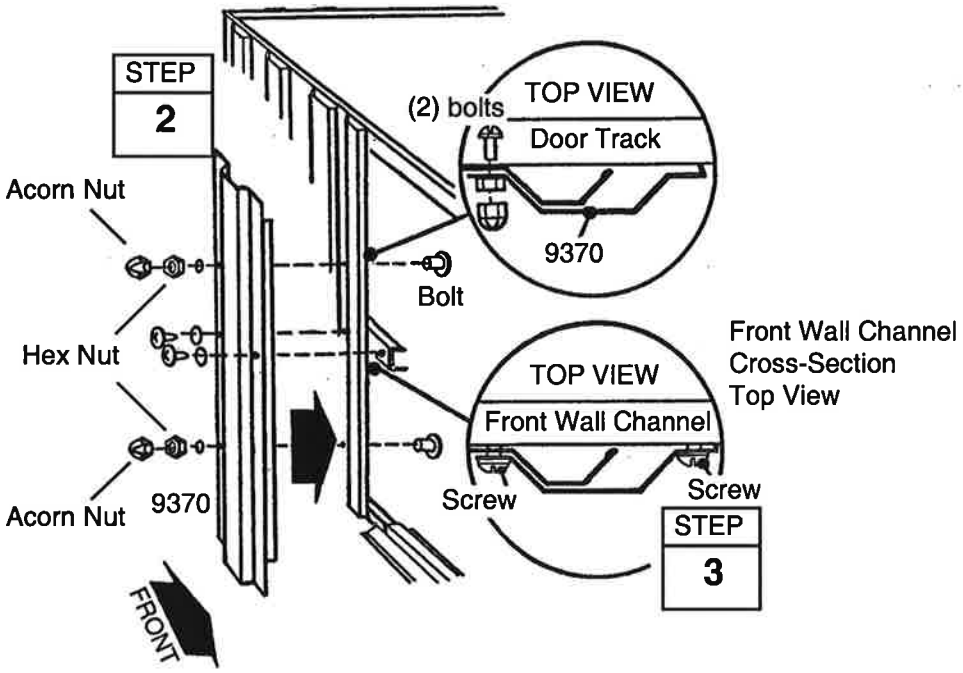

4 Fasten the top of the door jamb to the door track with two screws. Do the same for the bottom into frame.

Repeat steps 2 through 4 for the *opposite* door jamb.

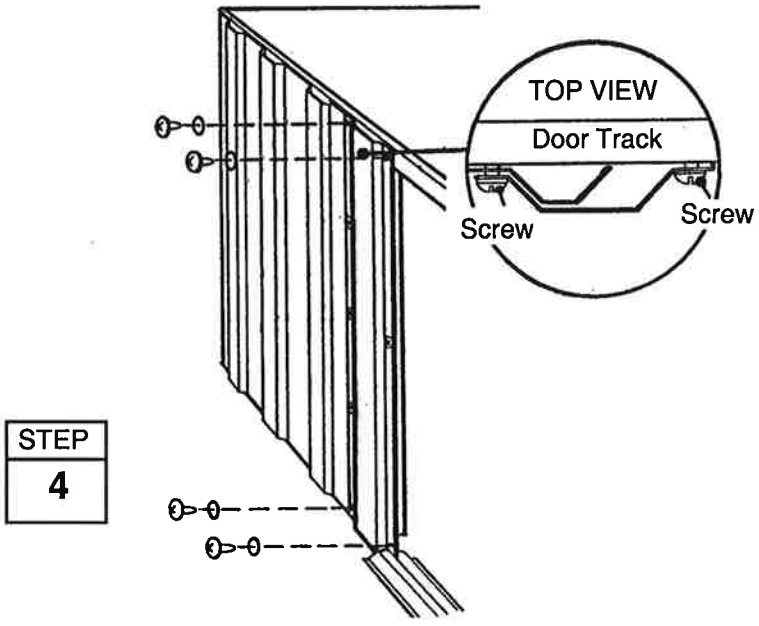

Step 11

SQ24et

● Parts Needed For ●

Gable Assemblies

- **6000 Right Gable (2)**
- **6001 Left Gable (2)**
- **5971 Roof Beam Bracket (4)**

The gables go on top of the front and rear walls to support the roof beams.

NOTE
The gables are packed nested together and might be mistaken as one piece. Carefully separate them before continuing.

1 Apply **edge trim** to the top edge of the **right gables** and **left gables**.

2 Attach the four **roof beam brackets** to the gables using two bolts, washers and nuts.

NOTE
Mounting leg of bracket must face toward center of gable and holes closest together must be on top

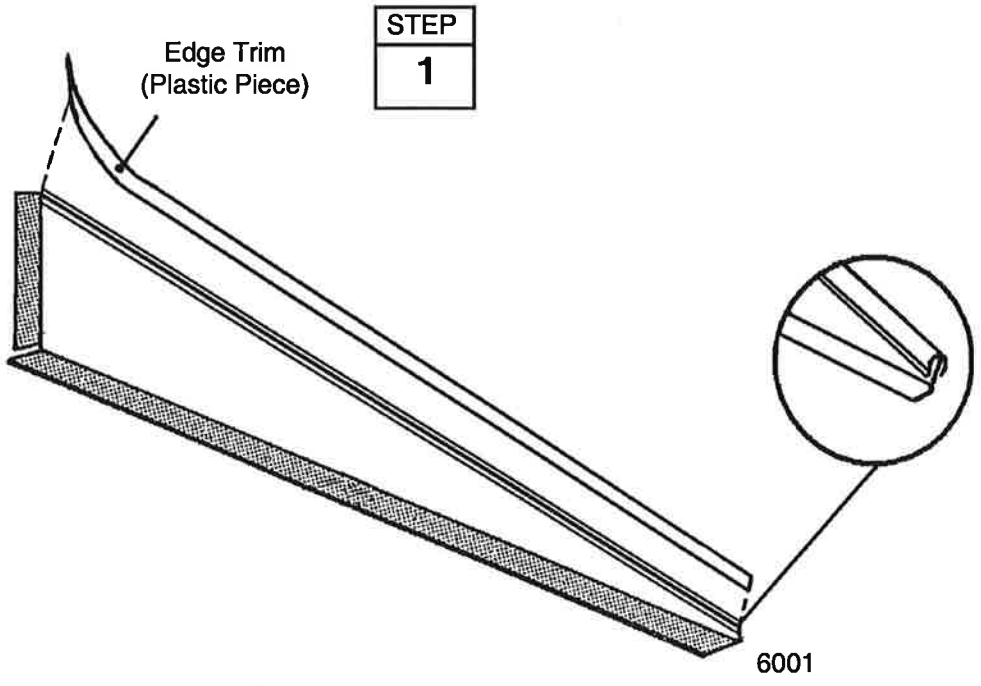

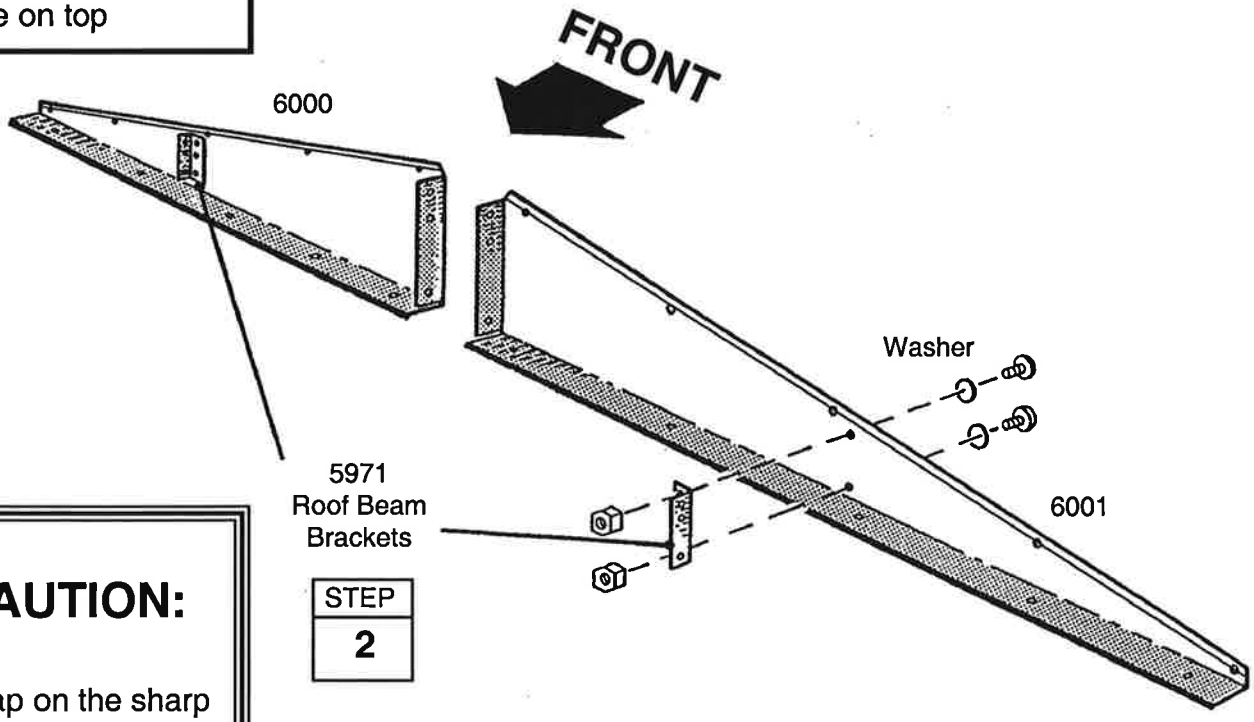

CAUTION:

To avoid mishap on the sharp edge the edge trim must remain in place on the top edge of the gable until right and left roof panels are in place.

Step 12

SQ25

● Parts Needed For ●
Gables/Braces

- **Left Gable Assemblies (2)**
- **Right Gable Assemblies (2)**
- **6635 Gable Brace (2)**

1 Lift and fasten a right and left gable, under angle at corner, to the door track and rear wall angle with screws.

Hint: On the front gable, leave out 2 screws closest to center gable leg. On the rear gable, use a bolt and nut at the overlapping rear wall angle.

2 Join the **left** and **right gables** together with a **gable brace** using a bolt and nut in the bottom hole *only.*

3 Repeat Steps 1 & 2 for the door track on the front of building, except for the **track supports,** fasten as shown.

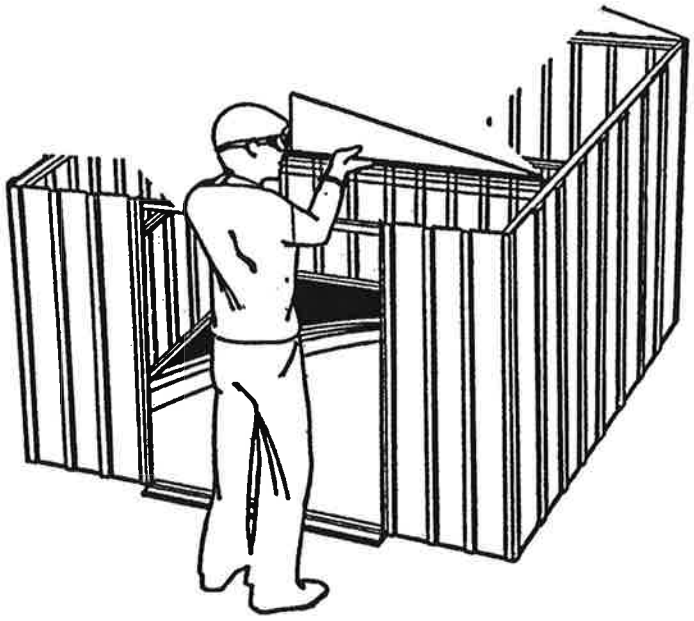

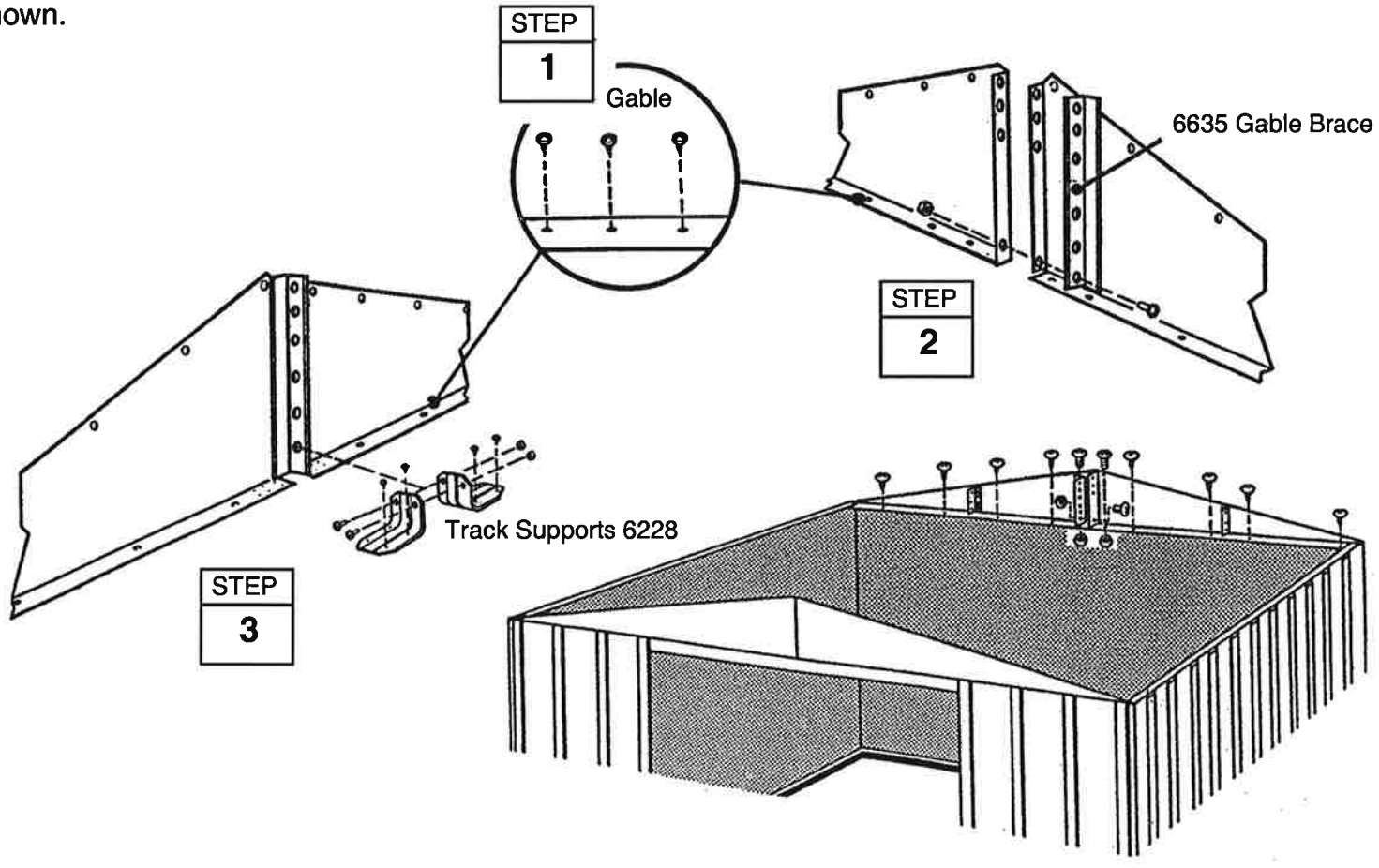

Step 13

SQ26

● Parts Needed For ●

Roof Beams

- **Main Roof Beam Assembly (1)**
- **Single Roof Beam Assemblies (2)**

1 Spread the two halves of the double roof beam and fasten to the gable brace of the front gable.

2 Fasten the other end of the double roof beam to the gable brace of the rear gable.

3 Fasten the single **roof beams,** *small holes on top,* as shown using bolts and nuts.

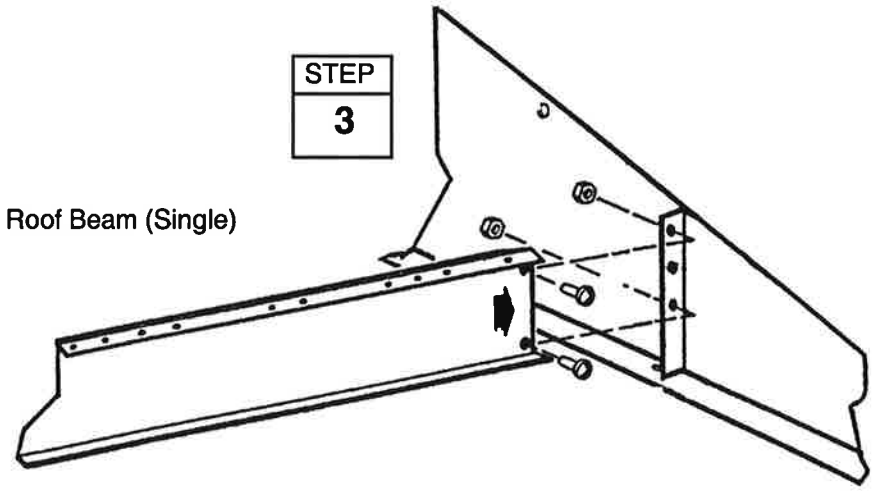

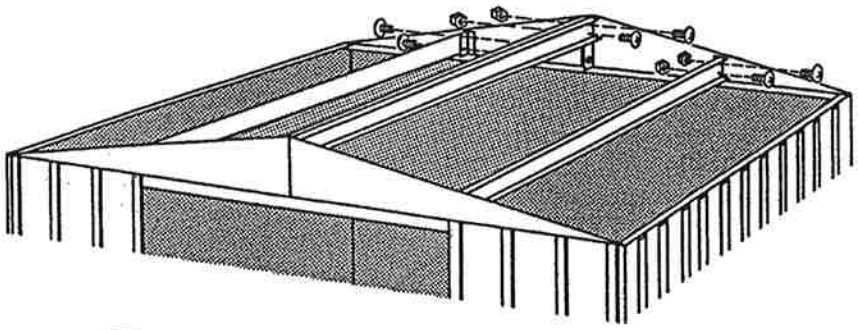

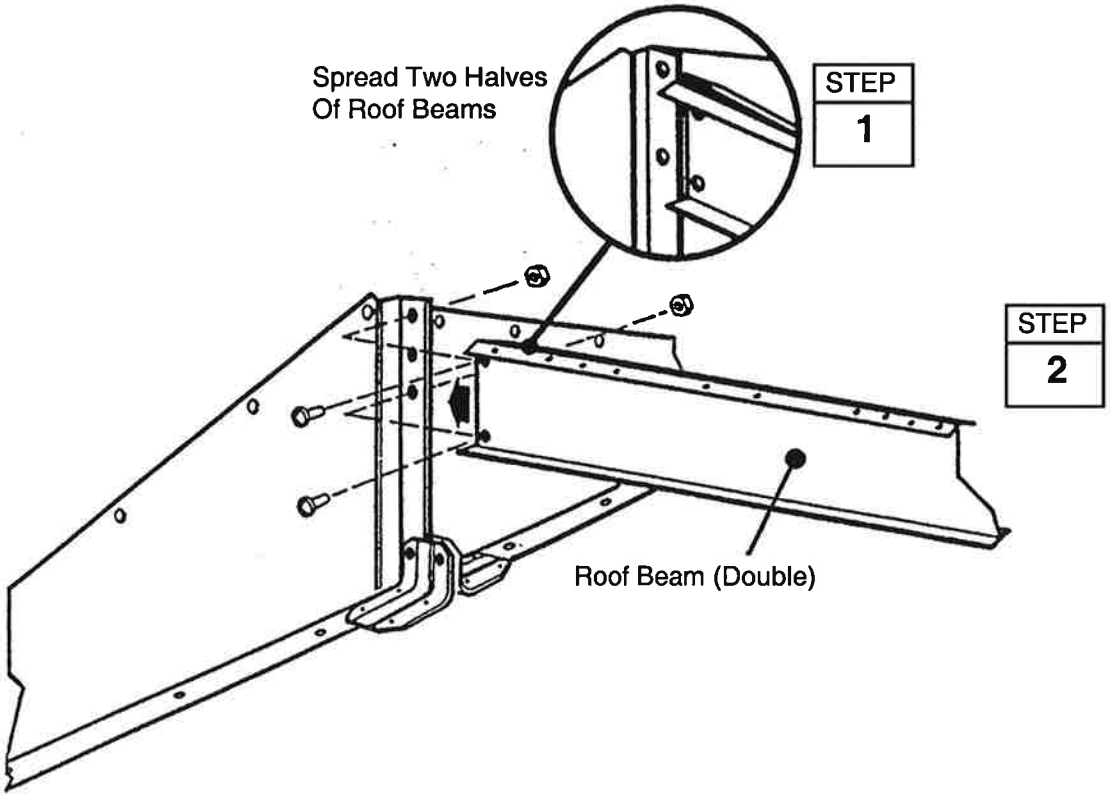

Step 14

SQ27et

● Parts Needed For ●

Right Roof Panel

● **6640 Right Roof Panel (1)**

Installing the roof panels is best done with a step ladder. Begin installing roof panels at the back right corner of the building. Each screw and bolt in the roof requires a washer.

NOTE

Measure the building diagonally again and make adjustments to make sure the building is square and level. This will make the roof panels fit better, and holes will align. Don't anchor the floor frame.

NOTE

If a **Roof Beef-Up Kit** was purchased, assemble prior to attaching the roof panels.

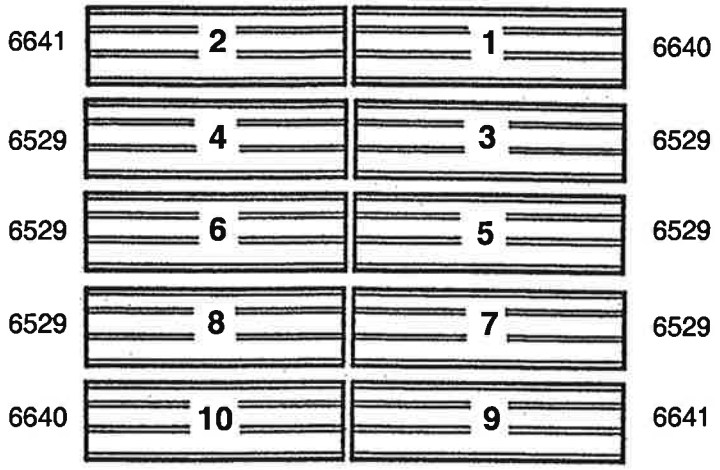

STEP 1

STEP 2 | STEP 3 | STEP 4

1 Locate all the roof panels by their numbers and place them on the ground alongside the building in their proper positions.

2 Position a **right roof panel** at the back right corner and fasten to the top roof beam using screws.

3 Remove edge trim from the left gable under the roof panel.

4 Continue fastening the right roof panel to the gable and lower roof beam using screws, bolts and nuts as shown. Do not fasten the lower end of the panels to the side wall angles at this time.

Hint: Follow the fastener sequence shown for proper alignment.

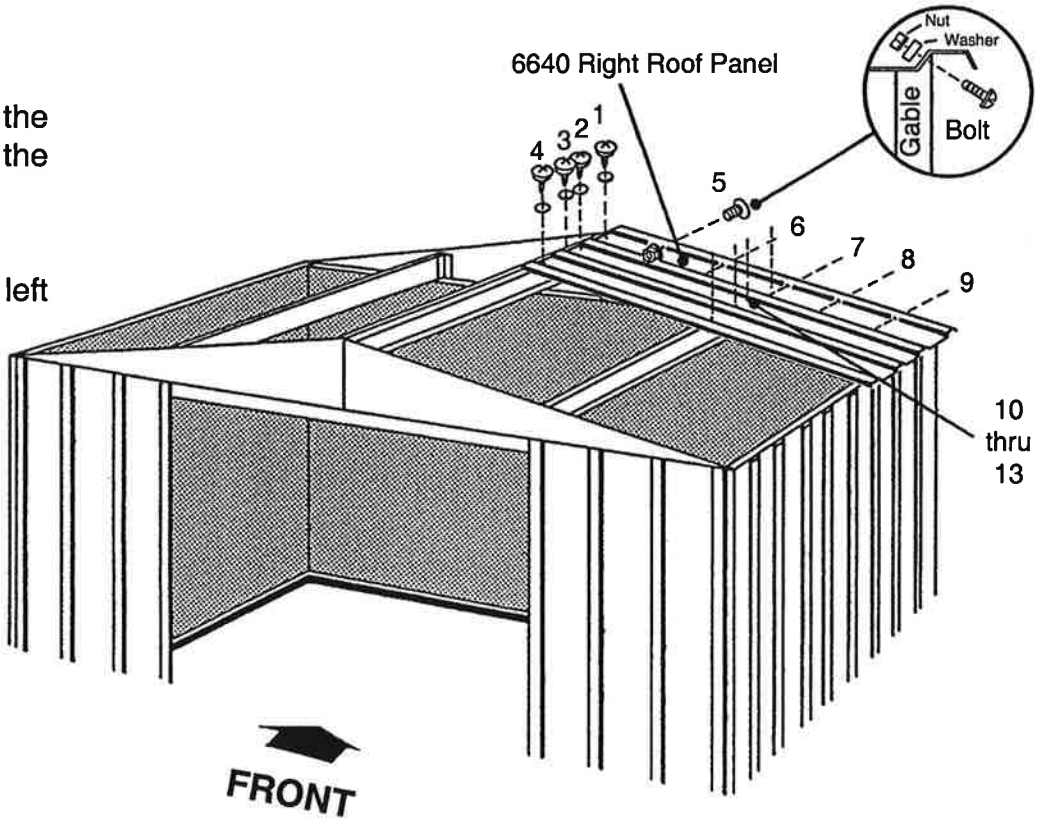

Step 15

SQ28

● Parts Needed For ●
Roof Assembly

- **6641 Left Roof Panel (1)**
- **6529 Roof Panel (2)**
- **6869 Ridge Cap (1)**

1 Install a **left roof panel** at the left rear corner of the roof.

2 Install two **roof panels** in the sequence shown on previous page. Follow fastener sequence while fastening roof panels.

NOTE
Narrow roof panel rib (with bead on it) is always overlapped by wide rib of adjacent panel

3 Cover the joint at the peak with weather stripping tape. Unroll the tape and press it down over the opening at the ridge as you install each roof panel. Do not cut the tape until entire roof is completed.

4 Install one **ridge cap 6869** on the roof section using bolts and nuts.

5 Fasten the roof panel ribs, **peak cap** and ridge cap together using bolts and nuts.

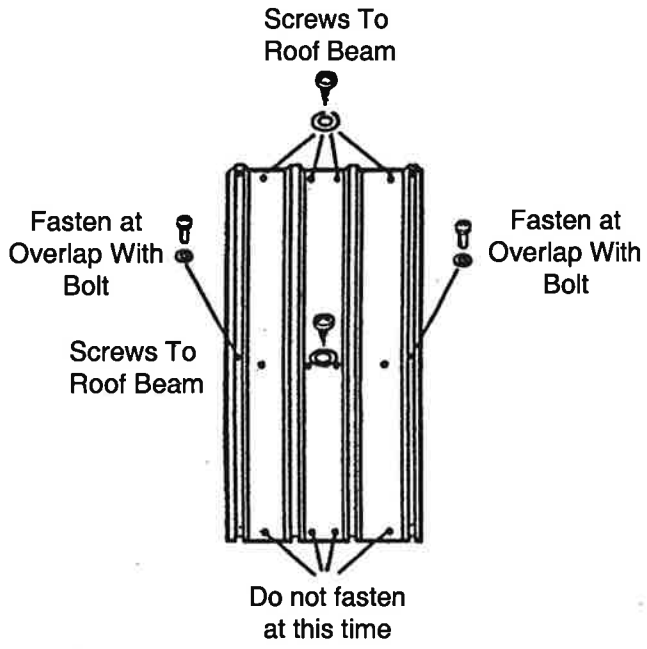

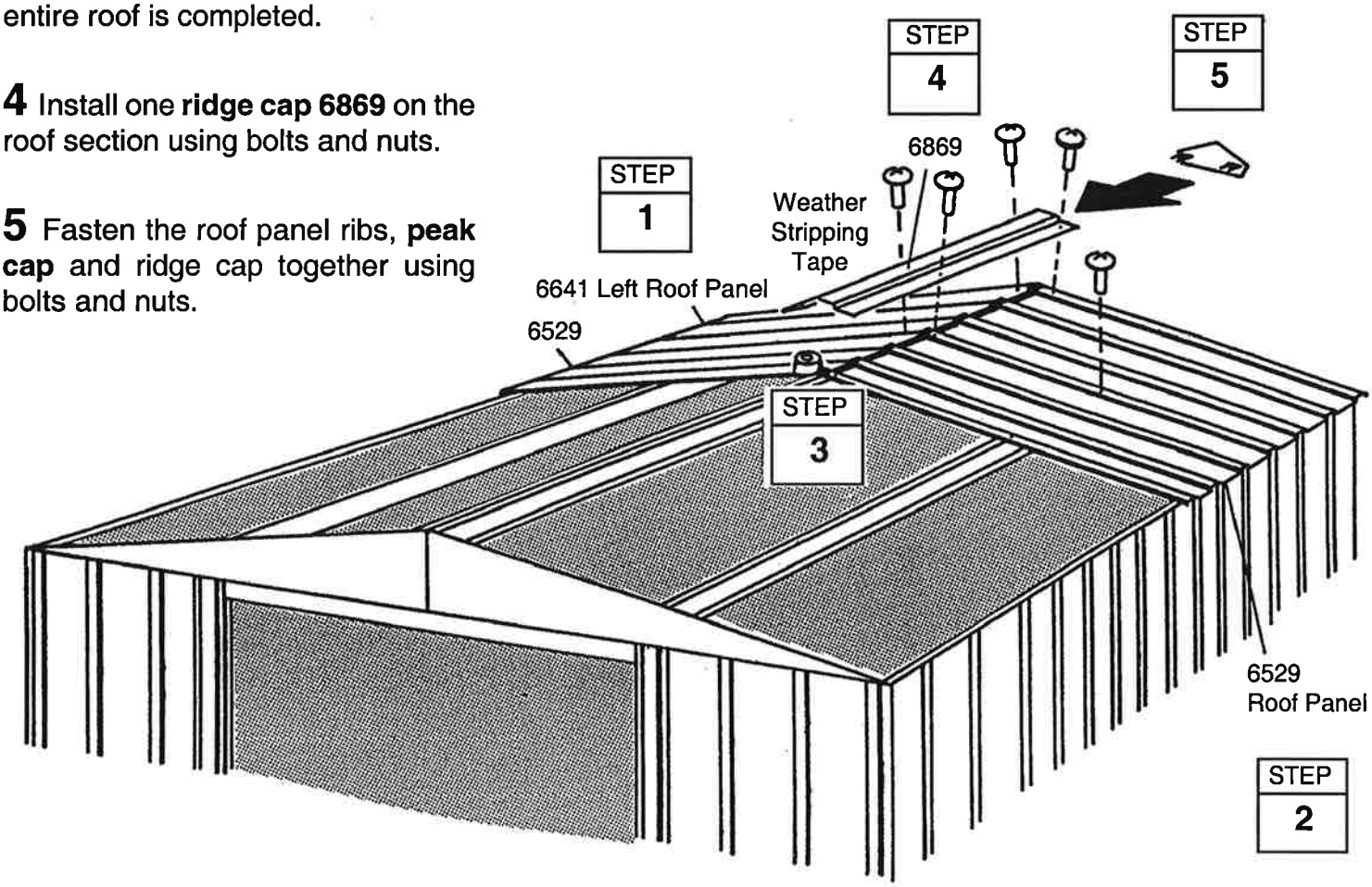

Step 16
SQ29

● Parts Needed For ●
Roof Assembly

- **6529 Roof Panel (2)**
- **6868 Ridge Cap (1)**

1 Install two **roof panels** as you unroll the weather stripping tape, and press it down, install the second **ridge cap 6868** overlapping the first ridge cap. Align the holes and fasten using bolts and nuts.

NOTE
If roof beam holes do not line up with the roof panel holes, shift the building from left to right.
If this does not help, your building may not be level. Shim the corners until holes line up.

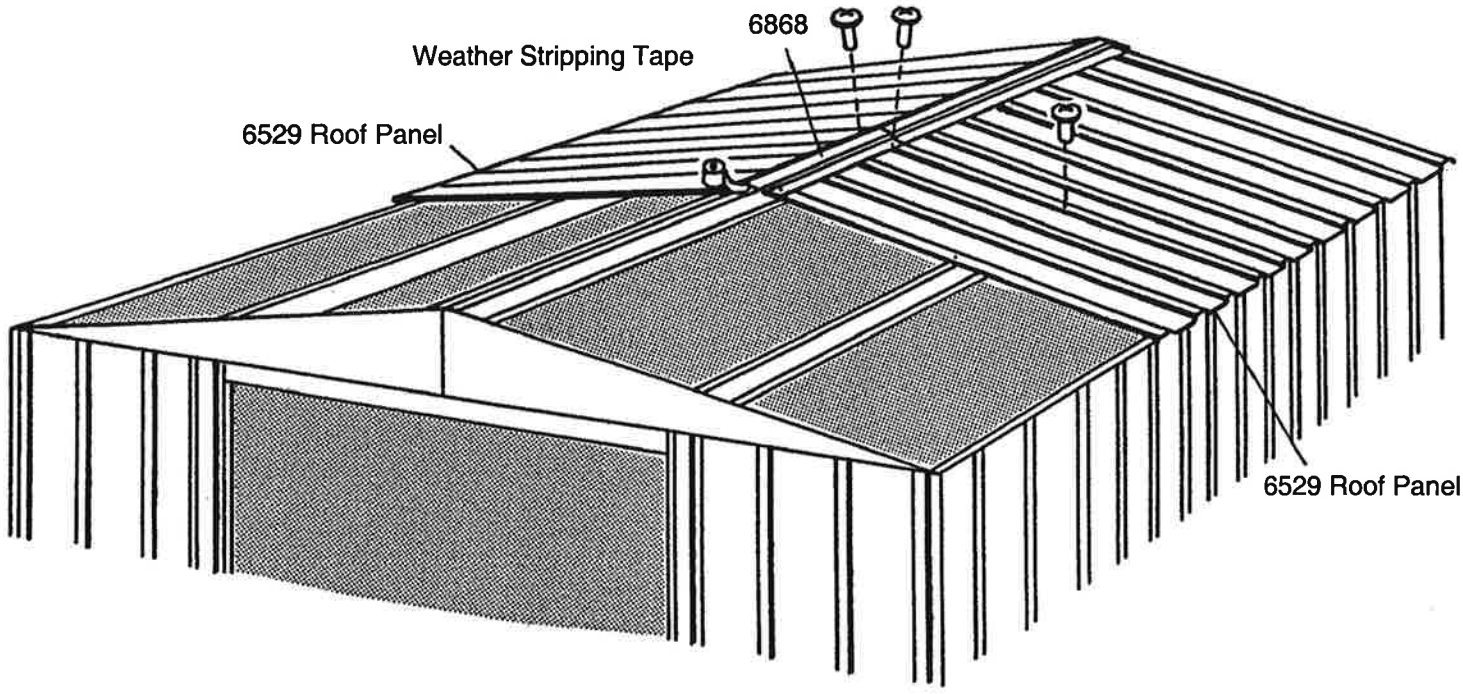

Step 17

SQ30

● Parts Needed For ●
Roof Assembly

- **6529 Roof Panel (2)**
- **6641 Left Roof Panel (1)**
- **6869 Ridge Cap (1)**
- **6640 Right Roof Panel (1)**

1 Install two **roof panels, left roof panel, ridge cap 6869** and **right roof panel** on the front of the roof as before.

2 Fasten the roof panel ribs, **peak cap** and ridge cap together using bolts and nuts.

3 Fasten the lower end of the panels to the side wall angles using screws and washers.

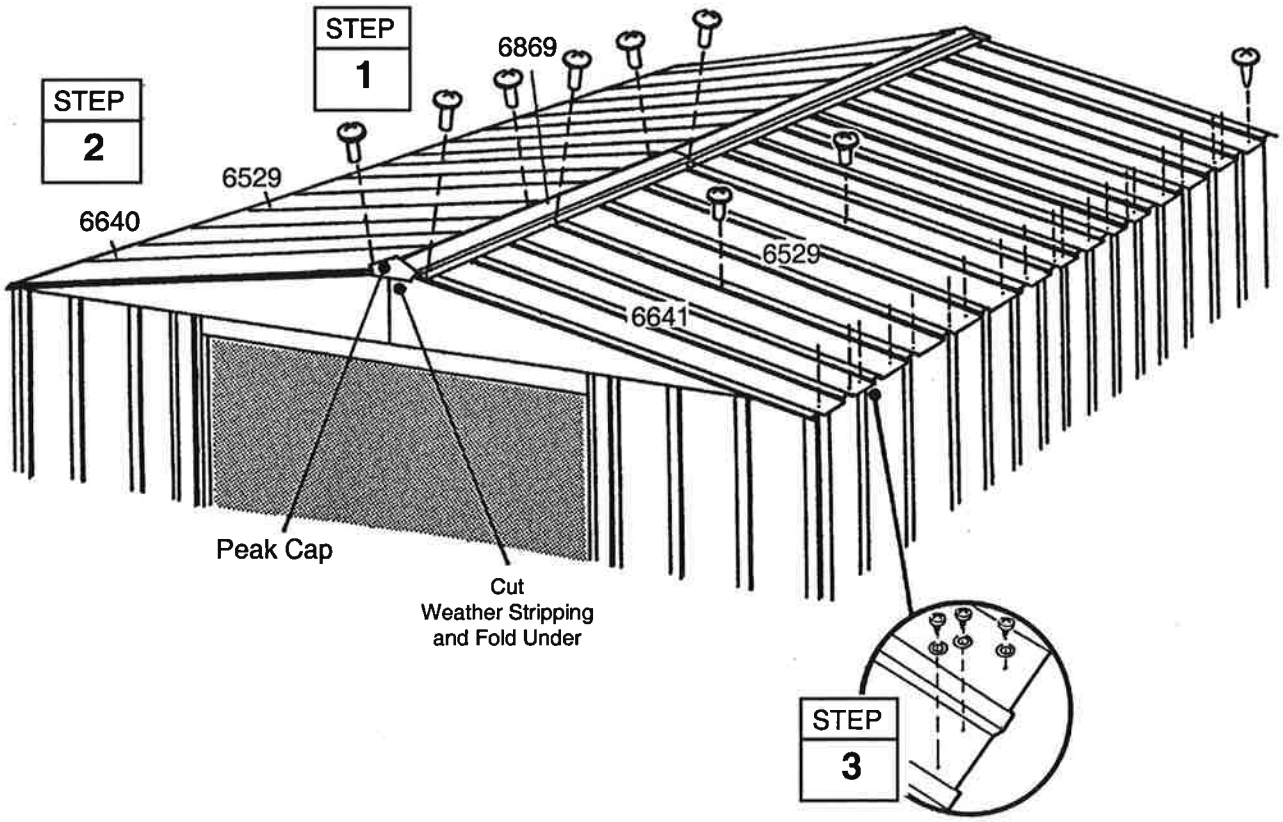

Step 18

SQ31

● Parts Needed For ●

Roof Trim

- **6015 Side Roof Trim (4)**
- **6014 Side Roof Trim (2)**

1 Attach the **side roof trim** pieces to the lower end of the roof panels on each side of the building using screws at each panel overlap.

NOTE
A single screw fastens both trim pieces at the overlap.

2 Using your thumb and index finger, overbend the bottom flange of the side roof trim at the corner inward enough so the right and left roof trim caps fit onto right and left corners.

3 Fasten the roof trim caps to the side trim using a screw.

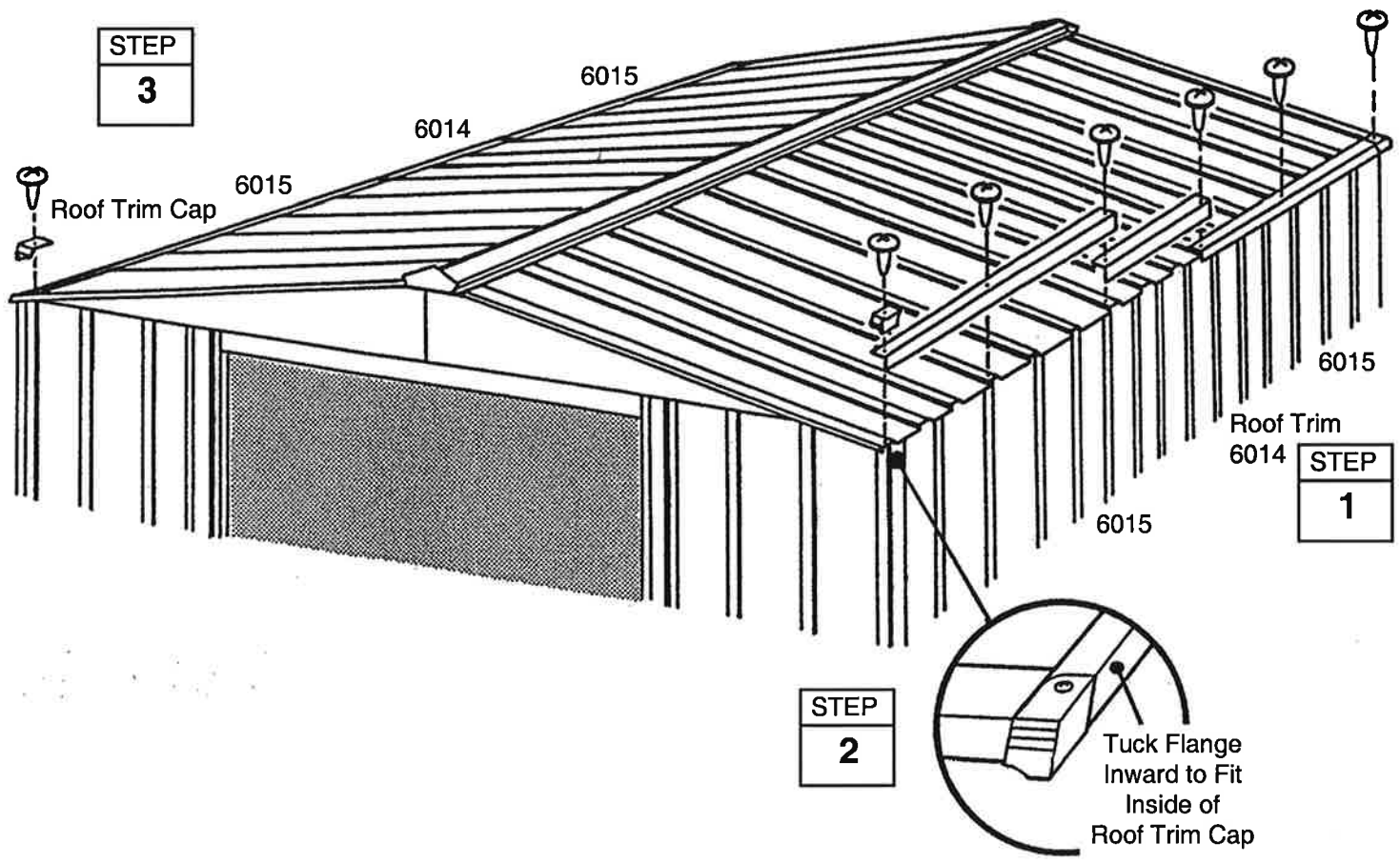

Step 19

SZ32

● Parts Needed For ●
Door Assembly

- **3719 Door Handle Brace (2)**
- **10477 Right and Left Doors (2)**
- **10497 Horizontal Door Brace (4)**
- **6300 Vertical Door Brace (2)**

The steps on this page tell how to assemble the right door. You will perform exactly the same procedures for the left door. Each bolt and screw in the door requires a washer. Proceed as follows:

1 Attach the **door handle brace** and **handle** to the **door** with 1 bolt as shown. *Don't tighten the bolt yet.*

2 Swing the door handle brace up to the hole on the center of the door and insert a screw.

3 Hold the **vertical door brace** against the center of the inside surface of the door and turn the screw to hold the vertical door brace and door handle brace in place. Fasten to door above and below center connection using 2 screws.

4 Insert a second bolt in the door handle and tighten both bolts.

5 Put a **horizontal door brace** onto the top edge and bottom edge and fasten *with 1 bolt in the center.*

6 Attach the **lower door guides and bolts** as shown.

7 Repeat steps 1 through 6 for the **left door.**

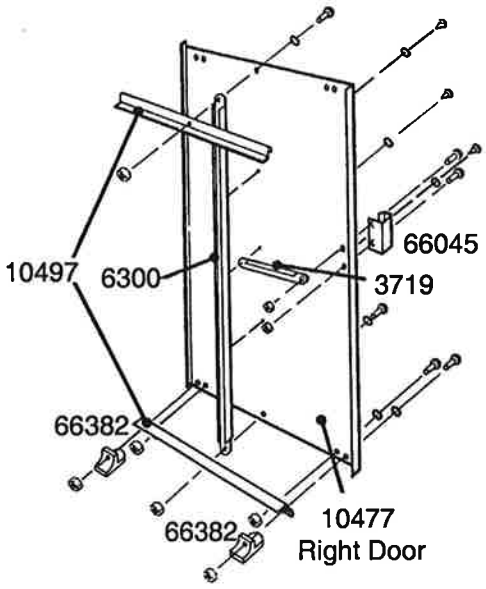

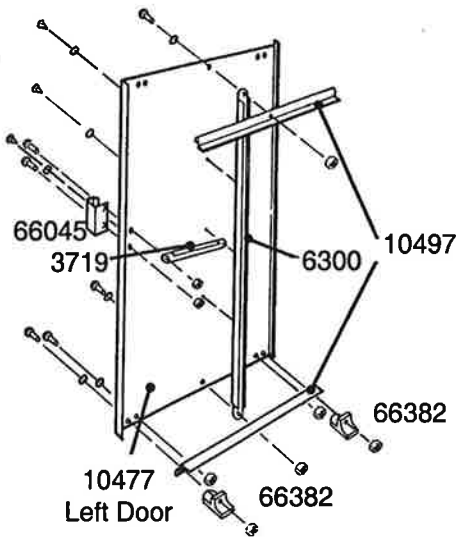

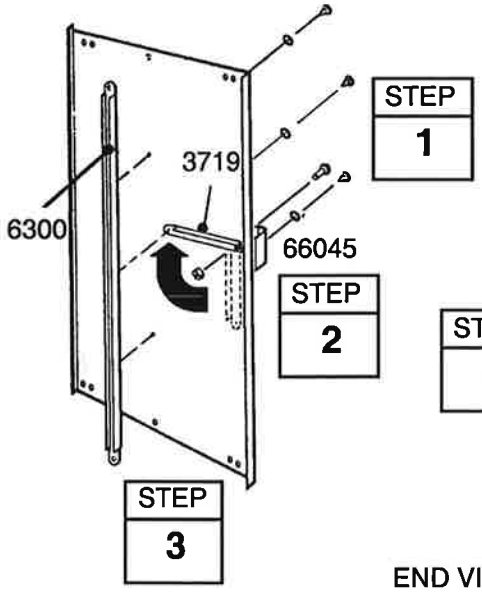

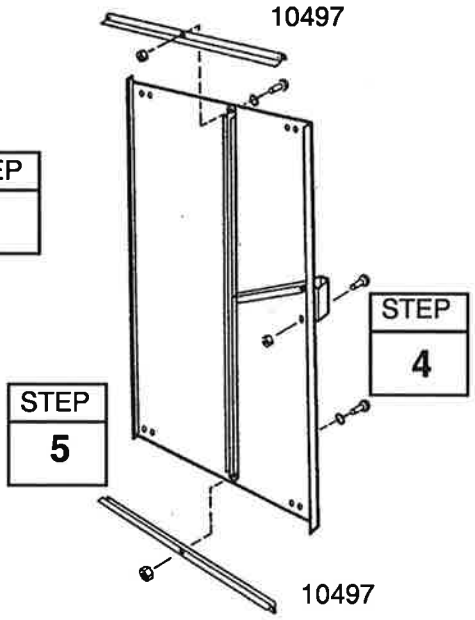

END VIEW SHOWING:

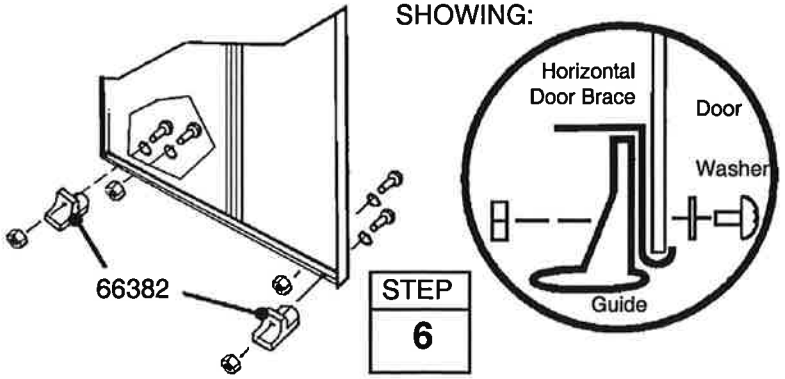

Step 20
SQ33

● Parts Needed For ●
Door Installation & Adjustment

● **Right Door Assembly (1)**
● **Left Door Assembly (1)**

1 From inside the building, put the bottom of the right door assembly (on your left when you are inside the building) behind door jamb into the front frame track.

2 Position the top of the door so that the holes in the door line up with the holes in the door slides.

3 Fasten the door to the door slides using two #10Bx1/2" (13 mm) screws per door slide.

NOTE
The holes in the door slides allow you to adjust the doors. Place the door in the middle holes.

4 Repeat steps 1 through 3 for the left door.

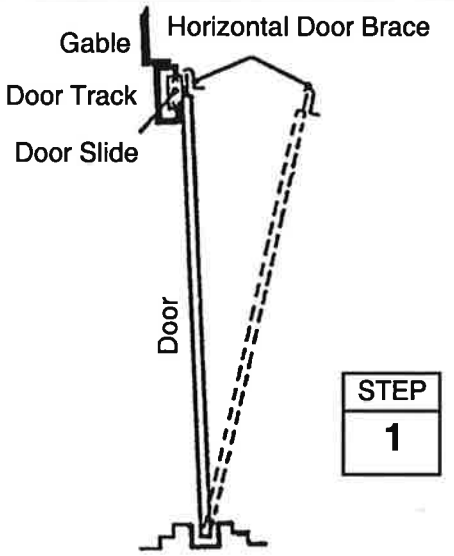

STEP 1 STEP 2

Front Floor Frame Assembly

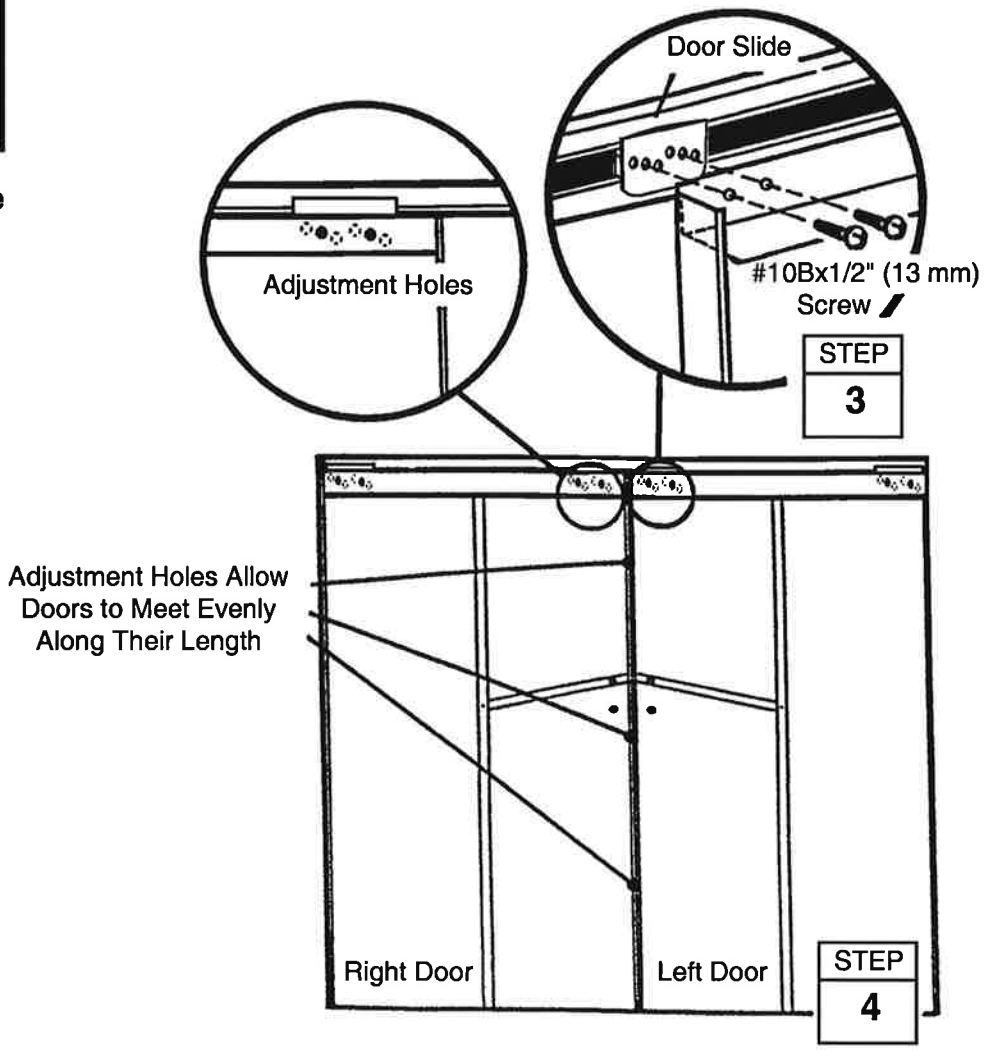

Keep this Owner's Manual and Assembly Instructions for future reference.

Anchoring and Floor Frame

XA34

Anchoring

Anchor your building at this time.

Floor Frame

If you have purchased a Floor Frame Kit you need to install it at this time.

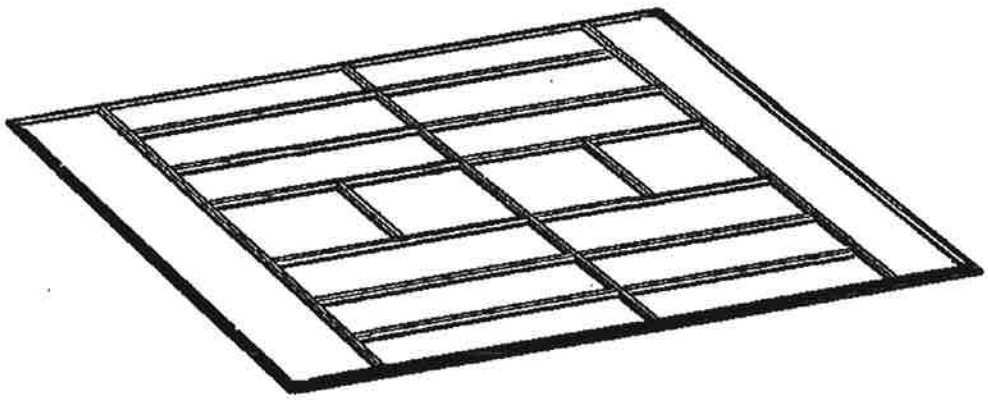

SOME FACTS ABOUT RUST

XA35

SOME FACTS ABOUT RUST

Rusting is a natural oxidizing process that occurs when bare metal is exposed to moisture. Problem areas include screw holes, unfinished edges, or where scrapes and nicks occur in the protective coating through normal assembly, handling and use. Identifying these natural rusting problem areas and taking some simple rust protection precautions can help to stop rust from developing, or stop it quickly as soon as it appears.

1. Avoid nicking or scraping the coating surface, inside and out.

2. Use <u>all</u> the washers supplied. In addition to protecting against weather infiltration, the washers protect the metal from being scraped by the screws.

3. Keep roof, base perimeter and door tracks free of debris and leaves which may accumulate and retain moisture. These can do double damage since they give off acid as they decay.

4. Touch up scrapes or nicks and any area of visible rust as soon as possible. Make sure the surface is free of moisture, oils, dirt or grime and then apply an even film of high quality touch-up paint.