

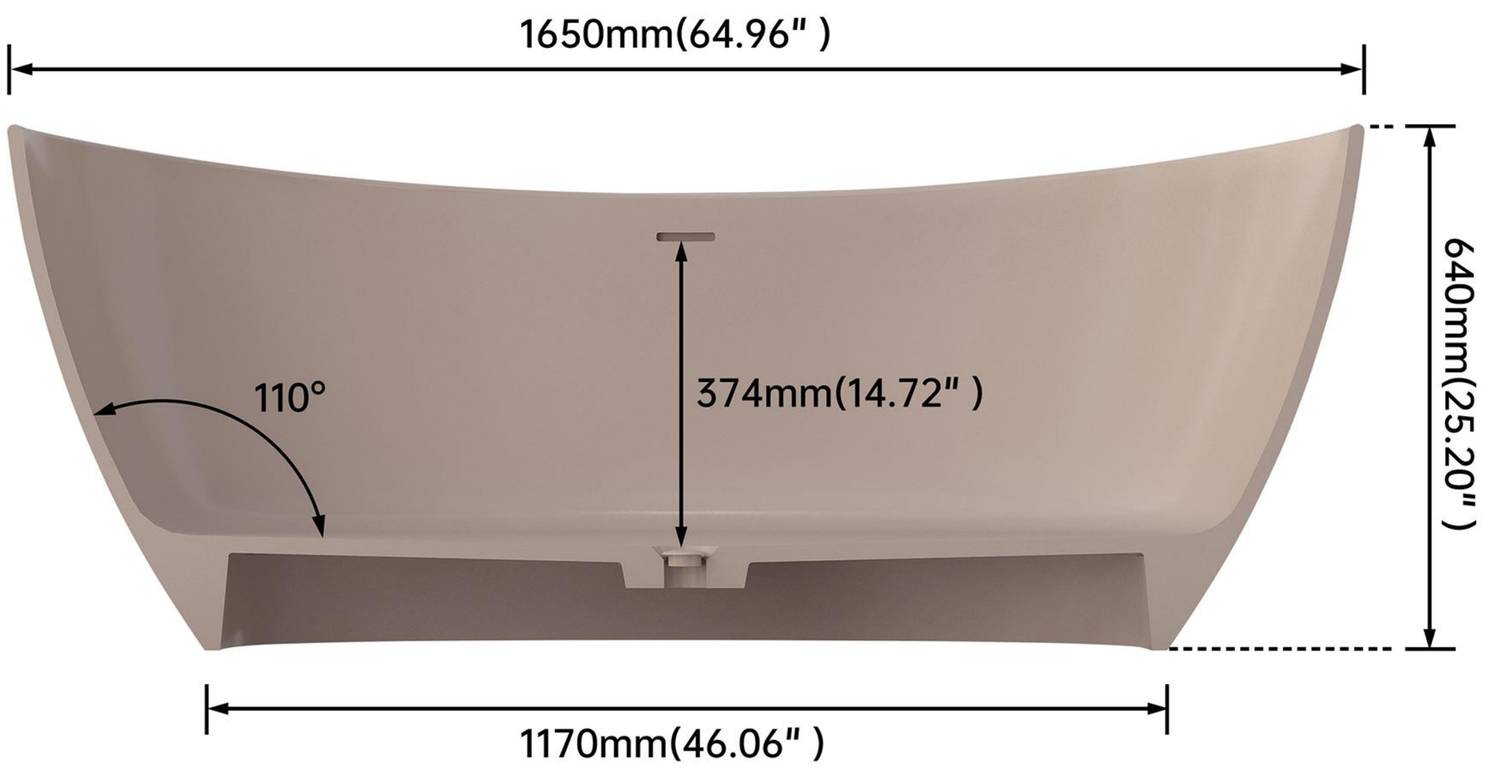

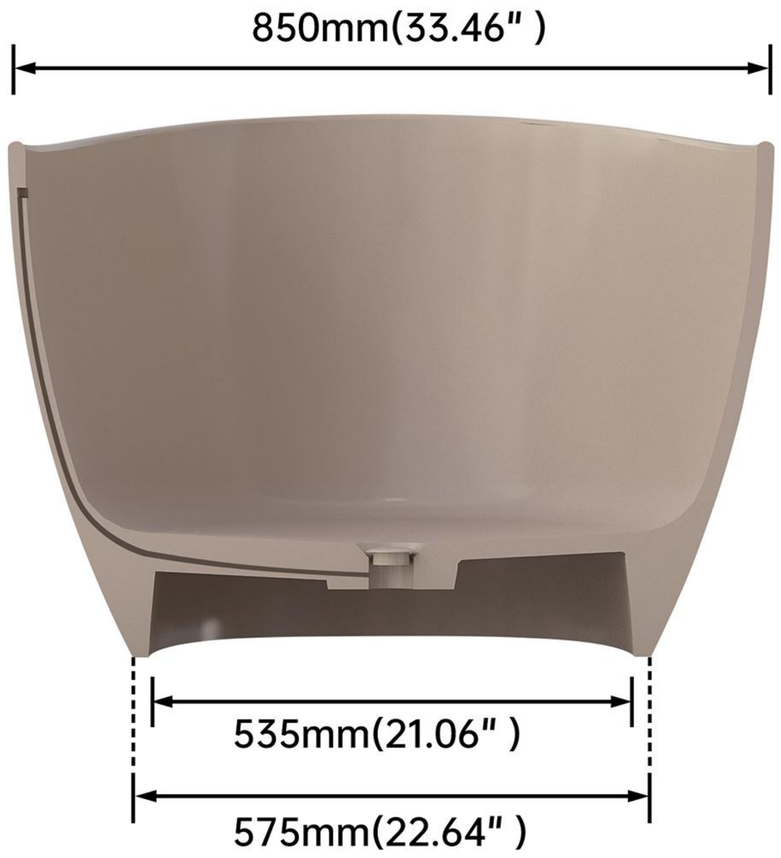

Manual measurements of all dimensions may have minor deviations (Tolerance: +- 0.5")