PREMIER COPPER PRODUCTS

MODEL NUMBER: KSP2_KA50RDB33249

DESCRIPTION: 33" Hammered Copper Kitchen Rounded Apron 50/50 Double Basin Sink, ORB Pull Down Faucet, Matching Drains, and Accessories

PACKAGE INCLUDES THE FOLLOWING ITEMS:

* 33" Hammered Copper Kitchen Rounded Apron 50/50 Double Basin Sink (Model# KA50RDB33249)
* Single Handle Kitchen Faucet with Pullout Spray / ORB Finish (Model# K-PD01ORB)
* Solid Brass Soap & Lotion Dispenser / ORB Finish (Model # PCP-701ORB)
* 3.5" Garbage Disposal Drain w/ Basket / ORB Finish (Model# D-130ORB)
* 3.5" Kitchen Basket Strainer Drain / ORB Finish (Model# D-132ORB)
* Oil Rubbed Bronze Installation Silicone (Model# C900-ORB)
* Copper Sink Wax (Model# W900-WAX)

* ORB: Oil Rubbed Bronze

SINK DETAILS (Model# KA50RDB33249)

* 33" Hammered Copper Kitchen Rounded Apron 50/50 Double Basin Sink
* Finish: Oil Rubbed Bronze | Living Copper
* Outer Dimension: 33" x 24" x 9"
* Inner Dimension: L: 15" x 21" x 9" I R: 15" x 21" x 9"
* Rim: Back, Left, Right - 1" / Apron Front - 2"
* Drain Opening: 3.5" Standard
* Material Gauge: 14
* CODE / STANDARD COMPLIANCE: IAPMO / cUPC LISTED

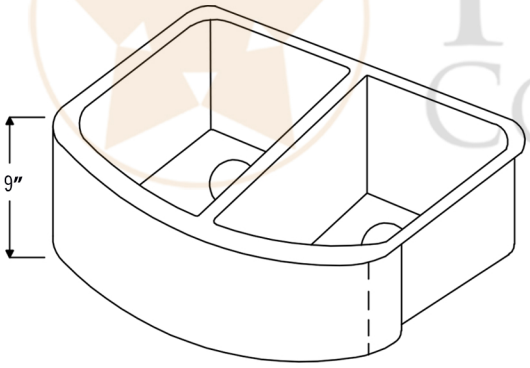

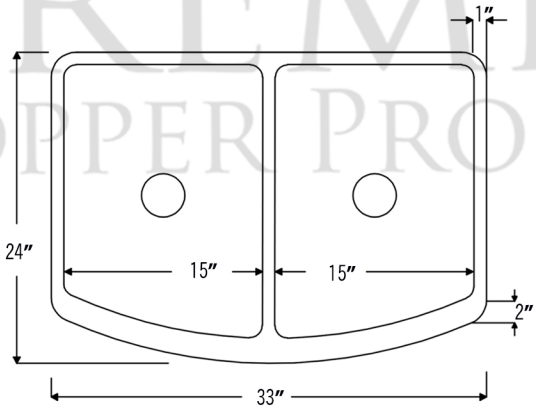

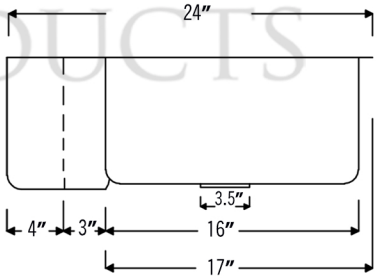

FAUCET DETAILS (Model# K-PD01ORB)

* Single Handle Kitchen Faucet with Pullout Spray
* Color: Oil Rubbed Bronze
* Solid Brass Construction
* Ceramic Disc Cartridges
* Overall Height: 16.687"
* Overall Width: 9.875"
* Spout Reach: 8.5"
* ASME A112.18.1/CSA B125.1, NSF/ANSI 61, California Lead Plumbing Law, ADA and Prop 65 Compliant

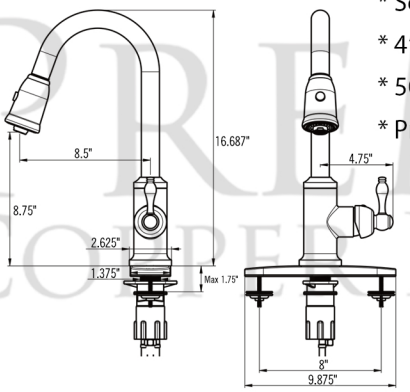

SOAP DISPENSER DETAILS (Model# PCP-701ORB)

* Deluxe Soap and Lotion Dispenser
* Color: Oil Rubbed Bronze
* Solid Brass Head & Plastic Bottle
* 4" Spout Reach
* 500 ML Plastic Bottle
* Prop 65 Compliant

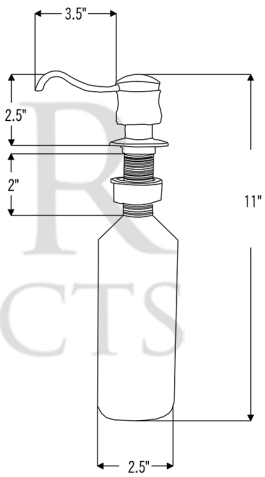

THIS PRODUCT IS HAND CRAFTED, SMALL VARIANCES IN COLOR AND SIZE MAY OCCUR. DO NOT MAKE ANY INSTALLATION CUTS UNTIL YOU RECEIVE YOUR ITEM(S).

PREMIER COPPER PRODUCTS

MODEL NUMBER: KSP2_KA50RDB33249

DESCRIPTION: 33" Hammered Copper Kitchen Rounded Apron 50/50 Double Basin Sink, ORB Pull Down Faucet, Matching Drains, and Accessories

PACKAGE INCLUDES THE FOLLOWING ITEMS:

* 33" Hammered Copper Kitchen Rounded Apron 50/50 Double Basin Sink (Model# KA50RDB33249)
* Single Handle Kitchen Faucet with Pullout Spray / ORB Finish (Model# K-PD01ORB)
* Solid Brass Soap & Lotion Dispenser / ORB Finish (Model # PCP-701ORB)
* 3.5" Garbage Disposal Drain w/ Basket / ORB Finish (Model# D-130ORB)
* 3.5" Kitchen Basket Strainer Drain / ORB Finish (Model# D-132ORB)
* Oil Rubbed Bronze Installation Silicone (Model# C900-ORB)
* Copper Sink Wax (Model# W900-WAX)

* ORB: Oil Rubbed Bronze

DRAIN #1 DETAILS (Model# D-130ORB)

* 3.5" Deluxe Garbage Disposal Drain w/ Basket
* Color: Oil Rubbed Bronze
* Outer Dimension: 4.5" x 2.25"
* Inner Dimension: 3.5"
* Installation Type: Insinkerator Brand Compatible
* Material: Brass
* Prop 65 Compliant

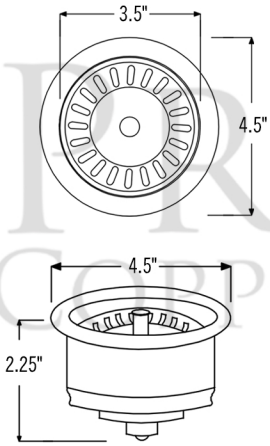

DRAIN #2 DETAILS (Model# D-132ORB)

* 3.5" Kitchen, Prep, Bar Basket Strainer Drain
* Color: Oil Rubbed Bronze
* Outer Dimension: 4.5" x 3"
* Inner Dimension: 3.5"
* Installation Type: Compression
* Material: Brass/PVC
* Prop 65 Compliant

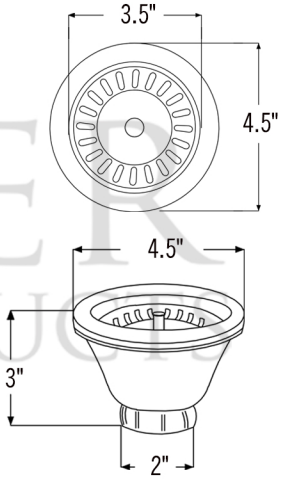

SILICONE DETAILS (Model# C900-ORB)

* Neutral Cure Installation Silicone
* Size: 4.7 OZ
* Matches a Variety of Different Styled Sinks and Drains

COPPER SINK WAX DETAILS (Model# W900-WAX)

* Copper Sink Wax Protectant
* Made from Natural Bee's Wax
* No Wax Build Up Ever!
* Hard Water Protection
* Works great on a variety of different surfaces:

Copper Sinks & Tubs	*Faucets*
Marble	*Kitchen Cabinets*
Granite	*Wrought Iron*
Countertops	*Glass*
Door Knobs	*Aluminum*
Shower Glass	*Chrome*
Mirrors	*Appliances*
Fine Furniture	*Leather*