ASSEMBLY INSTRUCTIONS FOR WOODEN CABINET & BRISTLE DARTBOARD SET

#1  Mounting Plate (1 PC)	#2  1 inch - 25mm Screw (1PC)	#3  Bumper (3PCS)
#4 5/8 inch 15mm Nail (3 PCS)	#5  Wall Anchor (2 PCS)	#6  30mm Screw (2 PCS)

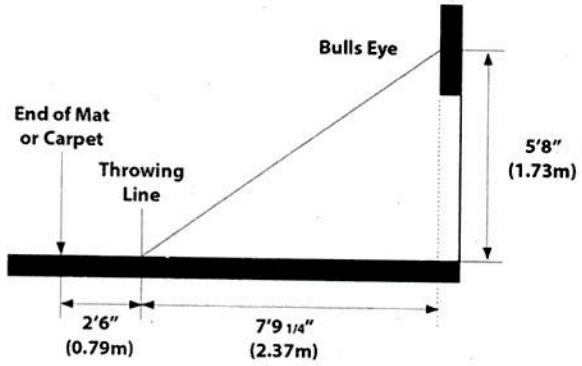

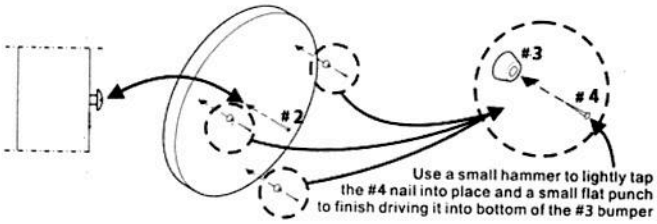

Step 1 Attach #2 screw and #3 bumpers to back of dartboard, DO NOT insert #2 all the way into board. This can then be adjusted at step 4.

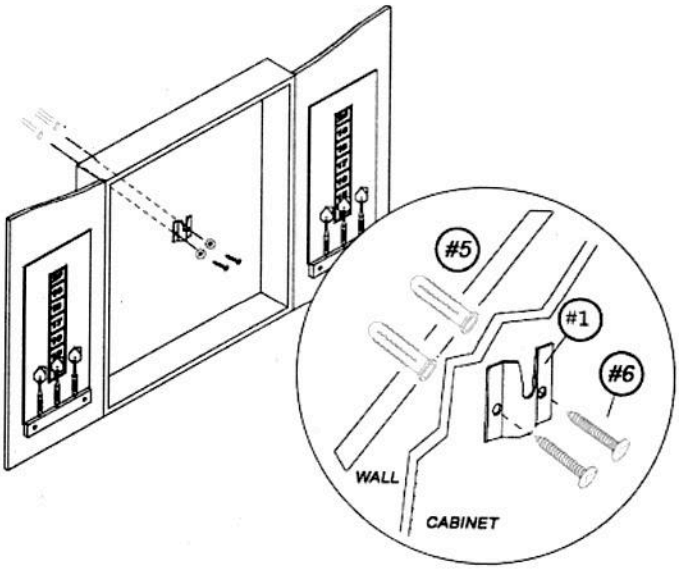

Step 2 Drill holes for the center attachment to the wall. If fitting the cabinet to a concrete or solid wall which is recommended insert the wall anchors, if not then the screws go directly into the wall.

Step 3 Put #6 screws through mounting plate, cabinet and then into the wall anchors.

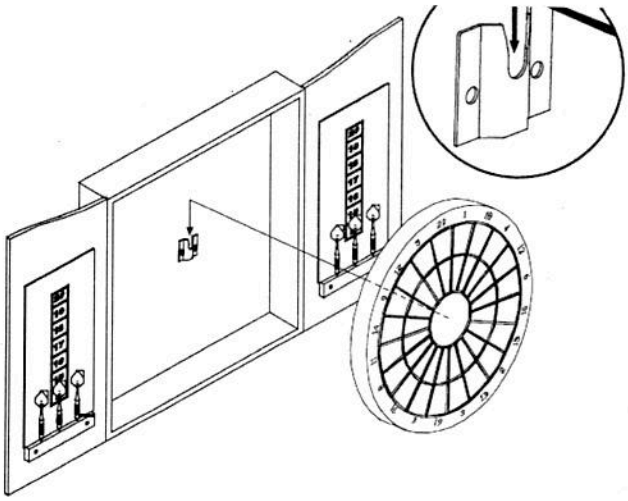

Step 4 Hanging the dartboard on the mounting plate and adjust screw in back of dartboard to provide secure fit.