REPAIR SHEET

BRAND		DESCRIPTION
RYOBI		**18 Volt String Trimmer/Edger**
MODEL NO.	MFG. NO.	
P20102VNM	**107482101**	

TECHTRONIC INDUSTRIES POWER EQUIPMENT
P.O. Box 1288, Anderson, SC 29622 ■ 1-800-525-2579 ■ **www.ryobitools.com**

8-31-20 (Rev:01)

The model number and manufacturing location will be found on a label attached to the product. Always mention this information in all communications regarding this product and when ordering parts.

P20102VNM

FIGURE A

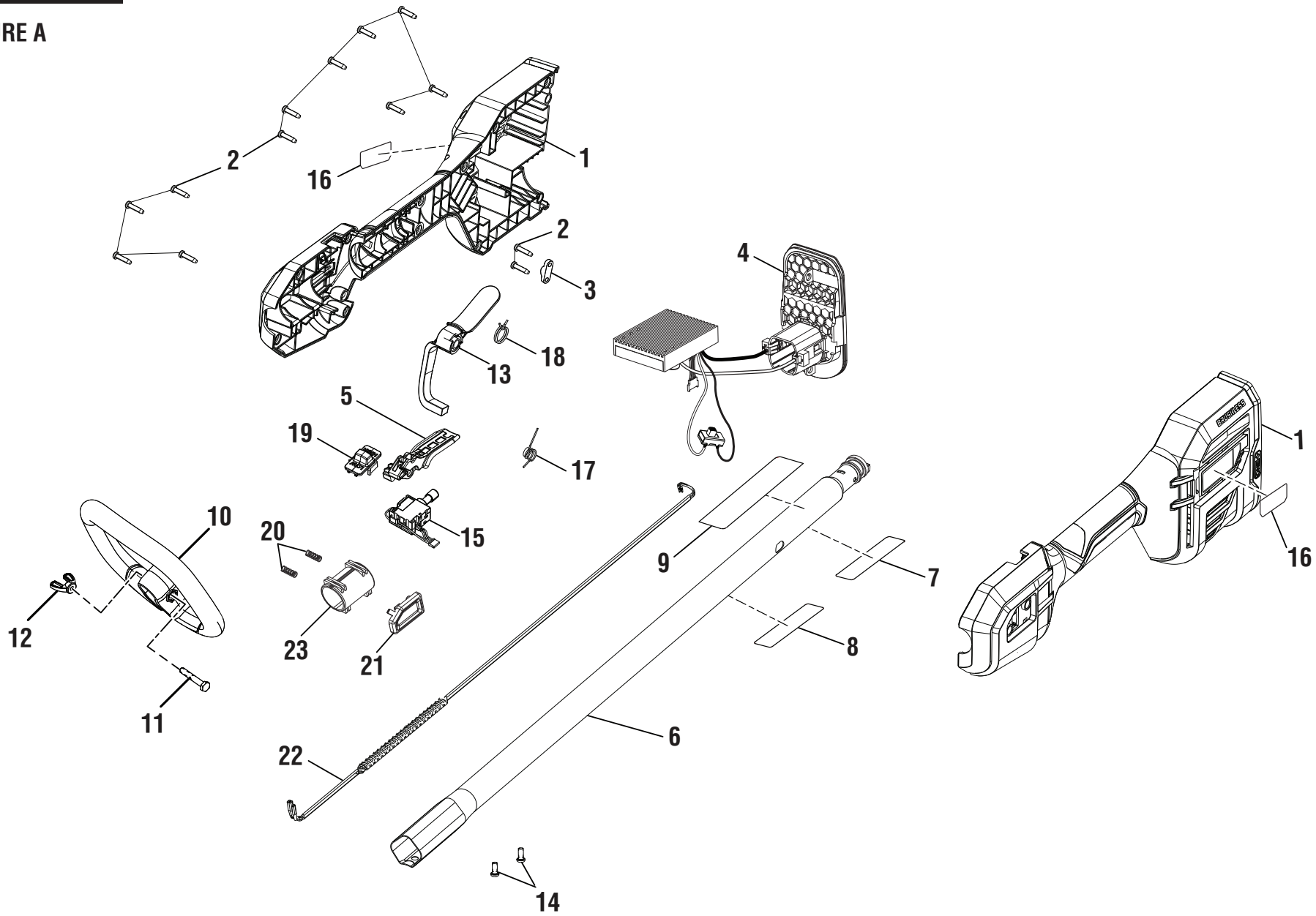

PARTS LIST — FIGURE A

KEY NO.	PART NO.	DESCRIPTION	QTY.
1	316077001	Rear Handle Assembly (Inc. Key No. 16)	1
2	661817001	Screw (M4 x 13.5 mm, T15 Torx Pan Hd.)	13
3	513211001	Strain Relief Plate	1
4	316078001	Motor Controller and Switch Assembly	1
5	539527001	Trigger	1
6	316079001	Upper Boom Assembly (Inc. Key Nos. 7-9)	1
7	941013005	Warning Label (French/Spanish)	1
8	941588659	Data Label	1
9	941588795	Warning Icons Label	1
10	308991003	Auxiliary Handle Assembly (Inc. Key Nos. 11-12)	1
11	660643008	Bolt (1/4-20 x 40 mm, Hex Hd.)	1
12	518949001	Wing Nut (1/4-20)	1
13	539526001	Lock-Out Trigger	1

KEY NO.	PART NO.	DESCRIPTION	QTY.
14	661848001	Screw (M5 x 8 mm, Pan Hd.)	2
15	760952004	Variable Speed Switch	1
16	941588794	Logo Label	2
17	660502002	Torsion Spring (Trigger)	1
18	698399001	Lock-Out Spring	1
19	532076011	Slide Switch Cover	1
20	698460001	Spring	2
21	539530001	Rotation Button	1
22	770293001	Spring Wire	1
23	539531001	Boom Holder	1
	Not Shown:		
	998000054	Operator's Manual	

P20102VNM

FIGURE B

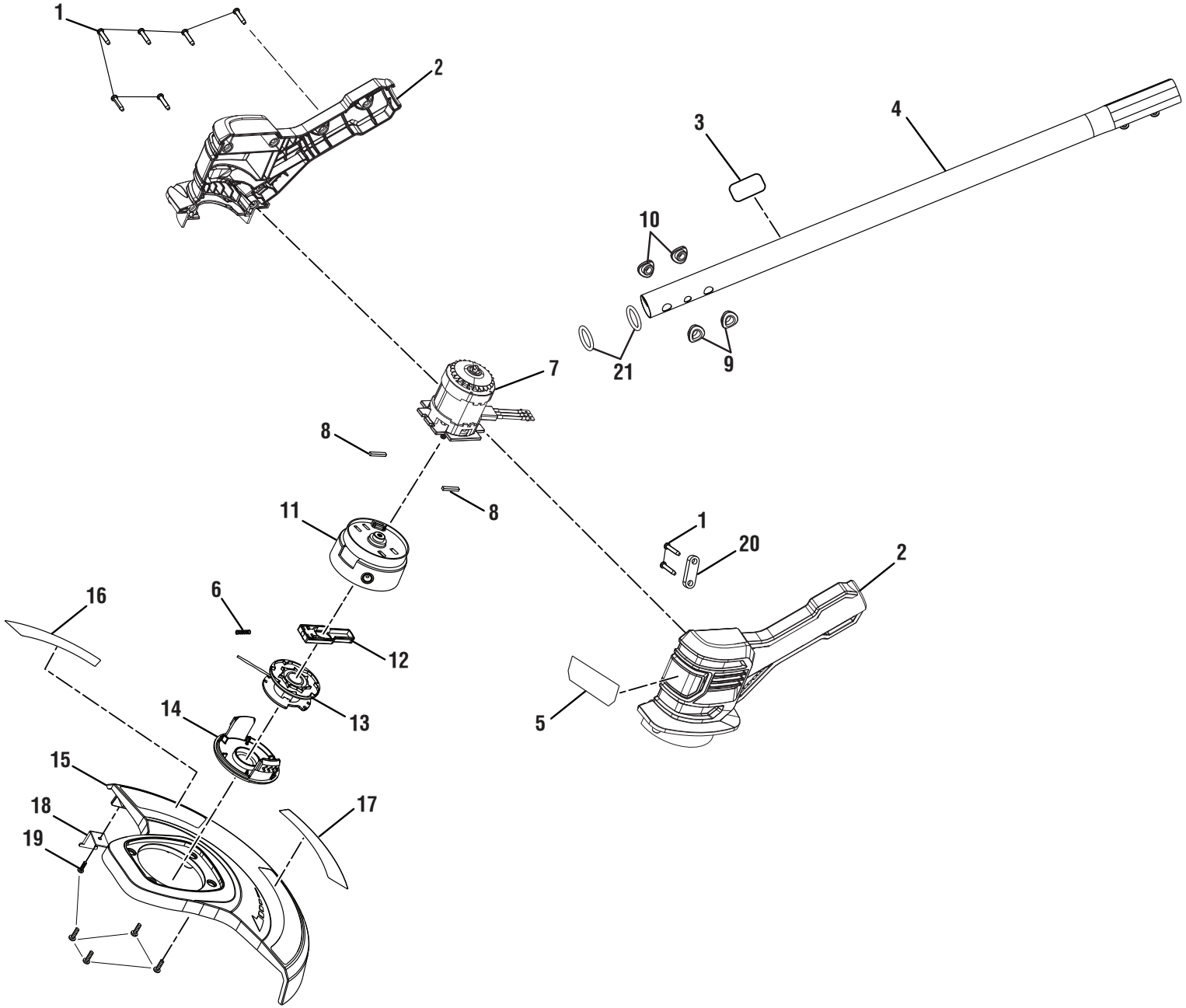

PARTS LIST — FIGURE B

KEY NO.	PART NO.	DESCRIPTION	QTY.
1	661817001	Screw (M4 x 13.5 mm, T15 Torx Pan Hd.)	8
2	316081001	Motor Housing Assembly (Inc. Key No. 5)	1
3	941588740	Lower Boom 18 V Label	1
4	316080001	Lower Boom Assembly (Inc. Key No. 3)	1
5	941588793	Front Logo Label	1
6	679034001	Compression Spring (Slider)	1
7	742679001	Motor	1
8	562079002	Rubber Plate (Motor Mounting Plate)	2
9	565565001	Plug	2
10	565564001	Plug	2
11	522991004	Spool Base	1

KEY NO.	PART NO.	DESCRIPTION	QTY.
12	310920001	Slider Assembly	1
13	*	Spool w/Line Assembly	1
14	*	Spool Cap	1
15	316082001	Guard Assembly (Inc. Key Nos. 16-19)	1
16	941588516	Adjustable Cut Label	1
17	941588515	Line Trimming Instructions Label	1
18	638845006	Line Cut-Off Blade	1
19	660208055	Screw (M4 x 12 mm, Pan Hd.)	5
20	513211001	Strain Relief Plate	1
21	565563001	O-Ring	2

**** Standard Hardware Item – May Be Purchased Locally at The Home Depot***

P20102VNM

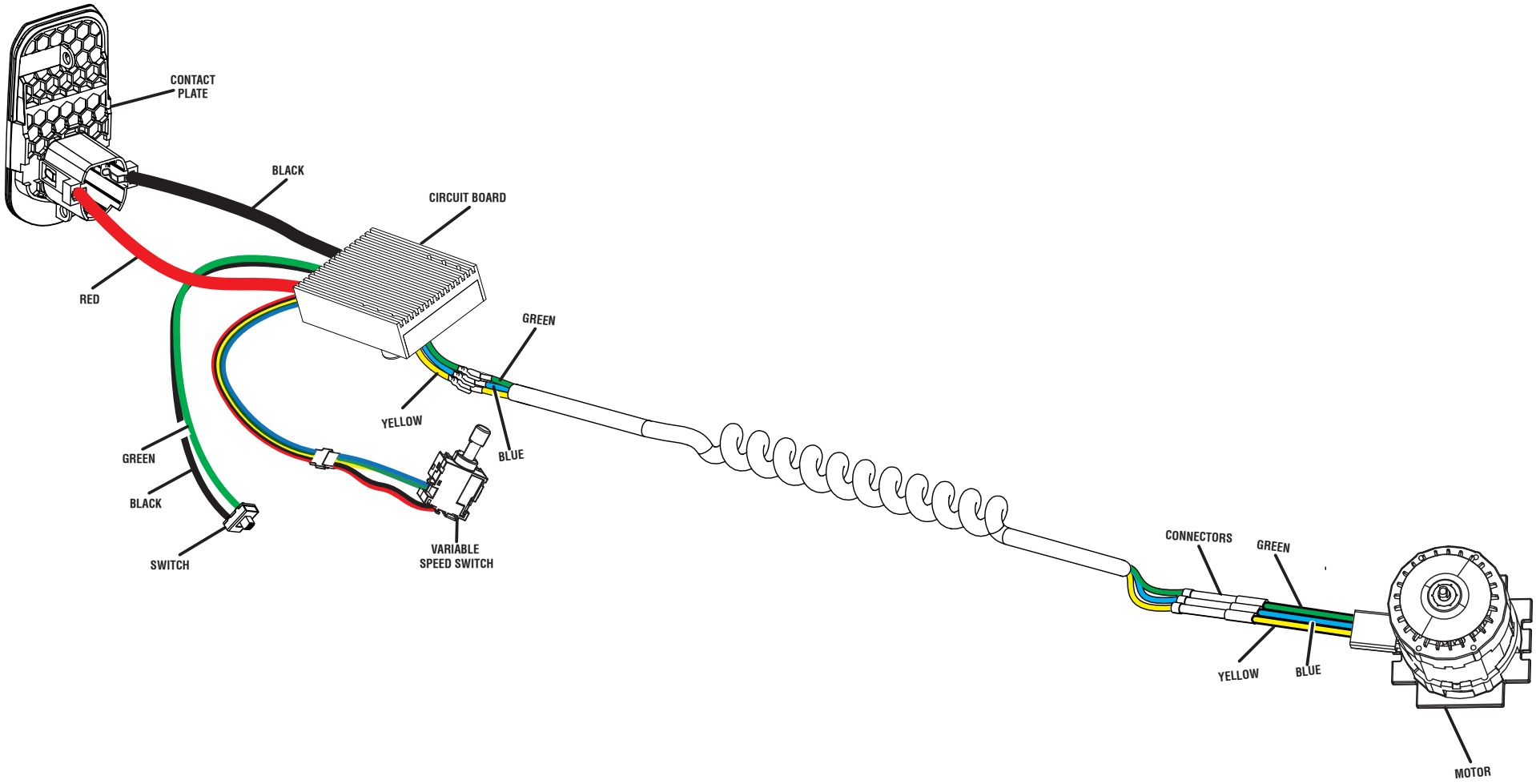

WIRING DIAGRAM