ASSEMBLY INSTRUCTIONS

- Table Wooden Furniture

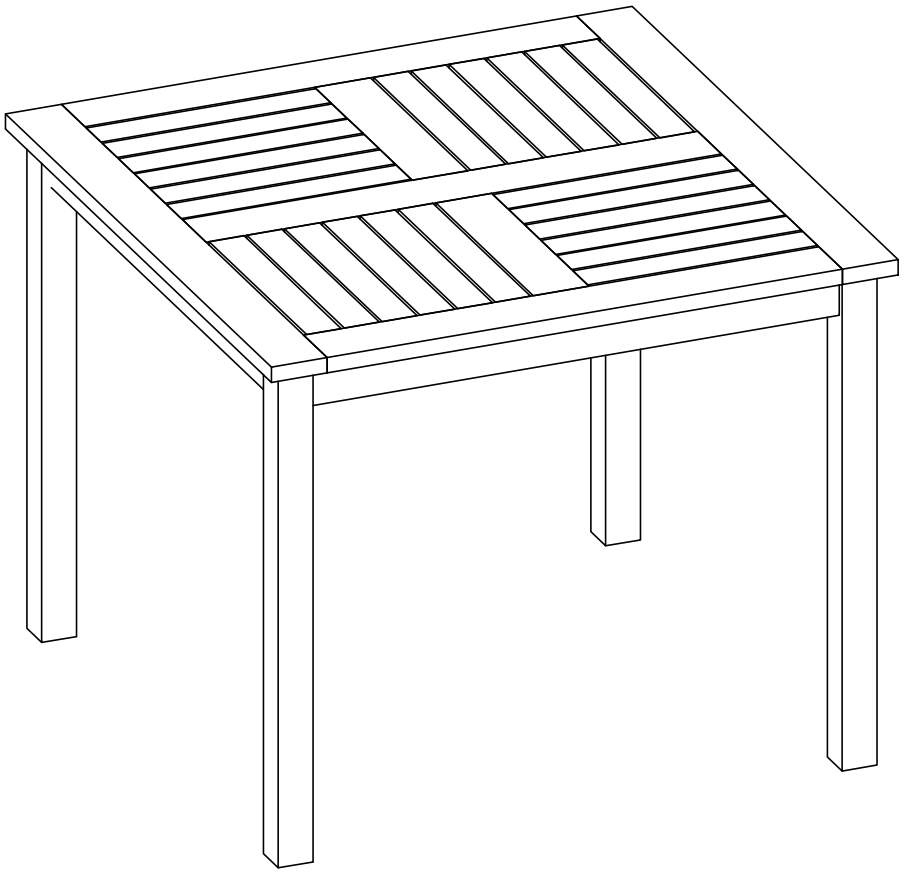

If you have any assembly problem
Contact us via email: hofficeservice@gmail.com for more information.

Parts List And Hardware List

Check and make sure you get the components on the list, contact us for any missing

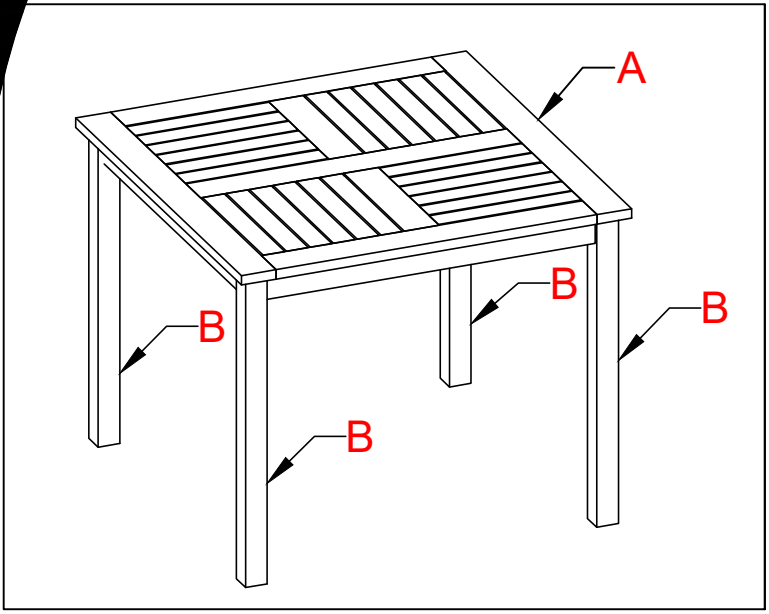

A Table Top (1Pc) 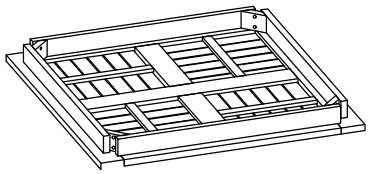	B Table Leg (4Pcs) 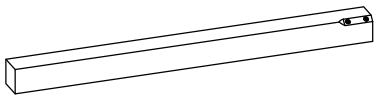

1 Bolt M8x60mm (8Pcs) 	2 Flat Washer M8 (8Pcs) 	3 Allen Key (2Pcs) 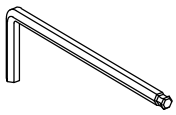

Notice:

1. 50% Tighten before fixing all screws, Allen wrench is recommended instead of an electric drill.
2. Place the item on a flat ground to adjust and make sure it remains stable.
3. Tighten up all screw with tools gradually.
4. If screw are not aligned with holes during assembly, please loosen all the other screws to 50% and continue the assembly process.
5. If the item is not stable, please loosen all screws, adjust it on a flat ground and tighten up all screws again.
6. Note: If one or some screws are fully tighten during assembly, chances are the others will not be aligned with holes. In addition, all the holes are designed to be relatively larger to provide more space for the adjustment of the screws

Installation step

For successful installation, When installing, please do not tighten the screws once, when the screws are all installed, a unified tighten all the screws

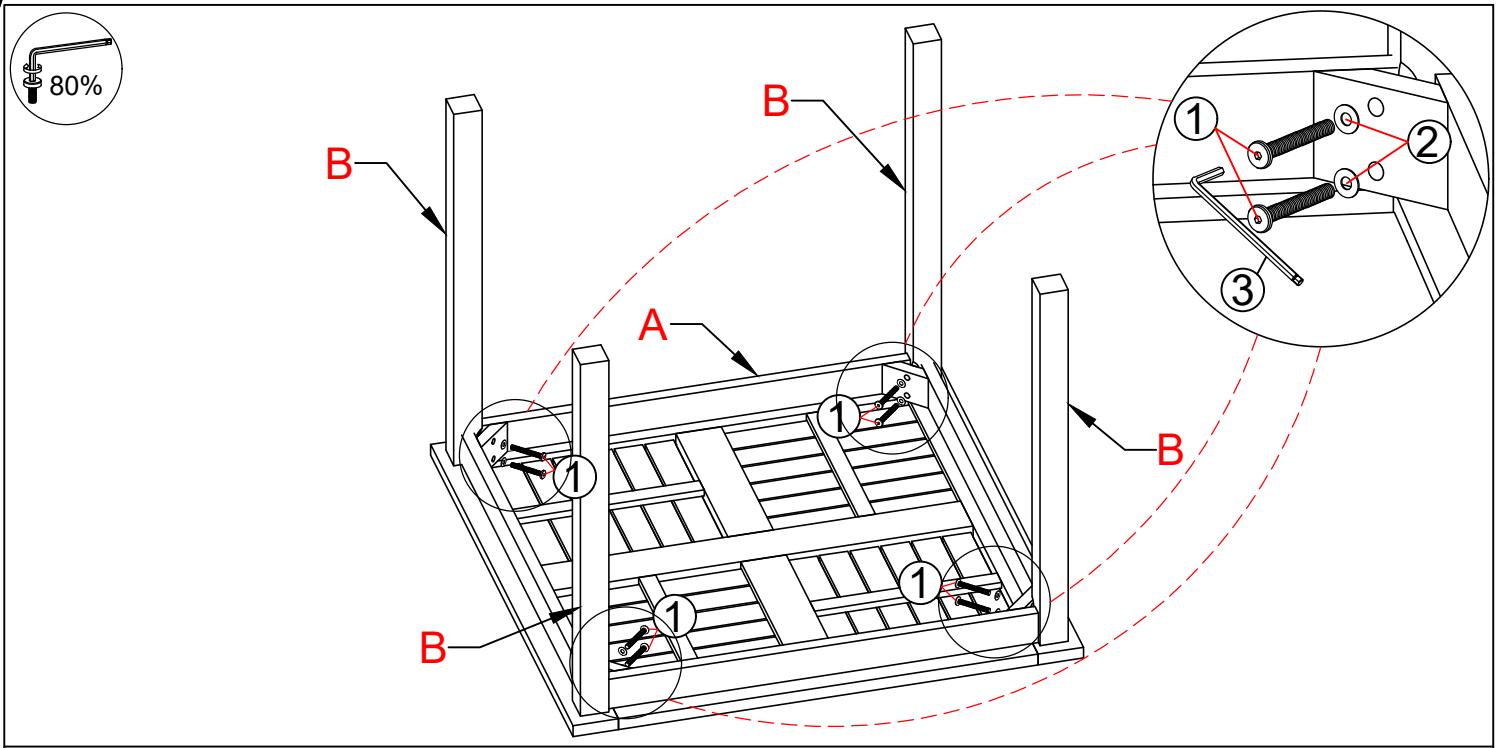

Step 1: Connect Table Top (A) & Table Leg (B), tighten Bolt (1), Flat Washer (2) with Allen Key (3).

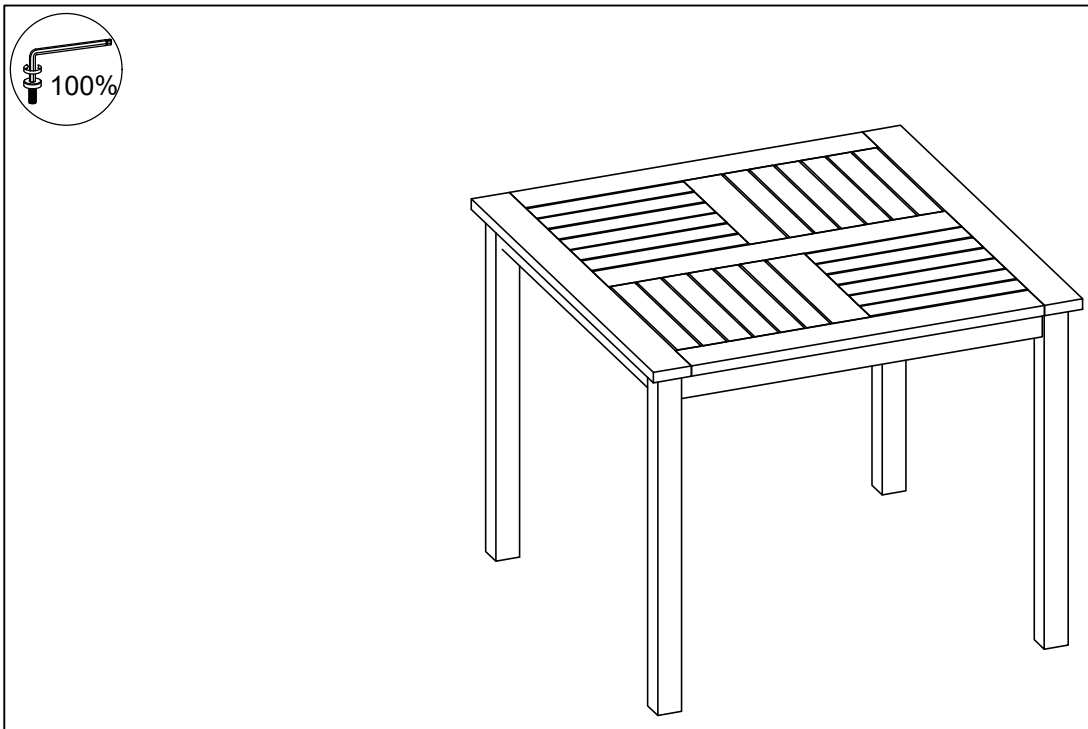

Step 2: Put the Table upright and make sure all legs are level, then firmly tighten bolts with Allen Key (3) to finish Table.