V20230110

SLIDING GATE OPENER
USER MANUAL

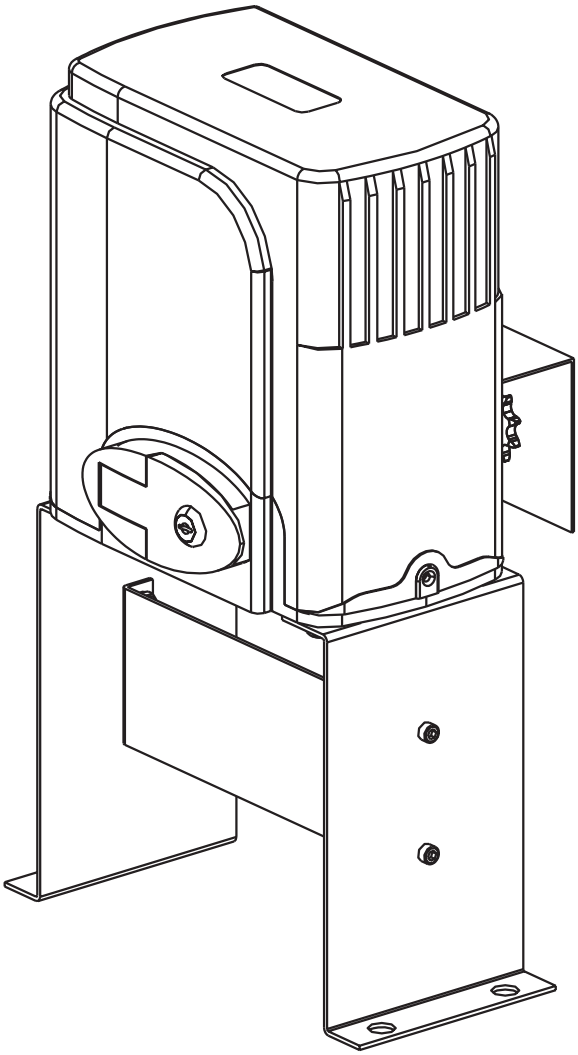

Read Carefully Before Use
Keep for Future Reference

Safety Information

⚠ Warning!

- Read these instructions completely before installation and use. Provide them to any technician used to install, maintain, or repair this device and provide them with the device if it is ever given or sold to a third party.
- Install and use this gate opener only in accordance with these instructions and all applicable local and national laws and regulations. Adding instructional or warning signage may be necessary in your area. Only use the device for its intended purpose, opening and closing a single sliding gate for vehicular traffic. Always aim to minimize public exposure to potential hazards such as pinch points. Failure to do so may result in serious property damage and severe personal injury.
- Install and use this gate opener only on firm level ground. Install and use this device so that its motor and other hazardous components are not in public areas and protected as much as possible from unauthorized access and use. There should be adequate clearance between your gate and any nearby structures to prevent any possibility of a pinching or crushing hazard during use. If this is impossible, the area should be guarded as well as possible and warnings placed nearby.
- **ONLY** allow trained technicians to install and repair this device and its electrical connections. Disconnect all power from electronic components during installation and maintenance except as instructed for safely testing functionality.
- **ONLY** use this device for a single sliding gate intended for vehicular traffic. Pedestrians should be provided with a separate access point far enough away to ensure they never come into contact with the moving vehicular gate.
- **DO NOT** install this device in any area prone to flooding or in locations exposed to flammable or explosive fumes.
- **ONLY** use well-connected and maintained ANSI #41 chains with this device. Never use this device for gates wider than 40 feet (12 m) and never allow the sprockets to carry the weight of the gate. Keep the chain correctly positioned so all weight is distributed to the gate's own wheels during operation.
- **ONLY** install fixed controls for the gate where they cannot be reached over, under, around, or through the gate. They should also be far enough away that operators cannot contact the moving gate during use.
- **NEVER** allow children to play on or around this device or its attached gate. Keep controls away from children and out of their reach at all times and warn them of the gate's danger.
- **NEVER** pair a remote control for this device with any other control board. Never attempt to operate this device with two or more remotes or control devices at the same time.
- All provided components of this device are weatherproofed to withstand normal rain. Ensure adequate insulation and protection of all electrical connections and never direct pressurized water against any part of this device.
- Keep your gate well maintained and its track free of grime and debris. Periodically confirm that it runs smoothly under manual operation.
- **DO NOT** use if any component is missing, loose, worn, or damaged. Tighten, repair, or replace problematic parts before further use. Only replace components with identical parts and always fully replace damaged electrical cords.

Specifications

Input Power	110–120 V~ 60Hz	
Rated Power	0.37 hp	280 W
Torque	11.8 lb.-ft.	16 N·m
Duty Cycle	S2 20 min.	
Max. Gate Weight	1400 lb. 0.7 T	600 kg 0.6 MT
Max. Gate Speed	42.5 fpm	13 m/min.
Max. Gate Length	20 ft.	6 m
Max. Noise	56 dB	
Temp. Range	−4°F to 158°F	−20°C to 70°C
Weatherproofing	IP44	
IR Signal	940 nm 1.9 kHz	
IR Sensor Range	6.6–65.6 ft.	2–20 m
Max. Remotes	25	
Remote Range	98.4 ft.	30 m
Remote Frequency	433.92 MHz	

Package List

No.	Picture	Name	Quantity
A	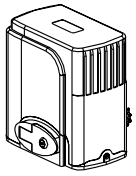	Motor	1
B		Manual Release Keys	2
C	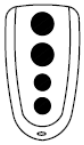	Remote Controls	2
D	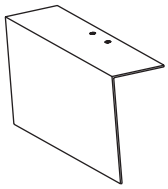	Sprocket Cover	1
E	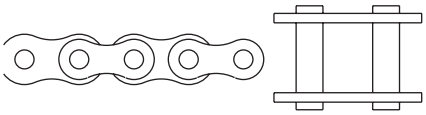	#41 Chains	2
F		Tie Rods	2
G	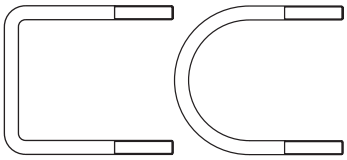	Square & Round Bolts	8
H	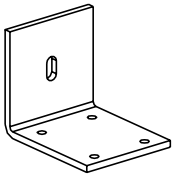	Gate Brackets	2
I	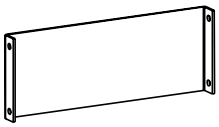	Horizontal Mounting Plate	1
J	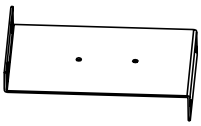	Vertical Mounting Plates	2

No.	Picture	Name	Quantity
K		M8 Foundation Bolts	4
L		Magnet & Bracket Sets	2
M		M4×10 Bolts	4
N		M6×20 Bolts	4
O		M6×65 Hex Bolts	4
P		M8×40 Hex Bolts	4
Q		M6 Hex Nuts	16
R		M8 Hex Nuts	20
S		M6 Flat Washers	16
T		M8 Flat Washers	18
U		M6 Spring Washers	16
V		M8 Spring Washers	14
W		Infrared Sensor Set	1

Installation

Initial Setup

1. Ensure that your gate does not exceed your model's weight capacity and includes the following features or their equivalent.

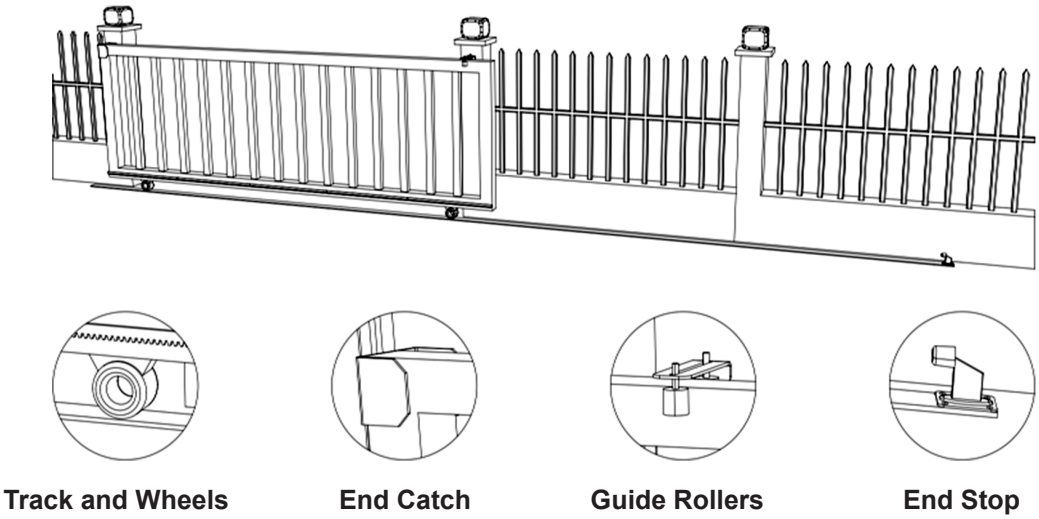

Figure 1

2. Ensure that your gate does not exceed 40 feet (12 m) in length. If it exceeds 20 feet (6 m) in length, you will need to purchase additional ANSI #41 chain and connect it to those provided with your device.

   ⚠ **NEVER** use incompatible chain sizes with this device and **ALWAYS** ensure the gate chain is securely fastened prior to use.

3. Ensure that your gate is properly installed on firm level ground. It should move smoothly and horizontally along its entire range and its wheels and guides should rotate easily and be free of any corrosion, dirt, or grime. Any track should be cleaned and firmly mounted along its entire length. There should be adequate space at either end to avoid any pinching or crushing hazard once its movement is automated or the hazardous area should be blocked off and warnings posted.

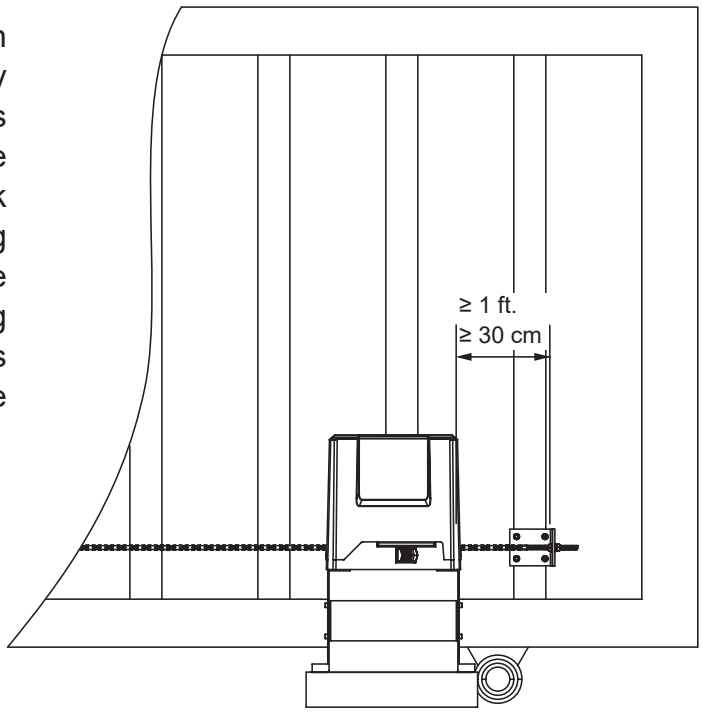

Figure 2

4. Ensure that the gate opener will have a suitable location on firm level ground at least one foot (30 cm) inside the chain bracket on the nearest end of the gate.

   The default settings for this motor are for placement on the right side of your gate when facing out from your property. It can be installed on the left side but some settings will need to be reversed for some functions like automatic closure to work properly.

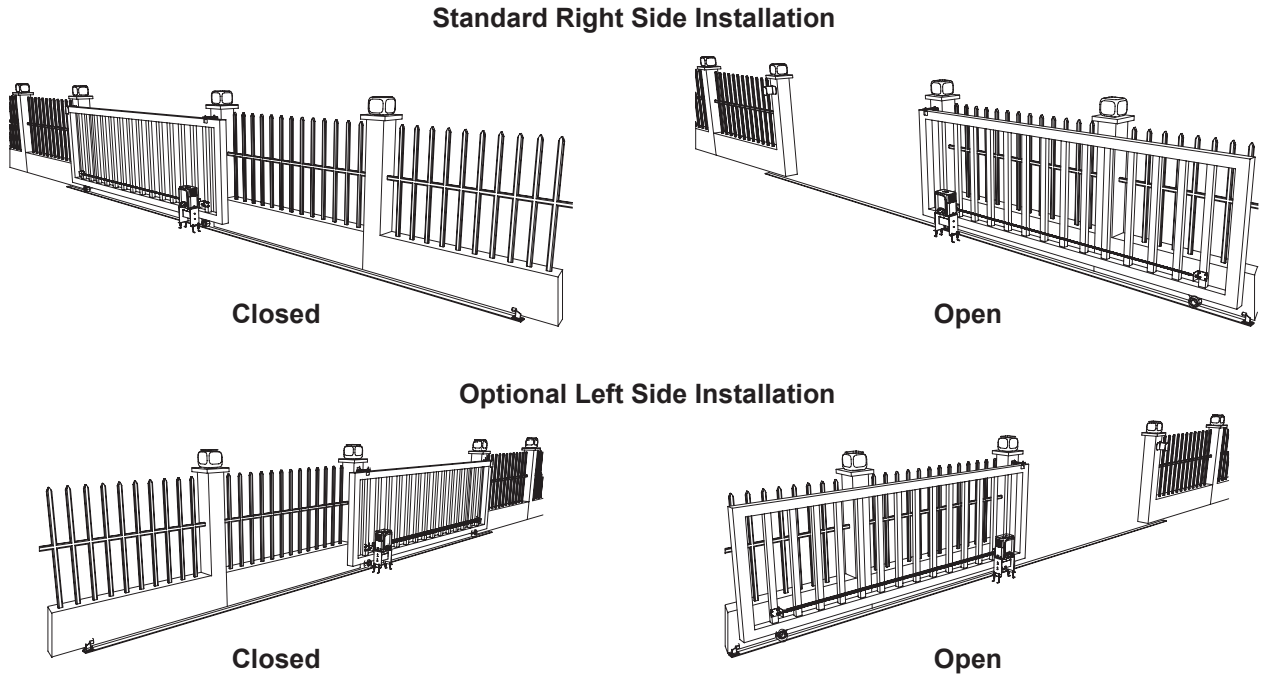

Figure 3

5. Prepare a 110V/60Hz power connection for the gate opener. The wiring should be a 3-core cable at least 16 AWG (1.5 mm²) thick.

   The wiring should run from a GFCI outlet or a circuit breaker within sight of the gate. It is recommended this outlet or switch be located at least 5 feet (1.5 m) above the ground. The wiring connections should be able to withstand rain and other weather. It is recommended that the power cable run underground near the gate inside PVC pipe.

6. If you will use the infrared sensors, prepare locations for them on opposite sides of your gate. They should be directly across from one another at least 6′7″ (2 m) apart and no further apart than 65 feet (20 m). It is recommended that they be placed out of direct sunlight if possible. Pilot holes for their support bolts (not incl.) should be placed as shown in Figure 4.

   They will need a connection to 12V DC power. This can be provided from the motor's circuit board or separately. The signal line from the receiver—the sensor with a 5-pin terminal—and any power lines should be prepared. The wires should be at least 22 AWG (0.5 mm²) thick. It is recommended that these lines and those from any other control or access system also be placed underground inside a separate PVC pipe than the one used for the motor's power cord. Again, all wiring connections should be able to withstand rain and inclement weather.

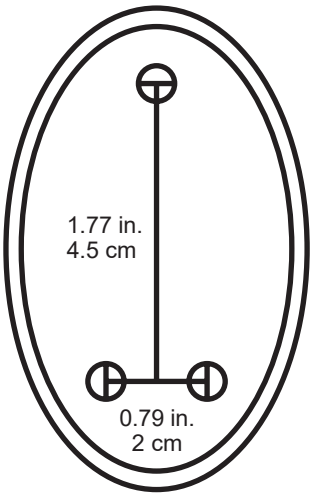

Figure 4

Gate Opener Dimensions

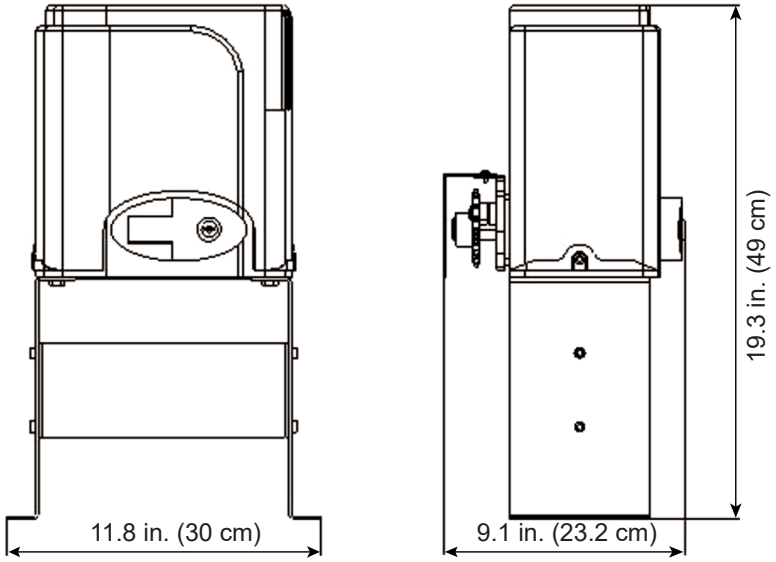

Figure 5

Mounting Plate Dimensions

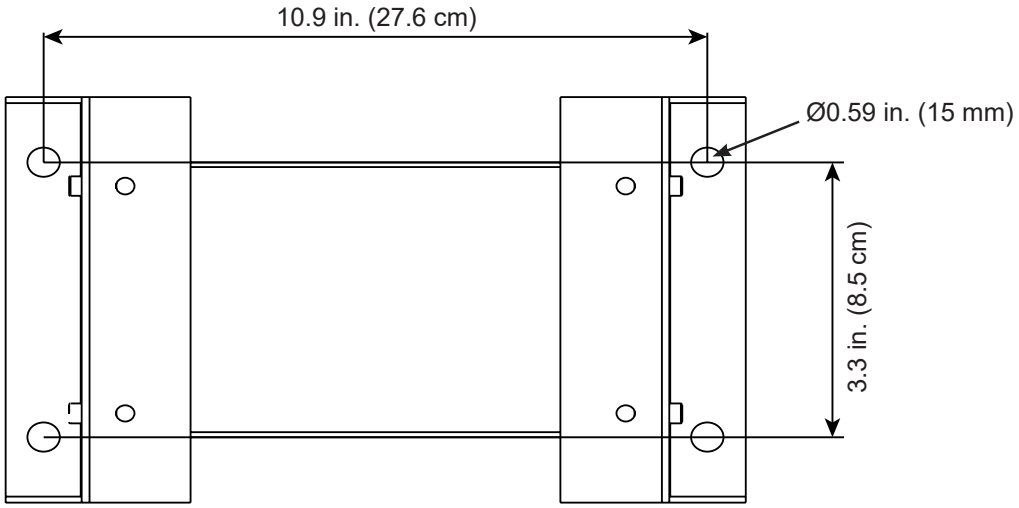

Figure 6

Base Installation

⚠ Your motor **MUST** be firmly secured for safe use. Do not attempt to use it loose or only secured to thin pavement.

1. Use the horizontal mounting plate (I) to brace the two vertical mounting plates (J) as shown. Use the M6×20 bolts (N), spring (U) and flat washers (S), and nuts (Q) to connect the plates so that both vertical plates face inwards on top and the large holes for the foundation bolts face out.
2. If the area beside your gate already has concrete 10 inches (25 cm) or deeper, you can attempt to secure this base into it with your drill and suitable fasteners.

   If not, dig a hole about 20 inches across, 14 inches wide, and 8 in. deep (50×35×20 cm) in the location you have selected for your gate opener. This hole should be located so the motor will be at least one foot (30 cm) inside where the nearest chain bracket will be attached to the gate.

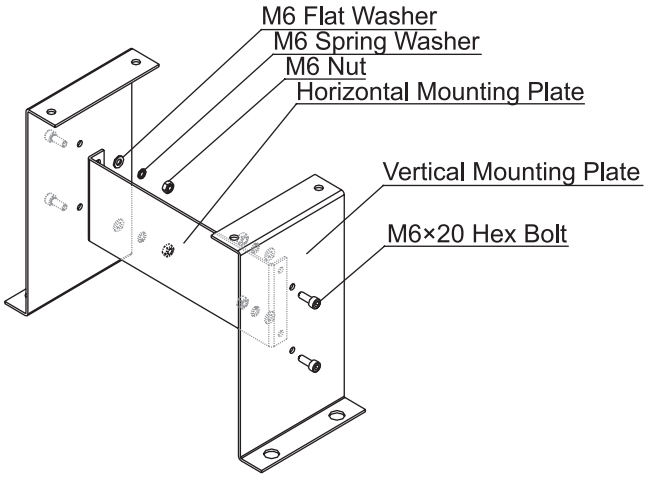

Figure 7

3. Prepare a form box with the same dimensions and fit it into the hole. Nonstick spray can be used to minimize moisture absorption and ease its future removal.
4. Fill the form with concrete. You will need a minimum of 1.25 cubic feet (35 L) of concrete, equivalent to about three standard 60 lb. bags or a little more than two standard 80 lb. bags.

   A metal wire or cage frame can be added near the sides to further reinforce your concrete foundation.
5. While the concrete is still wet, adjust the cables' PVC pipes as needed and insert the four M8 foundation bolts (K) as shown. Remember to allow for the additional 2 inches (5 cm) or so that the chain gears will need between the nearest foundation bolts and the gate.

   It is recommended to coat the bolts with a protective solution to minimize corrosion during their time in the wet concrete and afterward.

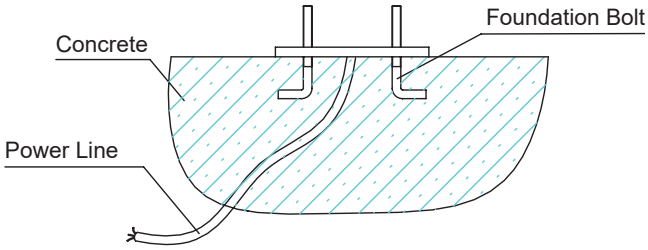

Figure 8

6. Level the upper surface of the concrete.
7. Wait at least 24 hours for the concrete to set, protecting the area from any rain or other weather as needed.
8. Remove the form box from around the concrete and pack the soil tightly back into place. Adjust the concrete and surrounding dirt as needed to ensure it is snuggly fit, firmly positioned, and completely level.

   ⚠ If you ever subsequently notice the gate opener rocking with the concrete during use, add additional concrete or further secure the base as needed.
9. Fix the base onto the foundation bolts using the M8 spring (V) and flat washers (T) and nuts (R). Use additional washers as needed to keep the base completely level.

Motor Installation

1. Remove the plastic casing from the motor (A).
2. Connect the motor to the base using the M8 bolts (P) with their spring (V) and flat washers (T) and nuts (R).

   Adjust the placement of the bolts in their slots to match the expected path of the chain as shown. Normally, the path of the chain will be 1¼ to 1½ inches (32–39 mm) from the inner edge of the gate.

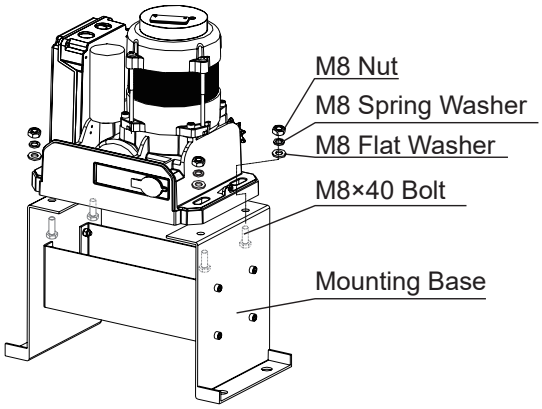

Figure 9

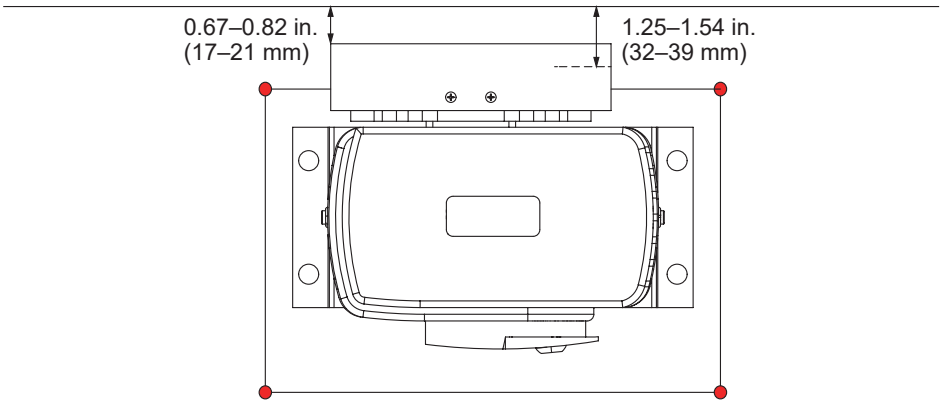

Figure 10

3. Remove the protective cover from the motor circuit board. Keep its fasteners nearby.

   ⚠ **NEVER** make electrical connections while the motor's power supply is active. Disconnect the GFCI or circuit breaker before any wiring adjustment.

4. Connect your 3-core wiring to the main power terminal on the motor's circuit board. Connect the live wire to the **L** pin, the return or neutral line to the **N** pin, and the ground line to the **PE** pin.
5. Insert a manual release key (B) and open the release bar 90° to put the motor into manual mode. Check that its cogs rotate freely by hand.

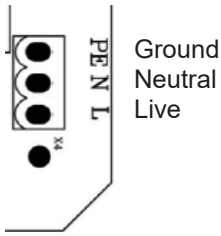

Figure 10

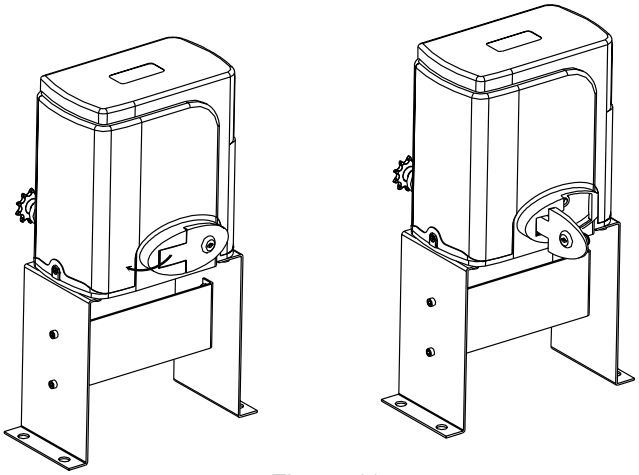

Figure 11

Chain Installation

1. Close the gate.
2. Install the gate brackets (H) at or near each end of your gate. They should face in towards your property and be located at the same height as the two smaller sprockets on the motor. The nearest bracket should be at least one foot (30 cm) away from the motor.

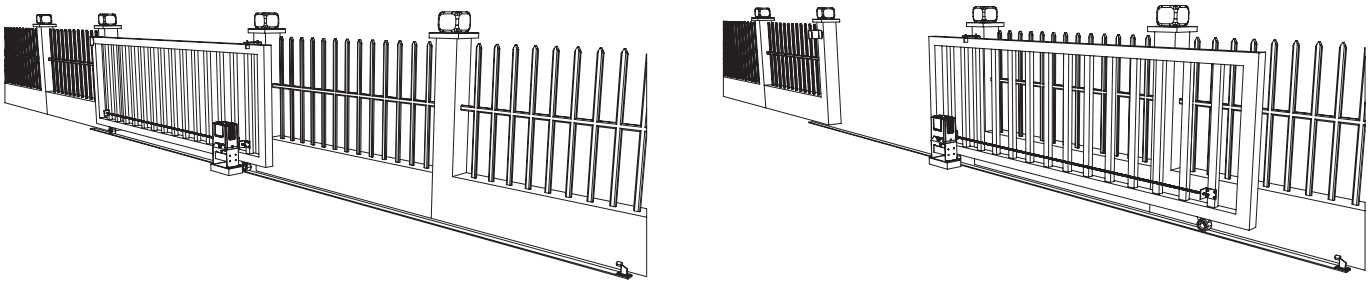

Figure 12

Use the square bolts (G) for gates with square posts and the round bolts (G) for gates with round posts.

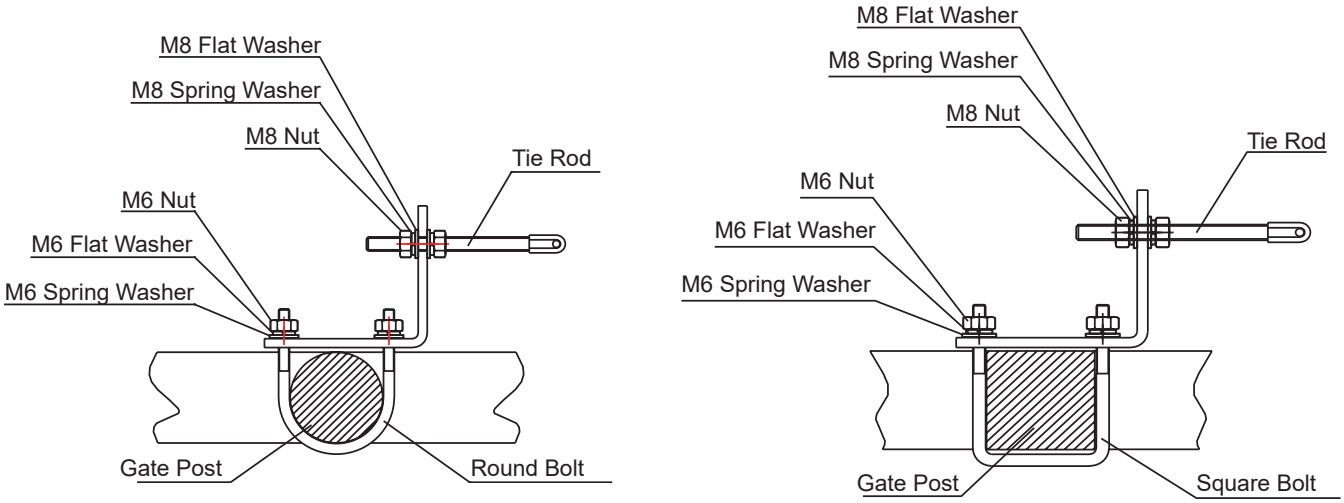

Figure 13

It is recommended to position the brace for the tie rod (F) on the side of the post nearer to the motor, but it can be used in either position if necessary.

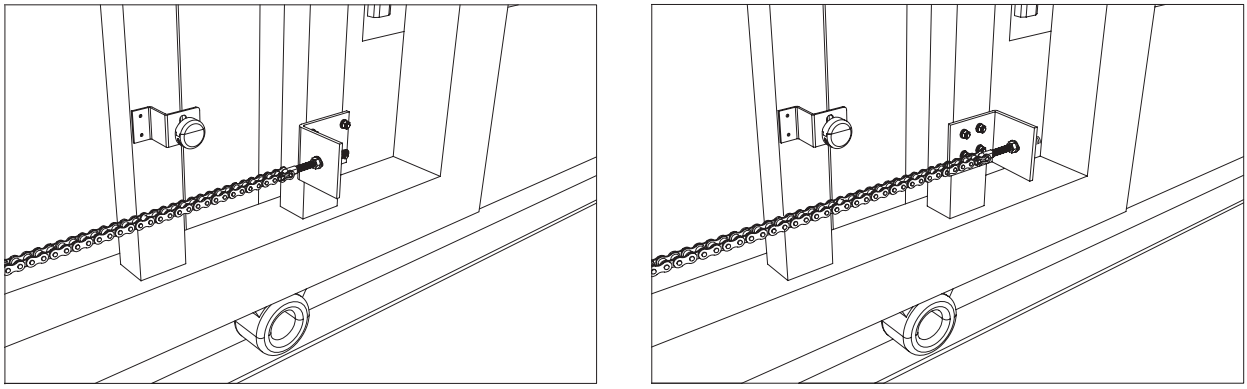

Figure 14

3. Fasten one of the chains (E) to the tie rod of the bracket farther from the motor by opening, positioning, and resealing its final chain link.

   If necessary, repeat the process to connect the two chains to one another or even to add additional lengths of chain.

   ⚠ **ONLY** use ANSI #41 chain with this device and do not use any chain longer than 40 feet (12 m).

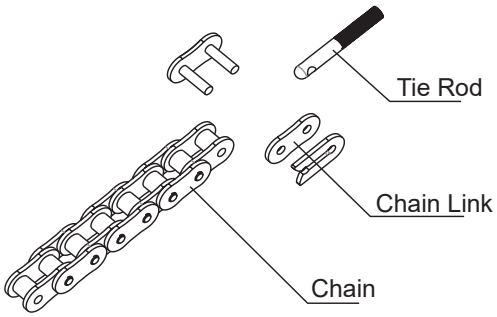

Figure 15

4. Adjust the length of your chain so that it will be roughly taut—neither loose nor tight—once threaded through the motor and attached to the other bracket. Confirm that the chain will run straight from one bracket to the other without requiring the sprockets to support any of the gate's weight.

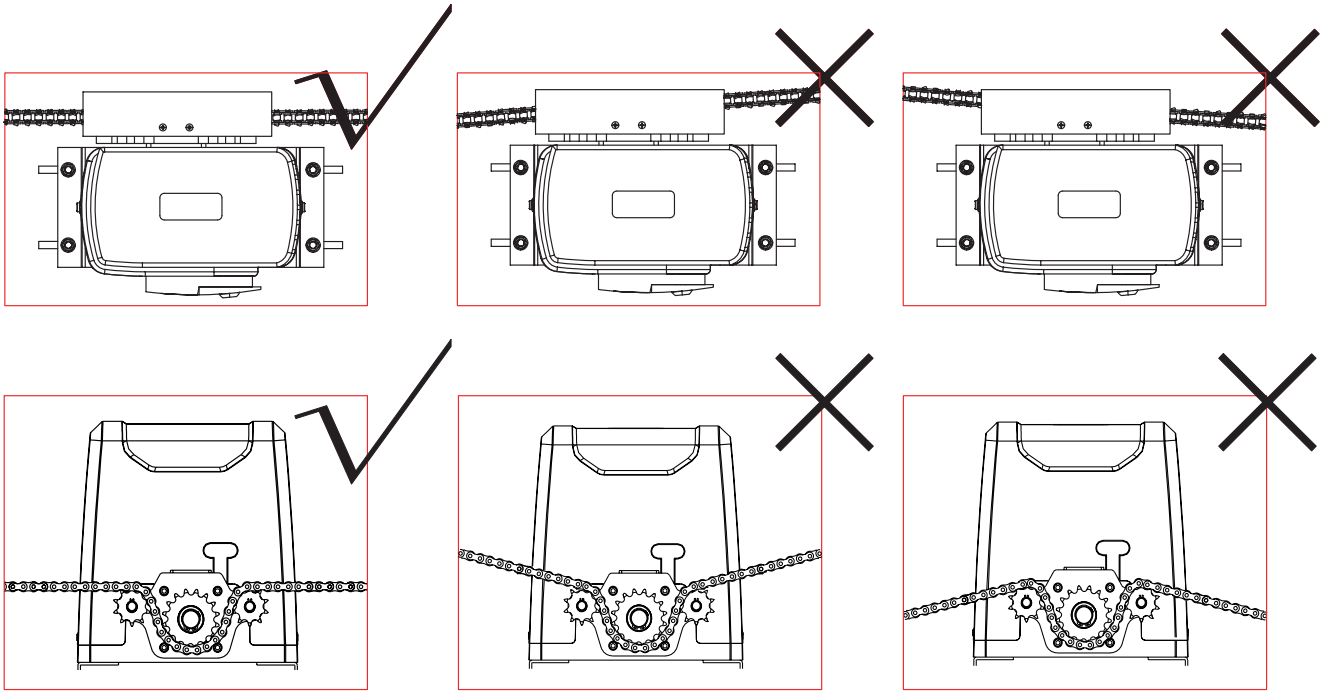
Figure 16

   Adjust the positions of the brackets as necessary but do not position either bracket closer than one foot (30 cm) to the motor.

5. Activate your motor's main power connection. Press the **TEST** button on its circuit board or press any button on either remote control (C). The sprockets should begin to turn. Confirm that they will pull your chain in the correct direction. Press **TEST** or your remote's button again to stop the sprockets and disconnect the motor from power. (If the wheels spin in the wrong direction for their location, see how to reverse their direction below.)
6. Thread the chain through the motor's sprockets as shown. Adjust the position of the motor on its base if needed by loosening, moving, and retightening its M8 bolts.
7. Connect the chain to the tie rod on the second bracket.
8. After finishing adjustment and testing (see below), attach the motor's cover and the sprocket cover (D) using their M4 bolts as shown.

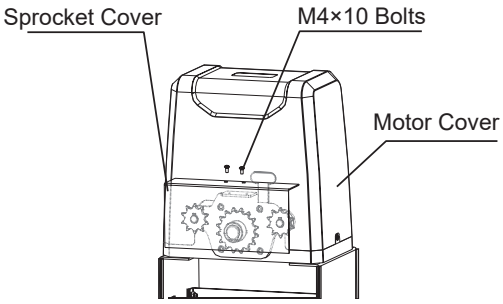

Figure 17

Magnetic Limit Installation

⚠ Using this gate opener without its magnets in the correct position risks damage to the motor and to the gate, including possible derailment.

1. Place the motor in manual mode. Move the gate to the position you want it to go to when fully open.
2. Find the post on the open gate about 6–8 inches (15–20 cm) farther away from your driveway than the middle of the motor.
3. Find the position on that post exactly 3.82 inches (9.7 cm) above the middle of the taut chain.
4. Place one of the magnets (L) there using its bracket and M6×65 bolts (O), spring (U) and flat washers (S), and nuts (Q) or using any similarly secure equipment. The magnet should be held facing the opener with at least 0.4 inches (1 cm) between it and the motor casing.

   ⚠ The magnets and brackets are interchangeable but the functions of their positions are not.

   This higher magnet will function as the **OPEN** limit switch because of the position of the sensors in the motor housing. Reverse the diagrams shown in Figures 18 and 20 for left side installation.

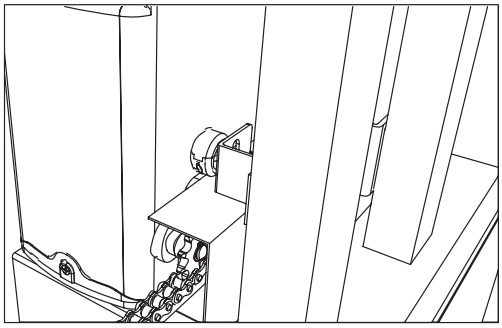

5. Move the gate to the position you want it to lock at when fully closed.
6. Find the post on the closed gate about 6–8 inches (15–20 cm) towards the driveway from the center of your motor.
7. Find the position on that post exactly 1.38 inches (3.5 cm) above the middle of the taut chain.
8. Place the other magnet there using its bracket and fasteners or other similarly secure equipment as before.
9. Fine tune the positions of the magnets during initial testing (see below) so the system gently stops your gate at the best location.

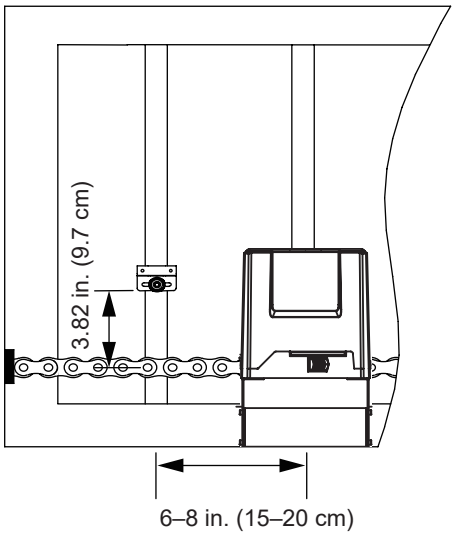

Figure 18

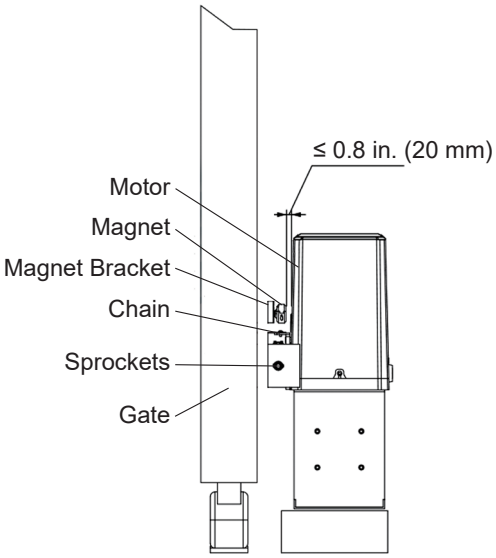

Figure 19

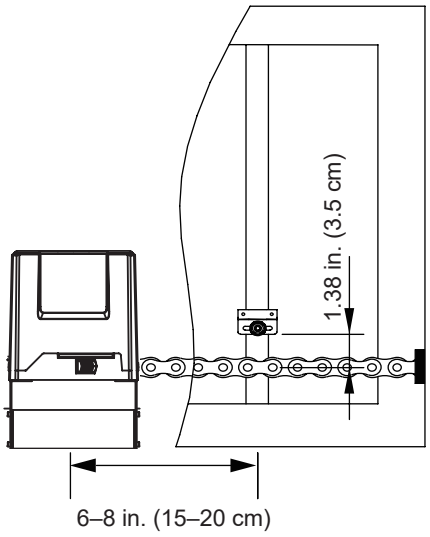

Figure 20

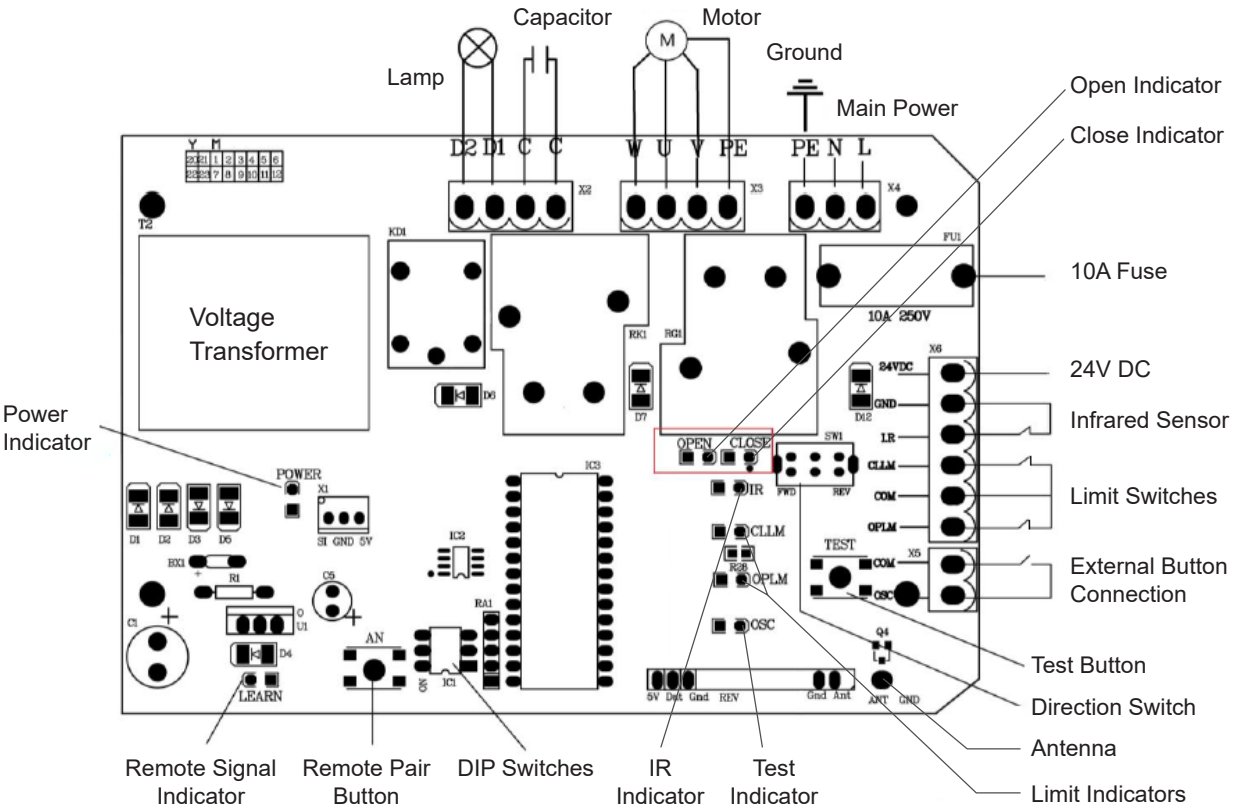

Figure 21

Optional Infrared Sensor Installation

1. Remove the small wire from the motor's circuit board that connects the **IR** and **GND** pins in its infrared sensor terminal.
2. Connect the sensors' wiring to the control board according to Figure 22. The sensors' **V+** pins should be connected to the **24V** pin on the board; their **V-** pins and the receiver's **COM** pin should all be connected to the **GND** pin; and the receiver's **NC** pin should be connected to the **IR** pin.
3. Install the infrared sensor set (Z) near your gate at the positions prepared for them. If possible, cover or otherwise protect them from direct sunlight.

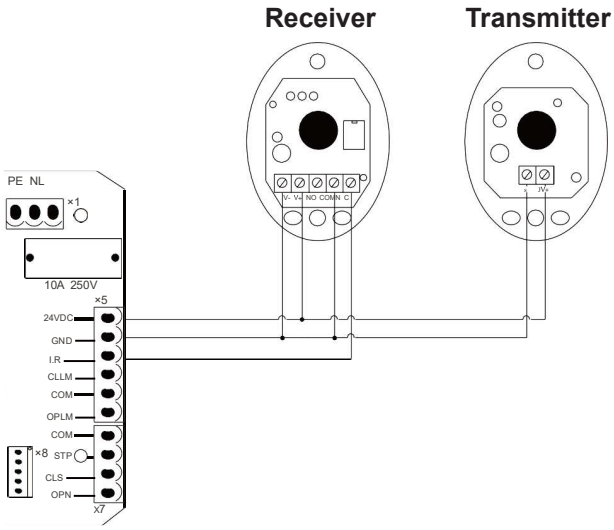

Figure 22

Setting Automatic Closure

To set the gate to automatically close after a predetermined length of time, toggle the middle and right DIP switches on its circuit board.

DIP2	DIP3	Effect
UP	UP	Manual Closure
UP	DOWN	15 Second Delay
DOWN	UP	30 Second Delay
DOWN	DOWN	45 Second Delay

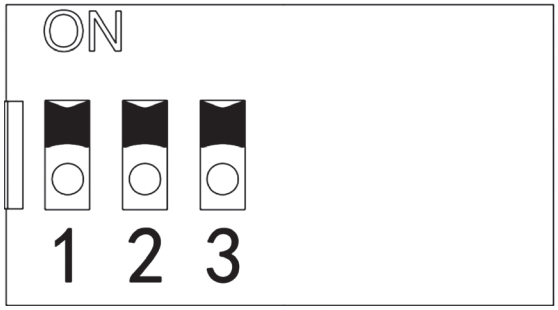

Figure 23

Initial Testing

1. If the motor is located on the right side of your gate, the direction switch on its circuit board should be toggled to Forward (**FWD**). If it is located on the left side, toggle the switch to Reverse (**REV**).
2. Clear any obstacles from the gate's path and keep all bystanders away.
3. Activate the power to your motor. The **POWER** and **IR** indicator lights should come on.
4. Test the infrared sensors by blocking the path between the two sensors with any obstacle. The **IR** indicator light should turn off. Remove the obstacle. The indicator light should come back on.
5. Press the **TEST** button. The Test indicator light (**OSC**) should come on and the gate should begin to move.

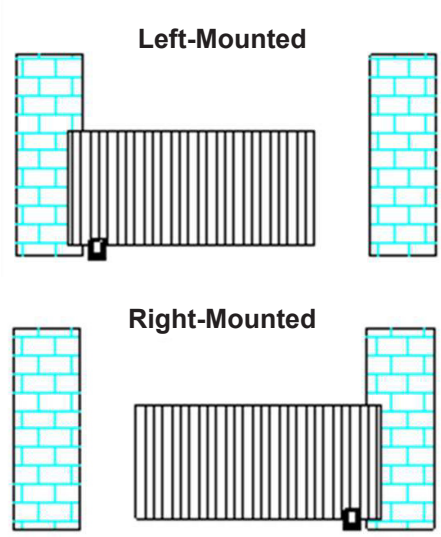

Figure 24

6. While the gate is opening, the **OPEN** indicator light should come on. When the gate reaches the open limit switch, the Open Limit indicator light (**OPLM**) should come on and the gate should come to a stop.

   If the limit switch is so close that it contacts the motor housing or is so distant that it fails to activate the motor's sensor, adjust its support bracket or the motor's placement on its base as needed to correct the problem. If the limit switch stops the gate too early or too late, adjust the location of the magnet's support bracket so that the gate will gently stop in the correct place.
7. While the gate is closing, the **CLOSE** indicator light should come on. When the gate reaches the close limit switch, the Close Limit indicator light (**CLLM**) should come on and the gate should come to a stop. Again, adjust the magnet's support bracket as needed.
8. The top button on your two remote controls (C) should already be paired with your motor. They use a single control mode at a distance of up to 98 feet (30 m). Pressing either button should cycle through the commands OPEN→STOP→CLOSE→STOP. The remote indicator light (**LEARN**) should come on each time a signal is received.

   Test both remotes through the full cycle of commands. Test that the open and close limit switches function properly while the motor is being controlled by the remotes. If you have chosen to use the automatic close function, you can test that it works correctly at the same time. Open the gate, wait the set amount of time, and see if the gate begins closing automatically.
9. Deactivate the power to your motor using its circuit breaker. If any abnormalities have been detected during testing, make the necessary adjustments—e.g. by repositioning the infrared sensors or magnetic limit switches—or contact Customer Service for help.
10. Replace the circuit board, motor, and sprocket covers and their fasteners.

Remote and Wireless Keypad Pairing

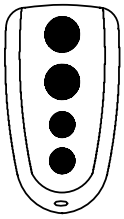

Figure 25

1. Up to 23 additional remote or wireless control buttons can be paired to the gate's circuit board. Be sure that they use the 433.92 MHz radio band or can be configured to do so.

   ⚠ **NEVER** pair the same button to 2 different gates or devices at the same time.

   Disconnect the motor from power, open its covers to expose its circuit board, and restore power.
2. Press the pairing button (**AN**). The remote indicator light (**LEARN**) should come on.
3. Press the button on the remote control to be paired or enter the correct passcode and press the open button on your wireless control.
4. Press the same button on the remote again or reenter the passcode and press the open button again on your wireless control. The remote indicator light should flash and go out.
5. The button or keypad is now paired and can be used to open or close the gate. This pairing should remain stored in memory even when power to the gate opener is cut accidentally or at the circuit breaker.
6. Test that the gate responds correctly to commands from the new remote button or keypad. When you are finished pairing and testing, replace the motor's covers and fasteners.

For community gates where multiple commands may accidentally be sent at the same time, it is recommended that **DIP1** on the circuit board be set to its **UP** position. This will cause the device to only process commands from wireless controls to open; it will not process any commands to pause or close the gate.

⚠ When this mode is used, **DIP2** and **DIP3** must be set to one of the automatic close options or the gate will require a remote control or manual assistance to close again.

To erase all stored controls from memory, press and hold the pairing button. The remote indicator light should come on at first and then go out as the board's memory is purged.

Maintenance

- Always supervise children and pets near the gate, the motor, and their controls to prevent accidents.
- Always fully disconnect your motor from its power supply before removing its cover or making any adjustments to its wiring. Use trained technicians for rewiring or repair work.
- Keep your chain and track clean and free of any corrosion, grime, or obstructions.
- Lubricate wheels and rollers as needed.
- If your gate is not in regular use, test it at least once a month. If any problems are noticed during testing or normal use, disconnect the motor from power, unlock the gate, and test manually that it still moves smoothly on its own. Tighten, repair or replace problematic parts as needed. Only use identical components, and fully replace damaged or malfunctioning electrical cables.

Troubleshooting

Potential Problems	Possible Solution(s)
The gate does not open or close normally and no indicator lights activate on the circuit board, even when pressing the **TEST** button.	Verify that the power supply is functioning properly.
	Check that the fuse is not blown.
	Have a certified electrician rewire your system.
The door opens but does not close.	Remove any obstacles which might be in the gate's path.
	Confirm that the magnets' placement and the circuit board's direction switch match your motor's position as discussed above.
	Replace the short wire between the **IR** and **GND** pins on the circuit board's infrared sensor terminal or correct the wiring for your infrared sensors.
A remote control does not active the gate.	Change the remote control's battery.
	Pair the remote control to the board again.
	Remove any obstruction between the motor and the remote.
The motor makes noise but the chain and gate do not move.	Remove any obstruction from the motor, sprockets, chain, or gate path.
	Have a certified electrician test the gate opener's capacitor, and replace or rewire it if necessary.
The circuit breaker trips repeatedly.	Remove any other devices from the circuit providing the motor's power and confirm it is not unstable or experiencing surges.
	Have a certified electrician check the power supply line and motor line for short circuits. Repair if necessary.
The gate suddenly stops or reverses when moving.	Remove any obstacles which might be in the gate's path.
	Check the infrared sensors, their wiring, and the circuit board indicator lights, adjusting as necessary.
	Check the magnets, their placement, and the circuit board indicator lights, adjusting as necessary.
An obstruction to the IR sensors stops the gate from opening but doesn't stop it from closing.	Correct the direction settings on the circuit board to match your motor's placement.

Disposal

Electrical products should not be disposed of with household products. In the EU and UK, according to the European Directive 2012/19/EU for the disposal of electrical and electronic equipment and its implementation in national laws, used electrical products must be collected separately and disposed of at the collection points provided for this purpose. Locations in Australia, Canada, and the United States may have similar regulations. Contact your local authorities or dealer for disposal and recycling advice.

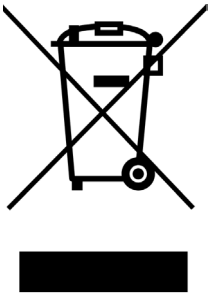

Contact Us

Thank you for choosing our products! If you have any questions or comments, contact us at **contact@b2csupportpro.com** and we'll resolve your issue ASAP!

For a .pdf copy of the latest version of these instructions, use the appropriate app on your smartphone to scan the QR code to the right.