BREEO

USER GUIDE

X SERIES 42 FIRE PIT

CORTEN & STAINLESS

MEET YOUR CROWD PLEASER

Fire it up and feast like a king with Breeo's X Series® 42, the largest smokeless fire pit you can buy. With a 42 inch interior diameter, the X42 is perfect for large-scale gatherings, radiating heat and expanding your live-fire cooking capacity. From vacation rentals to microbreweries and wedding reception halls, the X42 can warm them all.

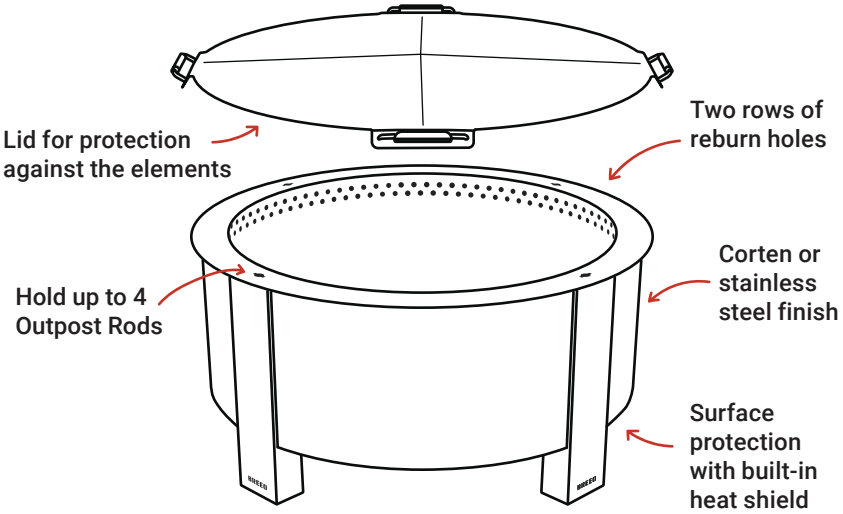

FEATURES

LIVE-FIRE COOKING: With enough space to hold up to 4 Outpost™ Rods, skillet rests, griddle attachments, and more, you'll never have to worry about feeding a crowd again.

CROWD PLEASER: With an exterior diameter of 46 inches and capacity for almost a full cord of wood at once, the X42 radiates more heat and gathers more people than any other smokeless fire pit on the market.

SMOKELESS TECHNOLOGY EXPANDED: An upgraded X Airflow® system, and additional row of secondary combustion holes allow for a smokeless fire on a larger scale.

SURFACE PROTECTION: The built-in heat shield and added height counters the excess heat output beneath the fire pit due to the size, and allows the X42 to be used on non-combustable surfaces.

LID INCLUDED: Complete with four handles and engineered bends for rigidity, this single piece stainless steel lid will keep your fire pit protected from the elements when you aren't burning.

AVAILABLE IN CORTEN* STEEL OR STAINLESS STEEL FINISH

**Corten steel arrives with the reddish iron oxide patina*

SETTING UP

1 REMOVE YOUR FIRE PIT

Remove your fire pit from the box.

We recommend 3-4 people lift for placement.



2 PLACE YOUR FIRE PIT

Always place your Breeo X Series® fire pit on a level, fireproof surface such as rock, stone, or dirt.

Never use your X Series on wooden or composite decks, stamped concrete or any heat sensitve surfaces.



TENDING

Every component on your new Breeo X Series smokeless fire pit is built to last. You can leave your X Series fire pit out in the elements year-round without worry and with minimal care. But of course, the more you use your X Series fire pit, the more ash will build up in the bottom. From time to time, you'll want to scoop out debris to keep your X Series fire pit performing at its best. ***And remember: always remove the ashes from your X Series fire pit before long-term storage.***

CORTEN FINISH

Corten is a steel alloy that looks better with age—and without much upkeep. The Corten finish on your X Series fire pit requires nothing more than the occasional spot-cleaning with a dry wire brush or damp cloth.

STAINLESS STEEL

We use grade 304 stainless steel for rugged good looks and ultra-low maintenance. But occasionally, you might want to clean the stainless steel components of your X Series fire pit. We recommend your favorite stainless steel cleaner and a soft cloth.

WARNING

The Breeo X Series® smokeless fire pit is designed for outdoor use only. ***Never use your X Series fire pit in a building, garage, or any enclosed area***.

Always place your X Series fire pit on a level, fireproof surface such as the Breeo Base, rock, stone or dirt.

Never use your X Series fire pit on wooden or composite decks, stamped concrete or any heat sensitive surface.

Do not move or store your X Series fire pit until all ashes and coals are extinguished and all surfaces have cooled completely. Never touch ashes or coals to see if they are hot.

All surfaces of the fire pit will become extremely hot when in use. To avoid burns, don't touch any part of the fire pit until it's completely cool (unless you're using protective gear like hot pads, potholders, etc.).

Exercise the same caution you would with any open fire. When using your X Series fire pit, ***never leave it unattended, especially around children and pets.***





COMPLETE YOUR SETUP



OUTPOST™
KETTLE HOOK



CAST IRON
KETTLE

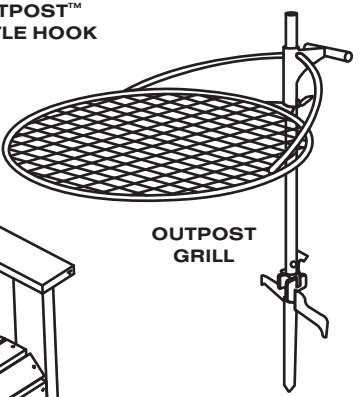

OUTPOST
GRILL

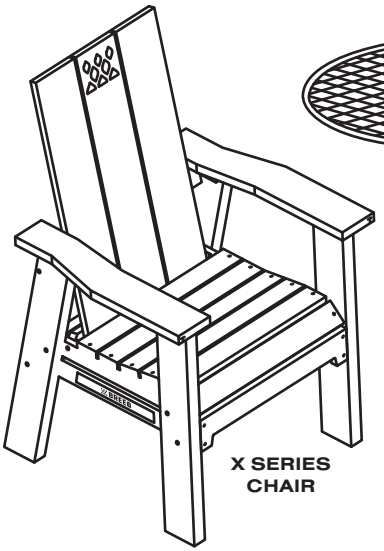

X SERIES
CHAIR



304™
TONGS



BUILDING A FIRE

1 CHOOSE YOUR FUEL.

Select a firestarter material, like shredded newspaper or cardboard, a dry, thinly split softwood for kindling, and a dry, split hardwood for your main fuel. Make sure your fuel is less than 4" in diameter. ***Focus on creating as much airflow as possible throughout the whole fire building process.***



2 BUILD A LOG CABIN.

Start with 2 full-size pieces of cordwood and lay them caddy-corner on the X Airflow® system across from each other. Then, lay two pieces of kindling perpendicular across those. Fill the inside square with your firestarter. Continue with the pattern in kindling until it approaches the top of your fire pit, filling the center with firestarter as you go, if you're using newspaper or cardboard. If you're using another type of firestarter, you can place it in the middle when you start building, but there's no need to fill the whole structure with it. Taper the "cabin" inward as you get close to the top.

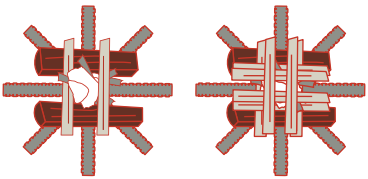

Build a log cabin from the center

3 LIGHT IT UP.

Using a grill lighter or a long match, light the firestarter at the bottom of the log cabin. ***We do NOT recommend using regular matches, as they can be harder to use when you're reaching into the fire pit.***

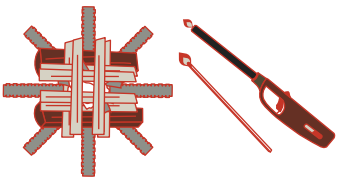

Start the fire with a grill lighter or long match

4 FEED THE FLAMES.

Once you've got a tiny blaze going, start adding cordwood without disrupting or knocking over the kindling cabin. Starting with smaller cordwood pieces and gradually using larger ones as the fire grows, lay the pieces toward the perimeter of the bottom of the fire pit. This will help your fire spread evenly around your fire pit.

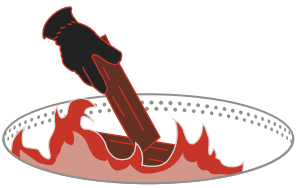

Add firewood to keep the fire smokeless

5 LET IT BURN OUT.

When you're done with your fire, patiently wait for the fire to burn out on its own. ***Don't pour water on it, and never leave your fire unattended.*** If you do need to walk away, always cover with a spark screen and make sure there's nothing near the fire pit that could catch on fire or be damaged. Clean out the ashes every 4-5 burns once the fire pit cools to maintain airflow and always have a smokeless fire.



Let the fire naturally burn out

WARRANTY

Breeo, LLC warrants to the original purchaser that the Breeo Fire Pits and Accessories are free from workmanship and material defects during the lifetime of the original purchaser. In addition Breeo, LLC warrants no rust through or burn through for a period of five (5) years from purchase. If a product is covered by this limited warranty, Breeo, LLC, at its option, will repair or replace with a new product free of charge, excluding any applicable shipping and handling charges. If the product being warranted has been discontinued, the replacement product will be of equal or similar value. Altering any Breeo product, or using the product in any way other than the intended use, will void this Lifetime Warranty. Except as provided above, no warranty is offered on rust, paint or finishes due to being made with material with potential for corrosion. Steel products will develop a natural iron oxide patina over time.

Breeo, LLC's liability and obligation is limited to repair or replacement of the product, at their option. The purchaser must provide Breeo, LLC with photos of the product's defects for evaluation. Upon approval of warranty, Breeo, LLC will issue a return for repair, or return for exchange of the defective product.

This warranty does not cover damage or product failure caused by normal wear and tear, accident, misuse, negligence, tampering, modifications, act of war, overloading, improper attachment, improper maintenance, or failure to maintain. Breeo, LLC is held harmless for any injury or death caused by the misuse of this product. This warranty does not cover damage caused by proper or improper use of our products to any surrounding surfaces, structures, or furnishings. This includes, but is not limited to, discoloration or damage to a patio or deck surface, furniture, house, or any other structure.

This warranty gives you specific legal rights providing said product is put to its proper designated use.
THIS WARRANTY IS EXPRESSLY IN LIEU OF ALL OTHER WARRANTIES, EXPRESS OR IMPLIED, INCLUDING THE WARRANTY OF MERCHANTABILITY AND FITNESS FOR A PARTICULAR PURPOSE. NO ORAL AGREEMENT, GUARANTEE, PROMISE, REPRESENTATION OR WARRANTY SHALL BE BINDING. IN NO EVENT WILL BREEO, LLC BE LIABLE FOR ANY SPECIAL, INDIRECT, INCIDENTAL OR CONSEQUENTIAL DAMAGES EVEN IF BREEO, LLC HAS BEEN ADVISED OF THE POSSIBILITY OF SUCH DAMAGES AND EVEN IF BREEO, LLC HAS KNOWLEDGE THAT FAILURE TO PERFORM COULD CAUSE CONSEQUENTIAL ECONOMIC LOSSES. IN ANY EVENT, CUMULATIVE DAMAGES FOR BREACH OF THIS WARRANTY WILL BE LIMITED TO THE AMOUNT ACTUALLY PAID TO BREEO, LLC FOR THE PRODUCT. THIS PARAGRAPH SHALL APPLY TO ALL ACTIONS RELATED TO THE PRODUCT, WHETHER BASED ON TORT, CONTRACT OR OTHER THEORIES. THE PURCHASER ACKNOWLEDGES THAT THIS PARAGRAPH ALLOCATES THE RISK OF PRODUCT FAILURE BETWEEN BREEO, LLC AND THE PURCHASER, AND THAT THIS ALLOCATION IS REFLECTED IN THE PRICE PAID.

EARN POINTS & ENJOY MEMBERSHIP BENEFITS

BECOME A FIREMASTER

1 SIGN UP
Create an account and earn points.
breeo.com/pages/rewards

2 EARN POINTS
Every time you shop.

3 REDEEM POINTS
For exclusive discounts and products.

BREEO

BREEO.COM
(800) 413-9848
CONTACT@BREEOLLC.COM

©2023 Breeo LLC. All rights reserved. 10/23

SHARE & TAG US ON SOCIAL

@BREEO