Dining Table And Chairs 5 Pieces Set

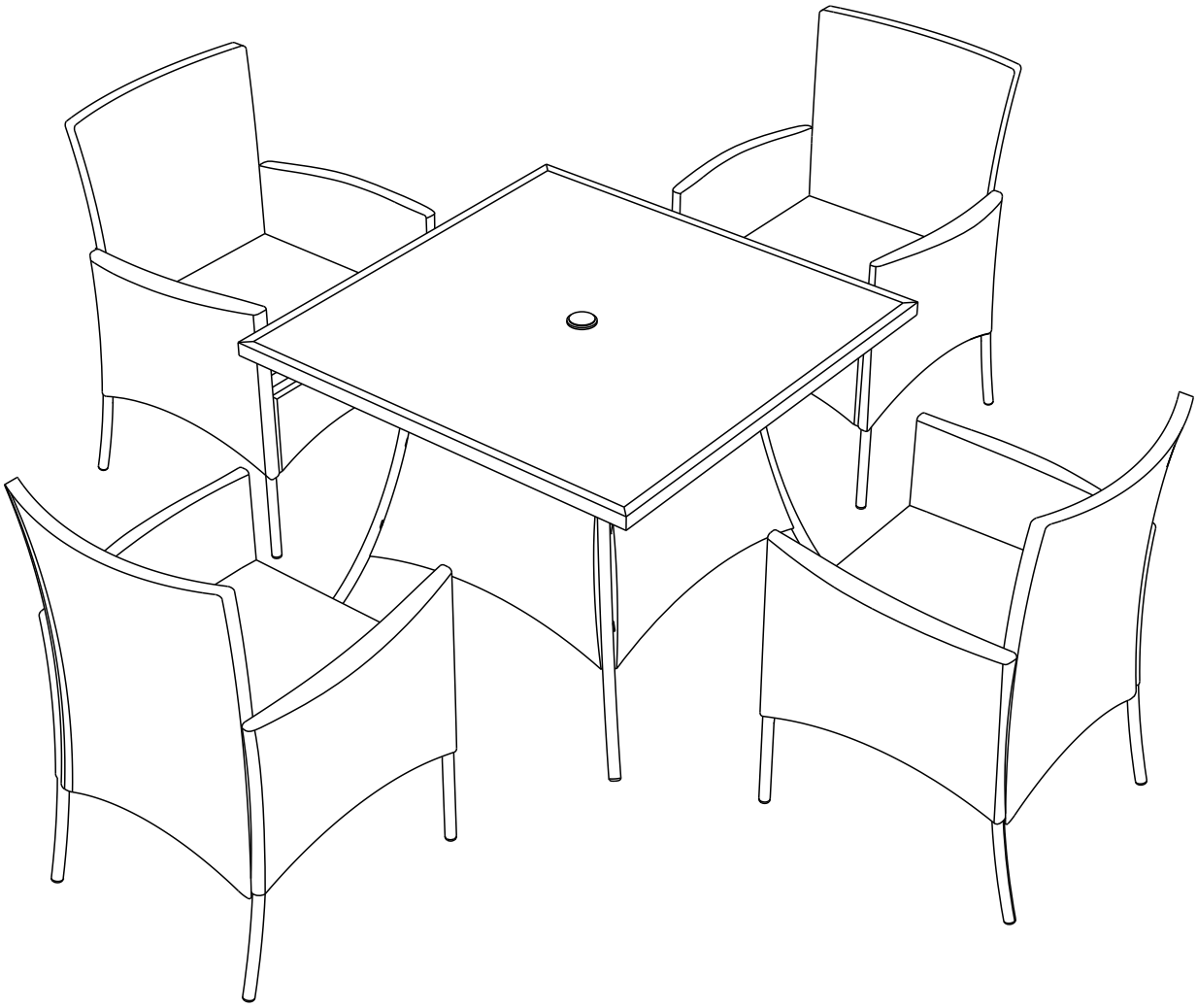

05T66C66-24

IMPORTANT

PLEASE READ BEFORE YOU COMMENCE ASSEMBLY

Follow the guidelines in this user guide to ensure correct assembly and care for this product

SPECIFICATIONS

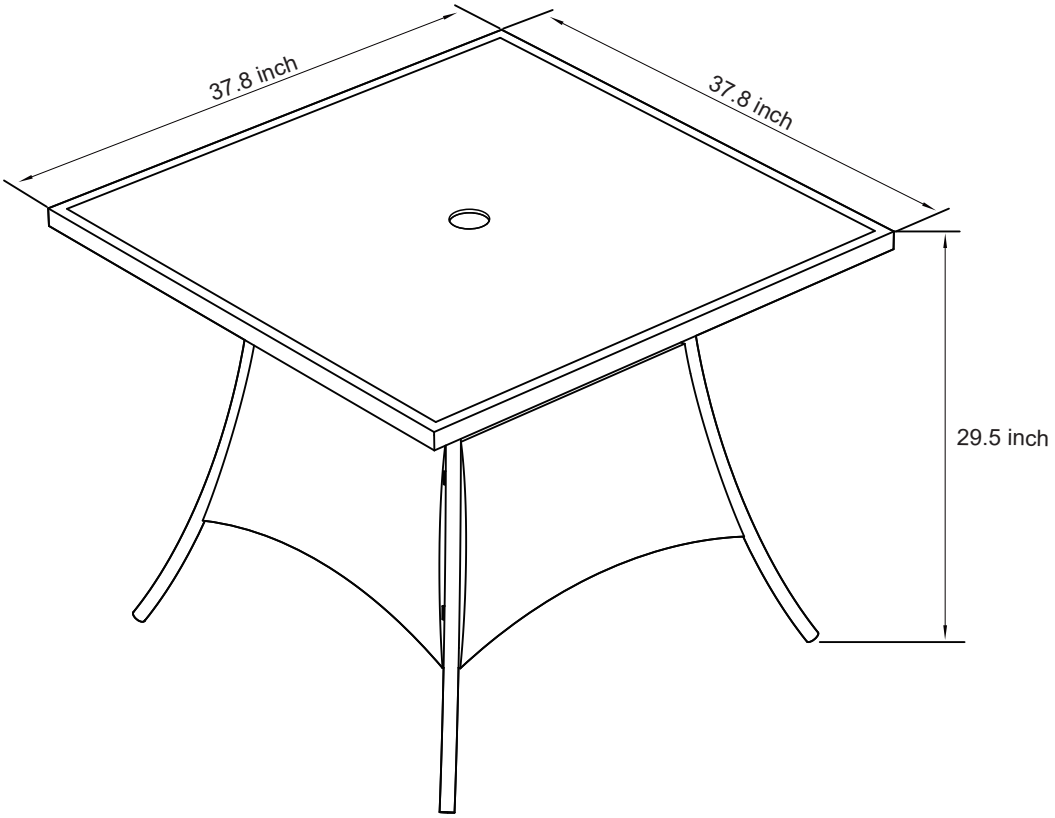

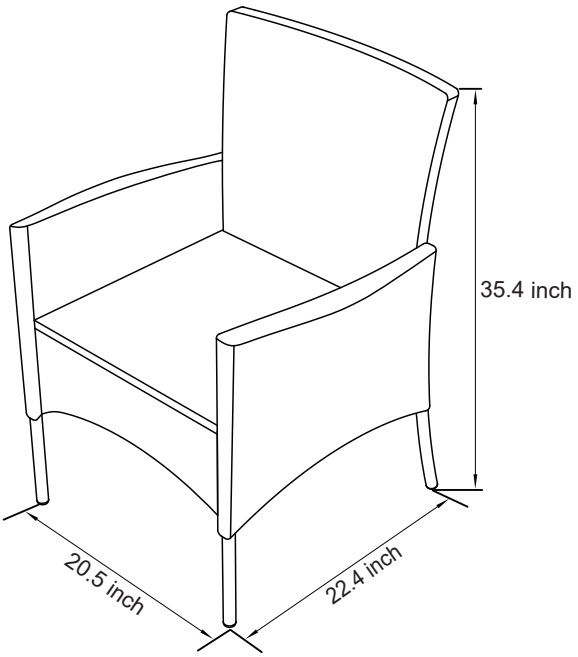

Instructions

Thank you for ordering the dining table and chairs 5 pieces set,here are some tips which may help you:

1.The cushions are vacuum packed,after you open the package,they will fully return to the original thickness after a while.

2.If any part is damaged or missing(please refer to packing list on page 5~6),please feel free to contact us.We will send you the replacement immediately.

3.In order to prolong the sofa set's service life,we suggest that you put all the cushions indoor on a rainy day.

4.We hope you can enjoy our product,if you have any other problem,please feel free to contact us.

Contact US:
Service@alaulm.com
www.alaulm.com

How To Cover Holes & Repair Broken Wicker

Step 1

Step 2

Step 3

Step 4

You can use two pieces PE wicker to cover the hole,and repeat the steps to cover all the holes.
These PE wicker can also be used to repair the scratch or broken wicker.

Catalog

Specifications.....01

Instructions.....02

Packing List.....04

Parts List.....05

Extra.....07

How to Assemble The Dining Table 08

How to Assemble The Glass 10

How to Assemble Dining Chairs 11

Packing List

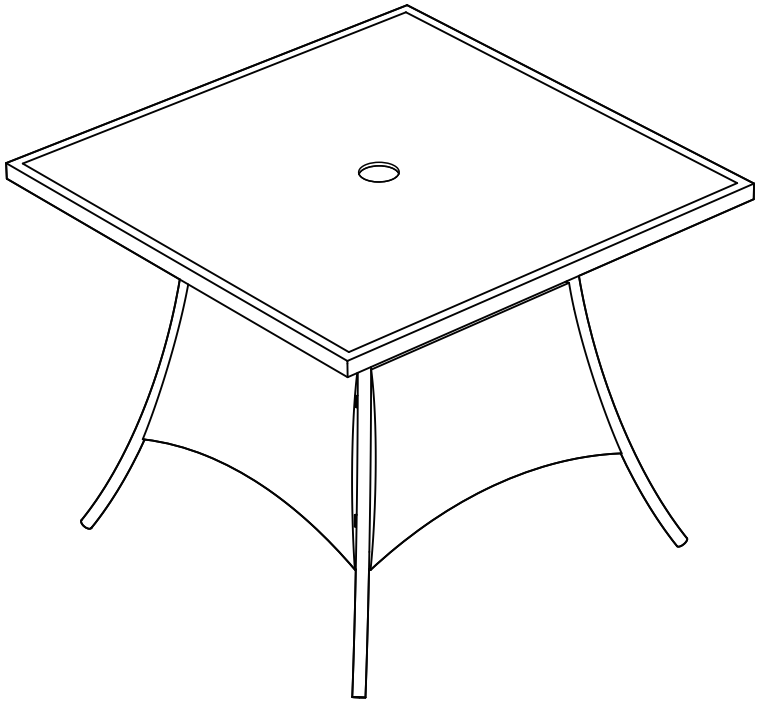

Dining Table

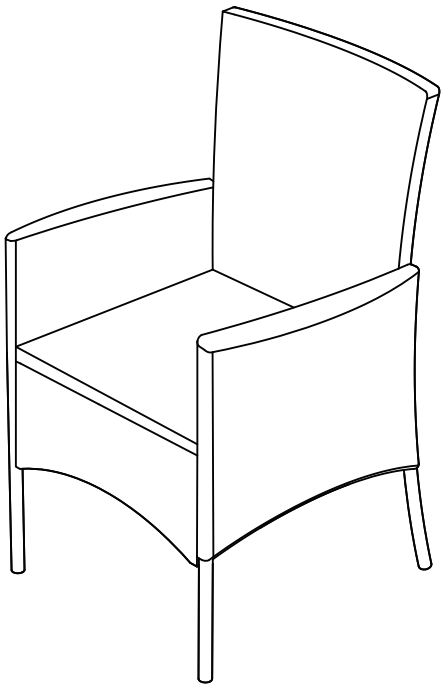

Dining Chairs Set x4

PARTS LIST

Part	Icon	Description	Qty
A	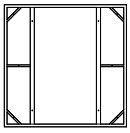	Desktop	1PC
B	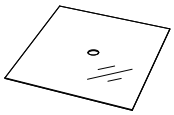	Table Glass	1PC
C	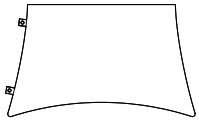	Dining Table Stopper	4PCS
D		Table Legs	4PCS
E	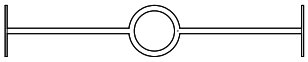	Metal Fixings	1PC
F	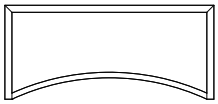	Chair Front Baffle	4PCS
G	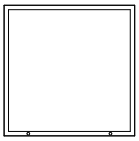	Chair Base Plate	4PCS
H		Left Armrest	4PCS
I	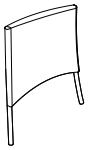	Right Armrest	4PCS
J		Backrest	4PCS
K	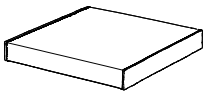	Cushions	4PCS

PARTS LIST

Part	Icon	Description	Qty
L		M6x15	8PCS
M		M6x30	8PCS
N		M6x35	36PCS
O		M6x40	16PCS
P		M6	2PCS
Q		Glass Pad	12PCS
R		U-Shaped Connector	2PCS
S		Plastic Fixings	1PC
T		M6 Gaps	8PCS
U		Feet	20PCS
V		Gaskets	8PCS

Extra			
Part	Icon	Description	Qty
L		M6x15	2PCS
M		M6x30	2PCS
N		M6x35	4PCS
O		M6x40	4PCS
Q		Glass Pad	4PCS
T		M6 Gaps	2PCS
U		Feet	3PCS
V		Gaskets	2PCS
-		Rattan	1PC

WARNING:Failure to locate parts in accordance with these diagrams, or failure to use special parts provided with this equipment, may result in property damage or personal injury.

Step 1:Rotate the table leg(D) 45° and use the screws(L) to connect the leg to the desktop(A).

NOTE:Do not tighten all screws now.

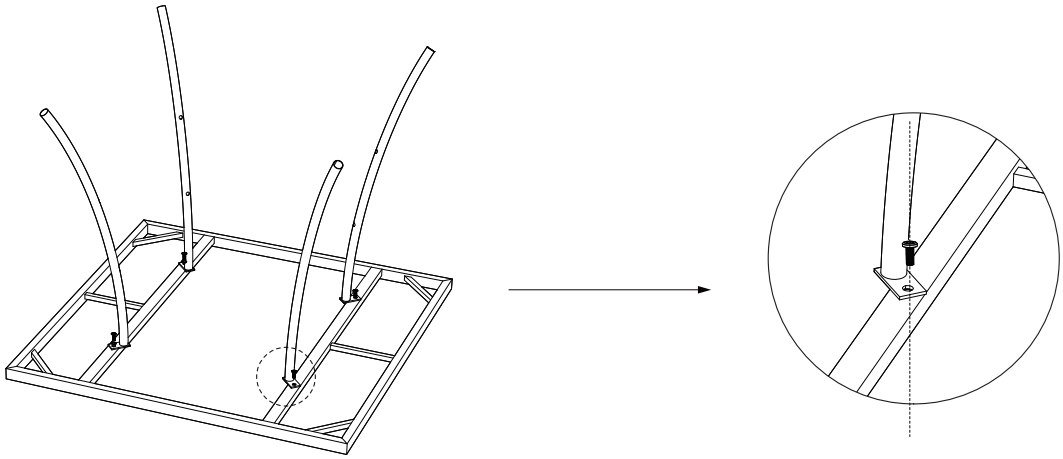

A	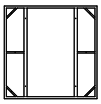	x1	D		x4
L	M6x15	x4			

Step 2:Place the lugs of the table stopper(C) between the other stopper and the table leg(D), and connect them with screws(O).

NOTE:Do not tighten all screws now.

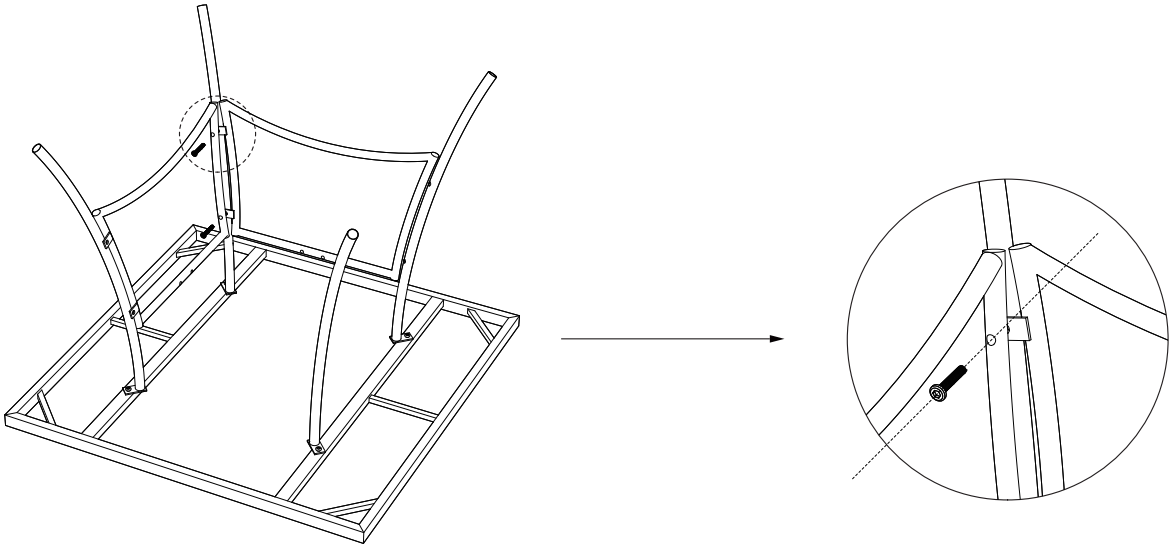

C	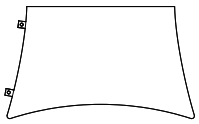	x2	O	M6x40	x2

Step 3:Connect the other three stoppers(C) with screws(O).
NOTE:Do not tighten all screws now.

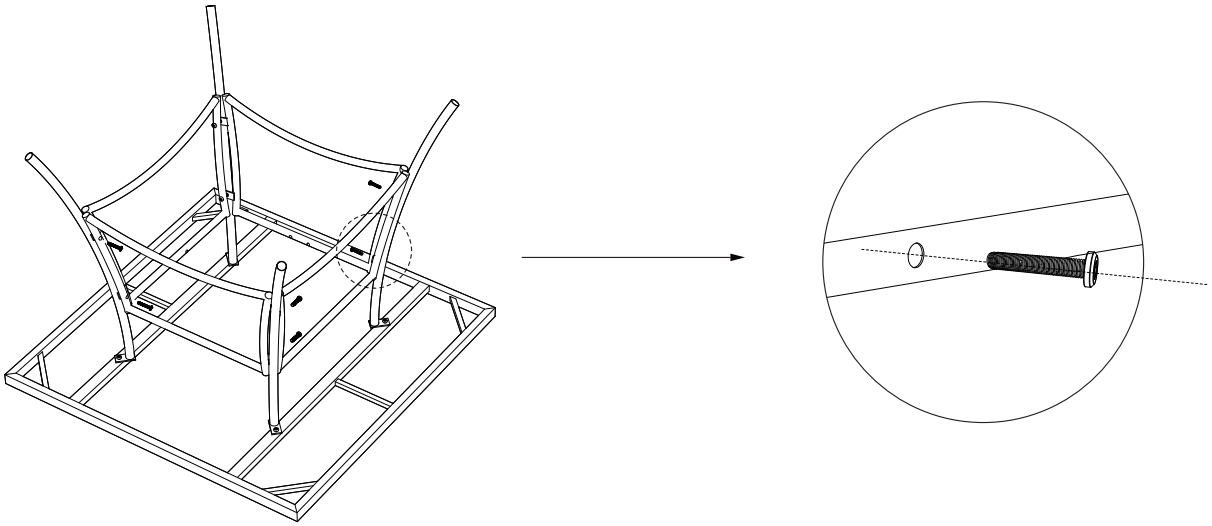

C 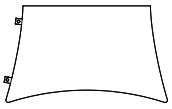 x2 O M6x40 x6

Step 4:Connect the metal fixings(E) to the table stopper(C) with screws (L).
NOTE:Please check all accessories are correct, then tighten all screws now.

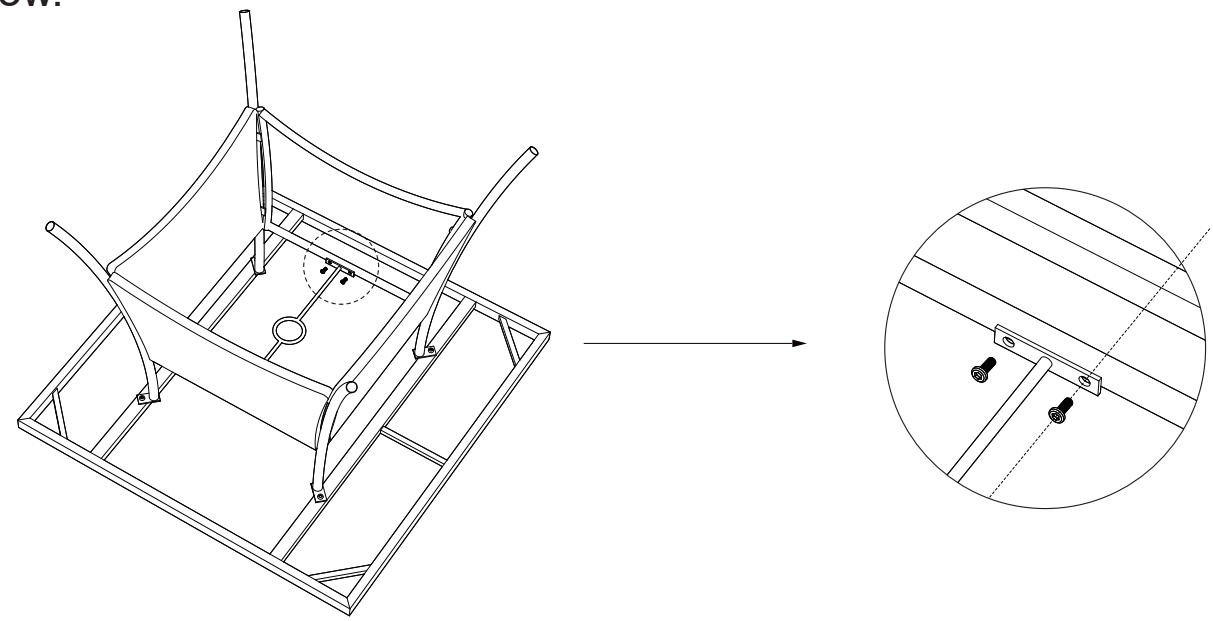

E 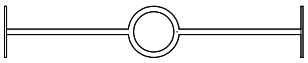 x1 L M6x15 x4

Step 5:Place the glass pad(Q) on the metal piece of the desktop(A).

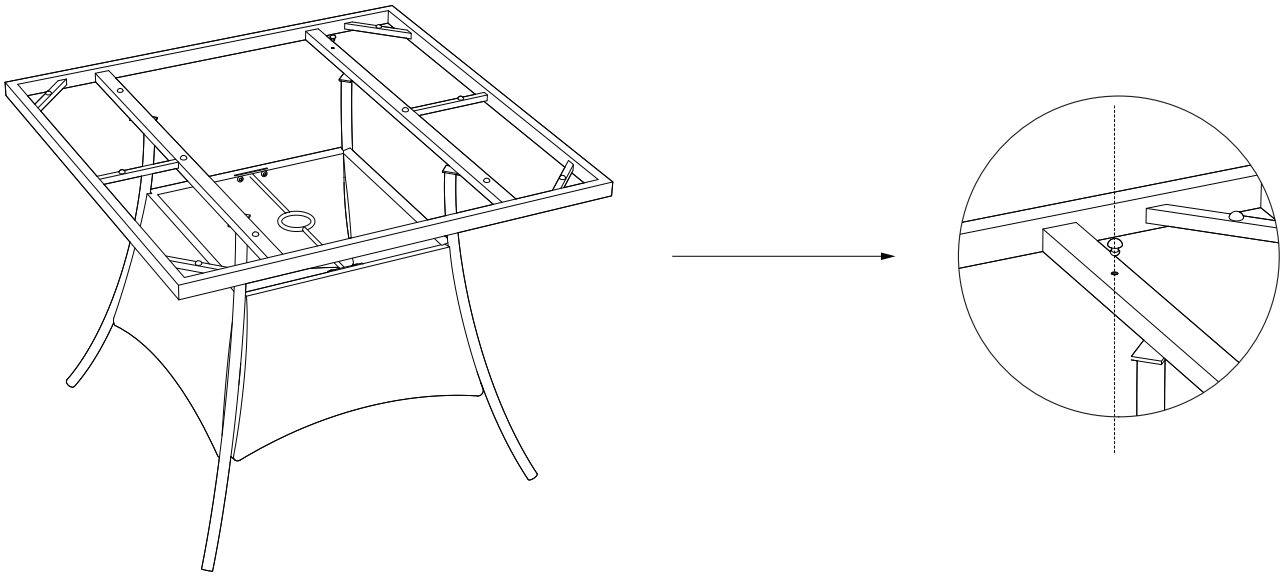

Q 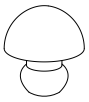 x12

Step 6:Place the table glass(B) on the surface of the desktop.

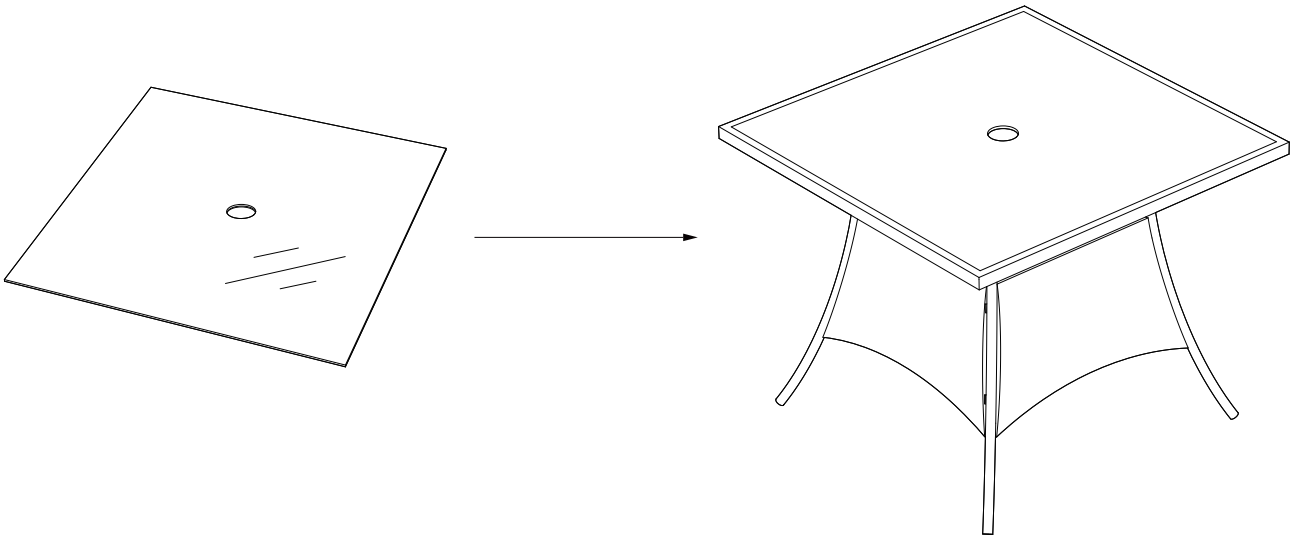

B 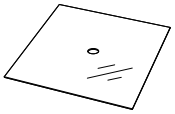 x1

Step 7:Insert the plastic fixing(S) into the glass hole and screw to lock it tightly, cover with the lid.

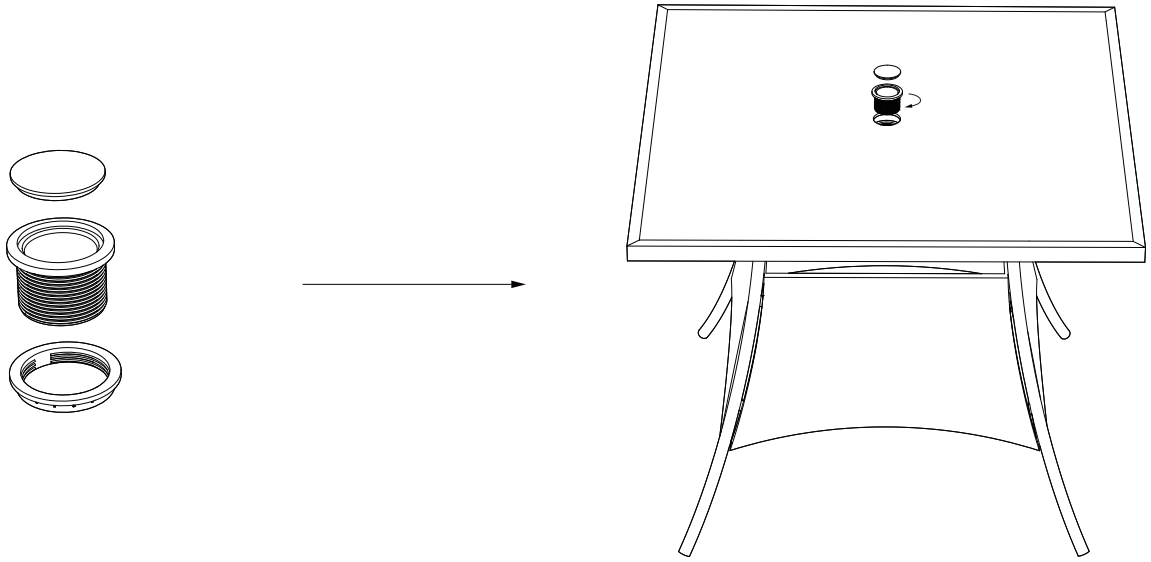

S 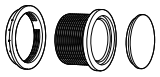 x1

Step 8:Insert the sun umbrella into the table hole.

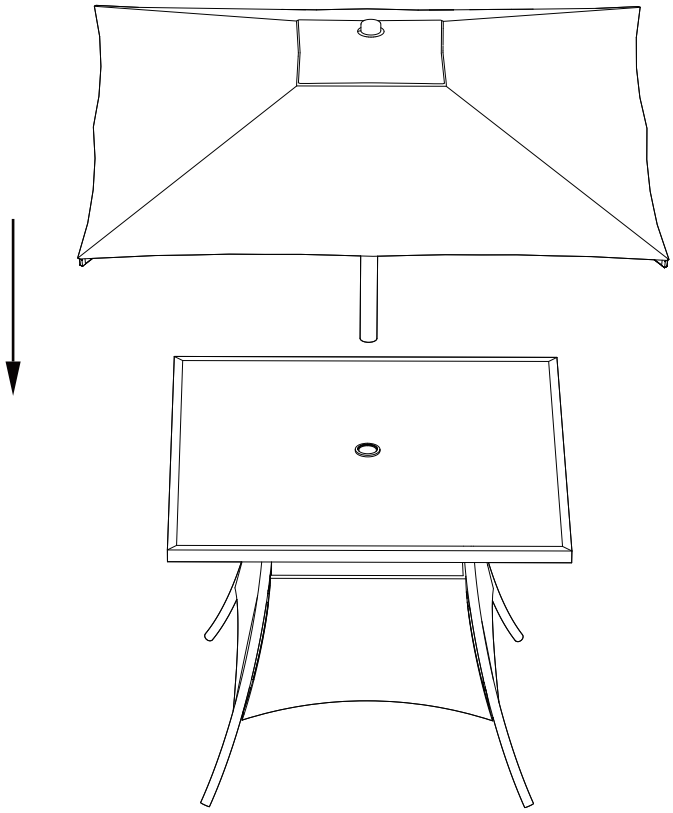

Step 9:Upside down two tables, use the snap(R) to snap the two tables tight.

Notice: Do not use tools such as hammers;You can scald it with boiling water to soften it.

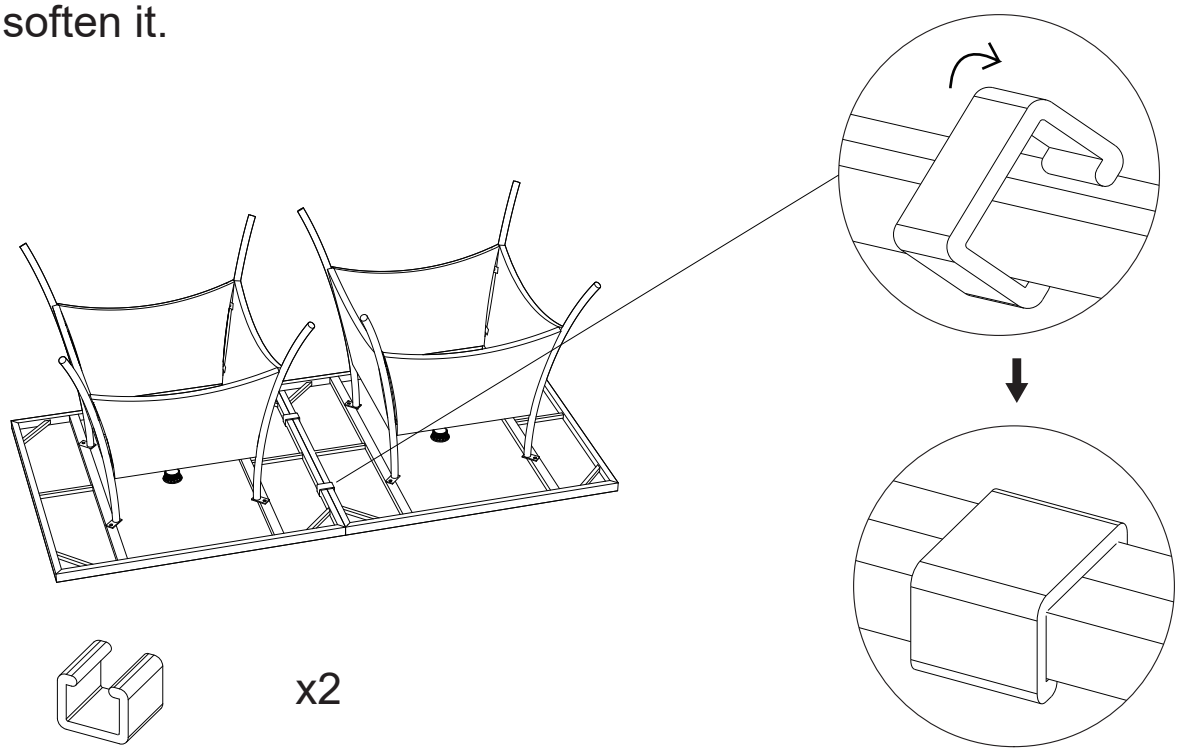

R x2

Step 10:Two sets of matching.

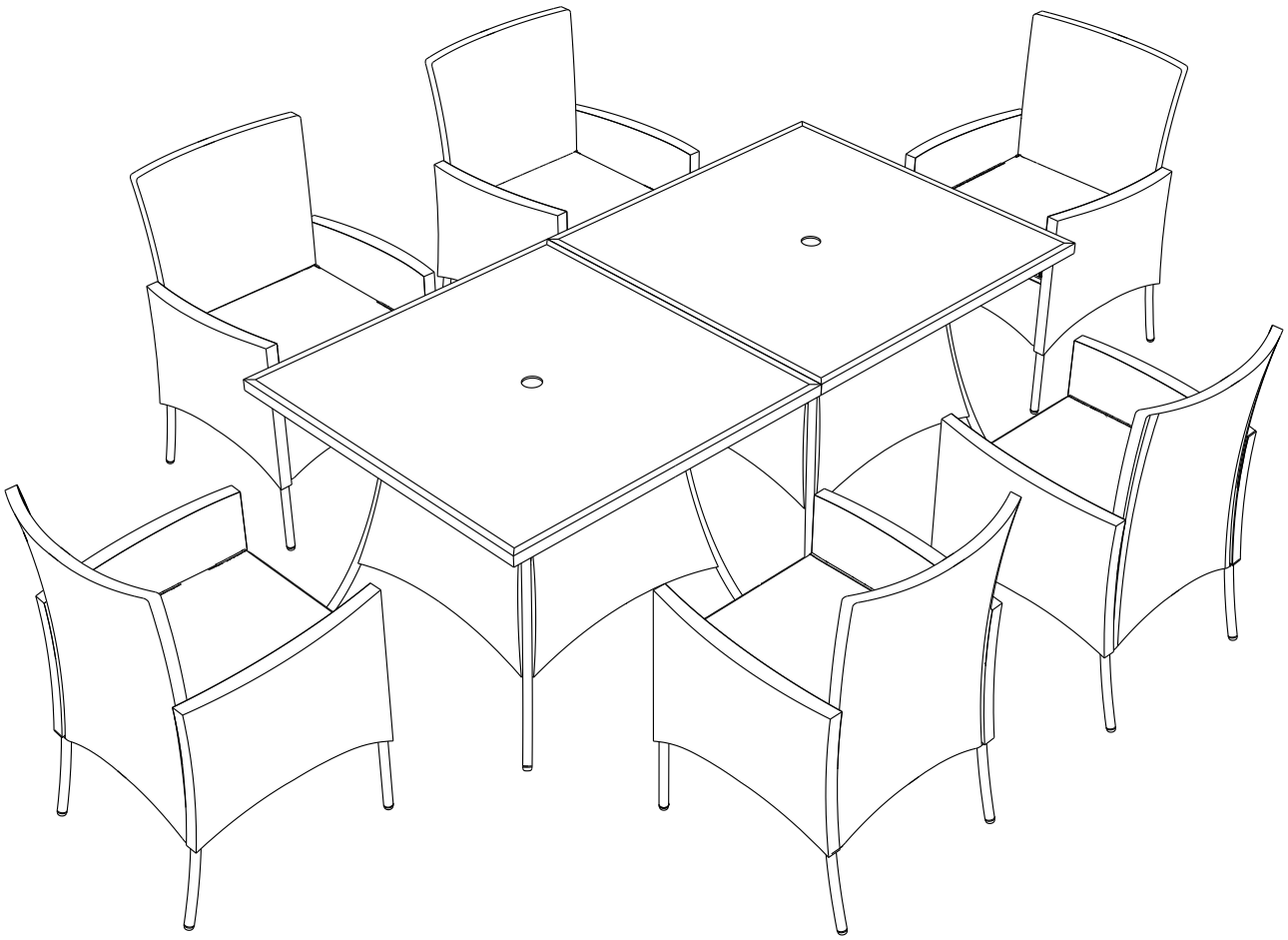

Step 11:Connect the chair front baffle(F) and the base plate(G) with screws(M).
NOTE:Do not tighten all screws now.

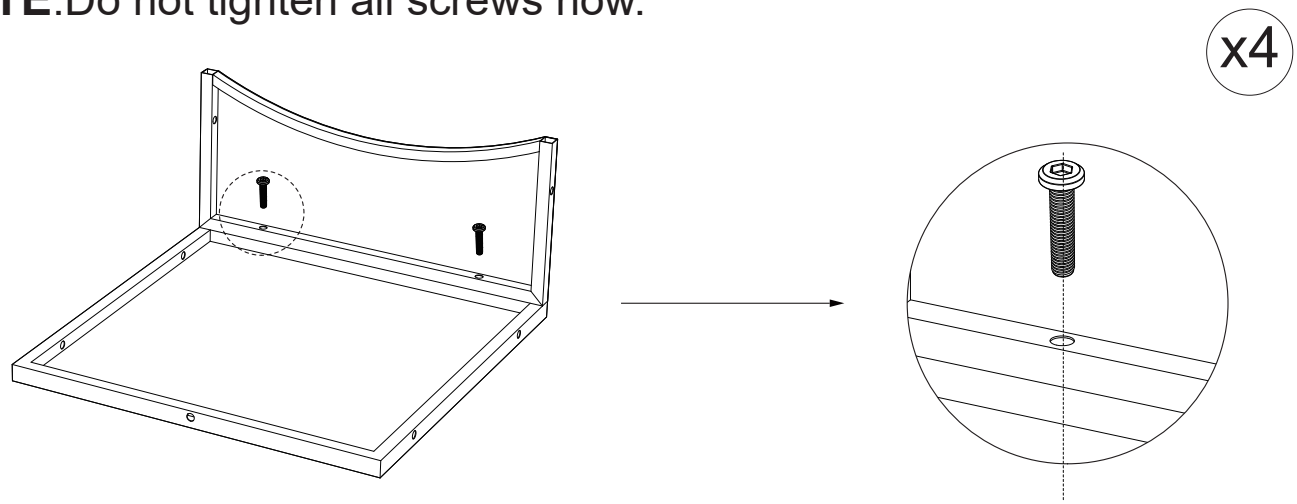

G 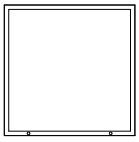 x4 F 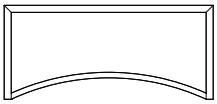 x4

M 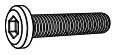 M6x30 x8

Step 12:Connect the chair base plate(G) and backrest(J) with screws(N).
NOTE:Do not tighten all screws now.

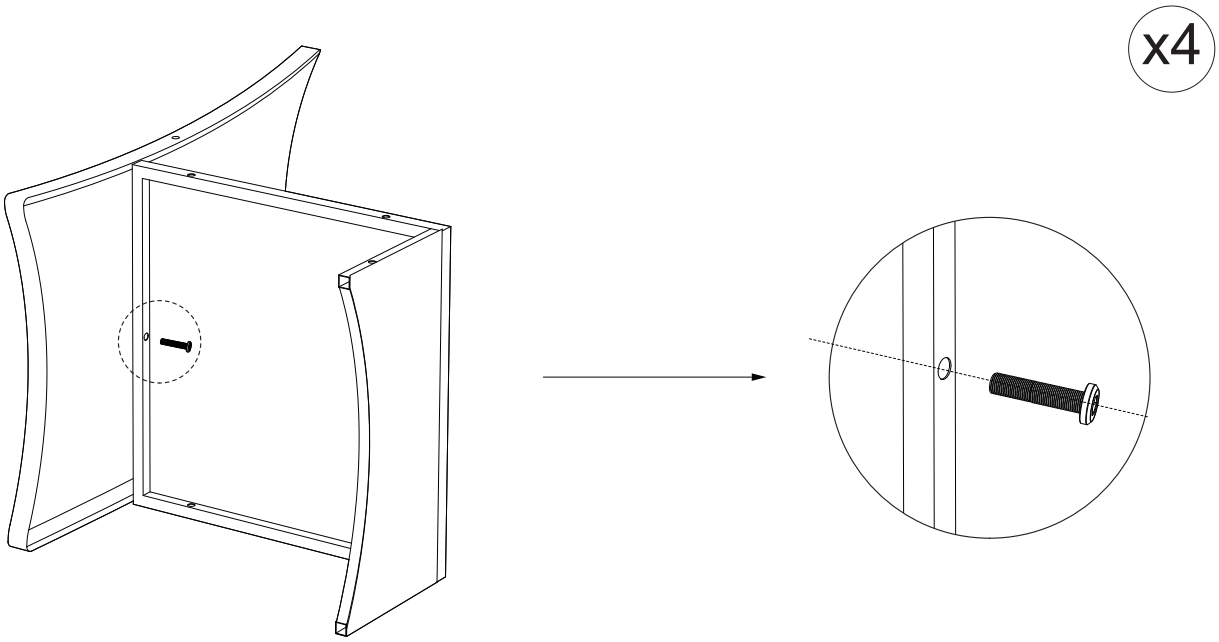

J 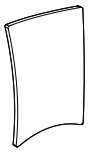 x4 N M6x35 x4

Step 13:Connect the bottom of the chair(G) and the left armrest(H) with screws(N).

NOTE:Do not tighten all screws now.

x4

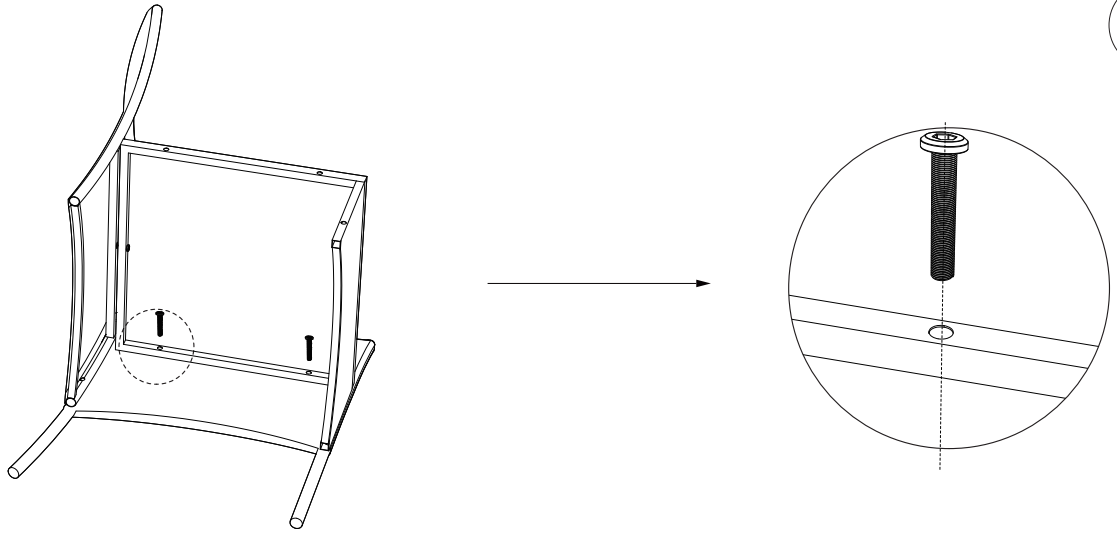

H 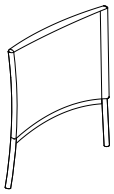 x4

N M6x35 x8

Step 14:Connect the backrest(J) and left armrest(H) with screws(N),and then connect the front baffle of the chair(F) and the left armrest(H) with screws(N).

NOTE:Do not tighten all screws now.

x4

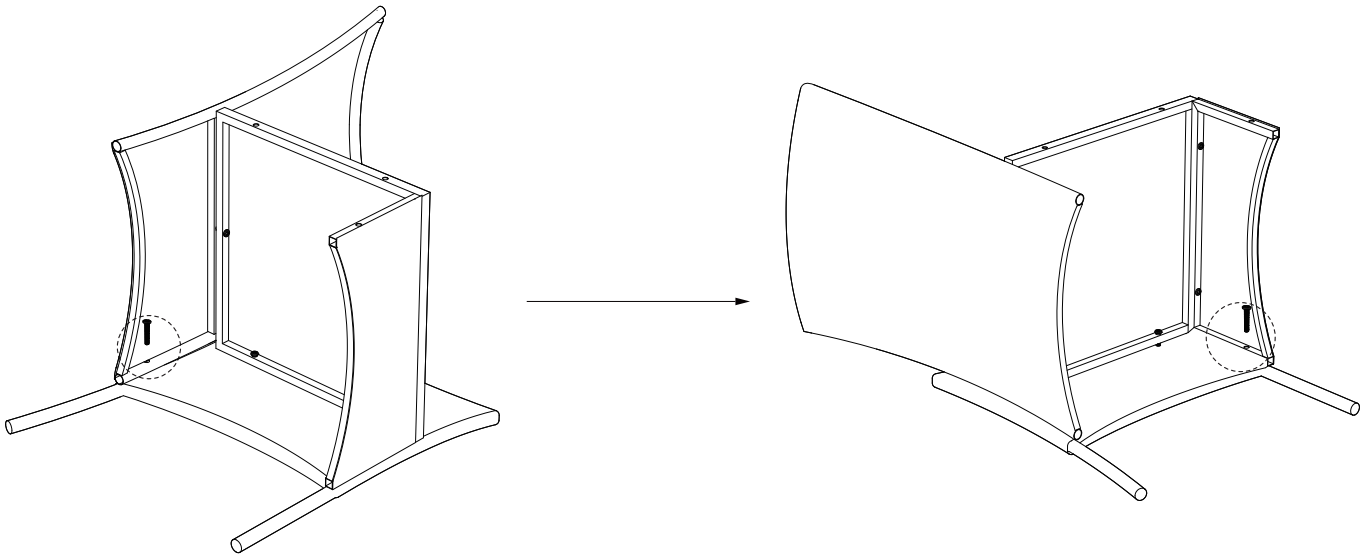

N M6x35 x8

Step 15:Connect the bottom of the chair(G) and the right armrest(I) with screws(N).

NOTE:Do not tighten all screws now.

x4

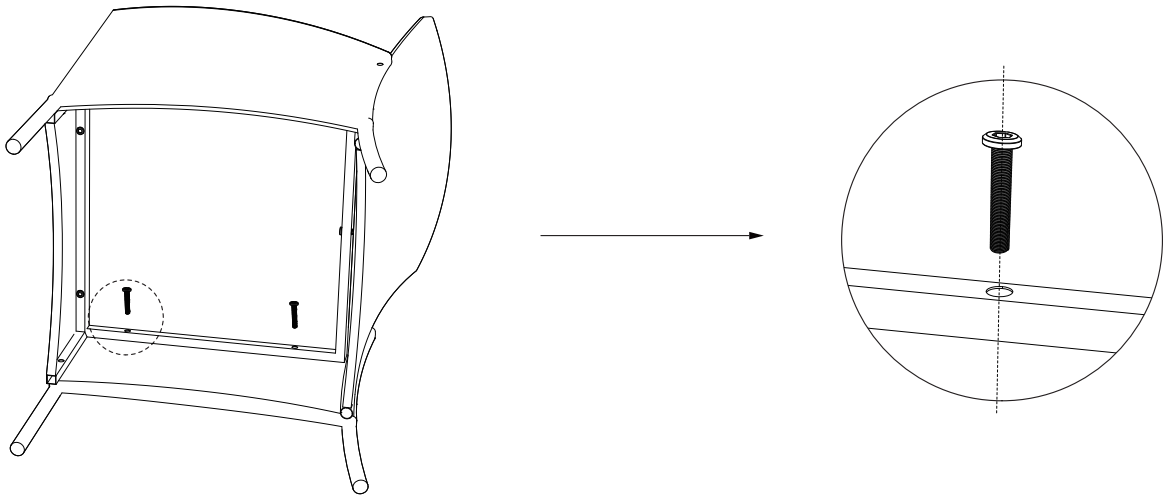

I 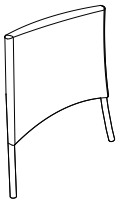 x4

N M6x35 x8

Step 16:Connect the front baffle of the chair(F) and the right armrest(I) with screws(N),and then connect the backrest(J) and right armrest(I) with screws(N).

NOTE:Do not tighten all screws now.

x4

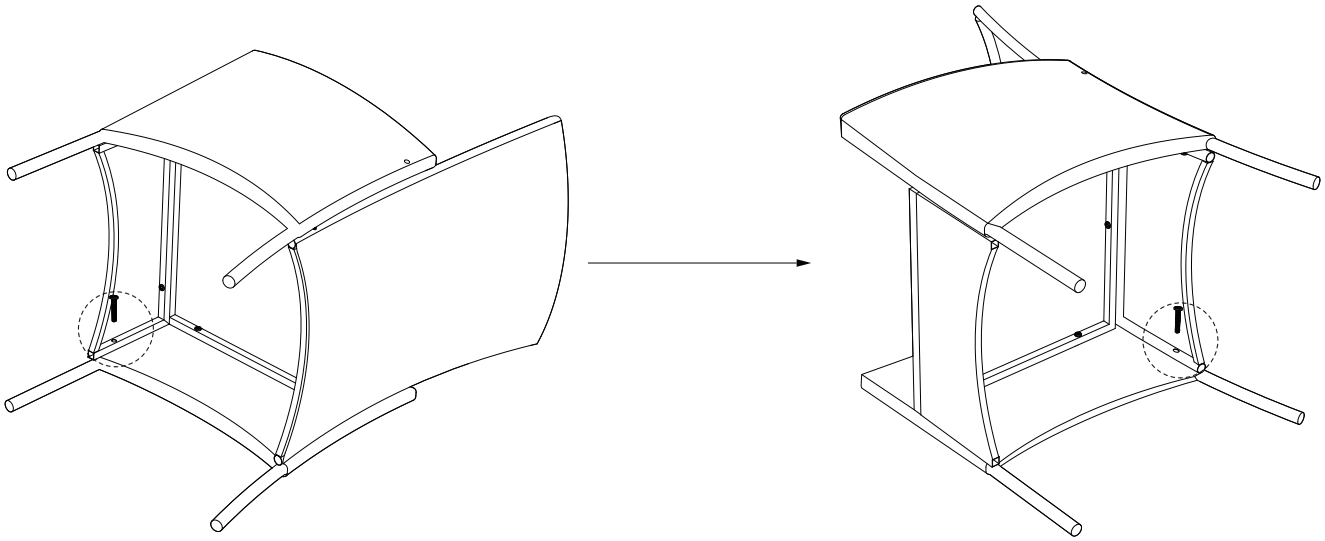

N M6x35 x8

Step 17:Connect the backrest(J) and the armrest(H and I) with screws (O).

NOTE:Please check all accessories are correct, then tighten all screws now.

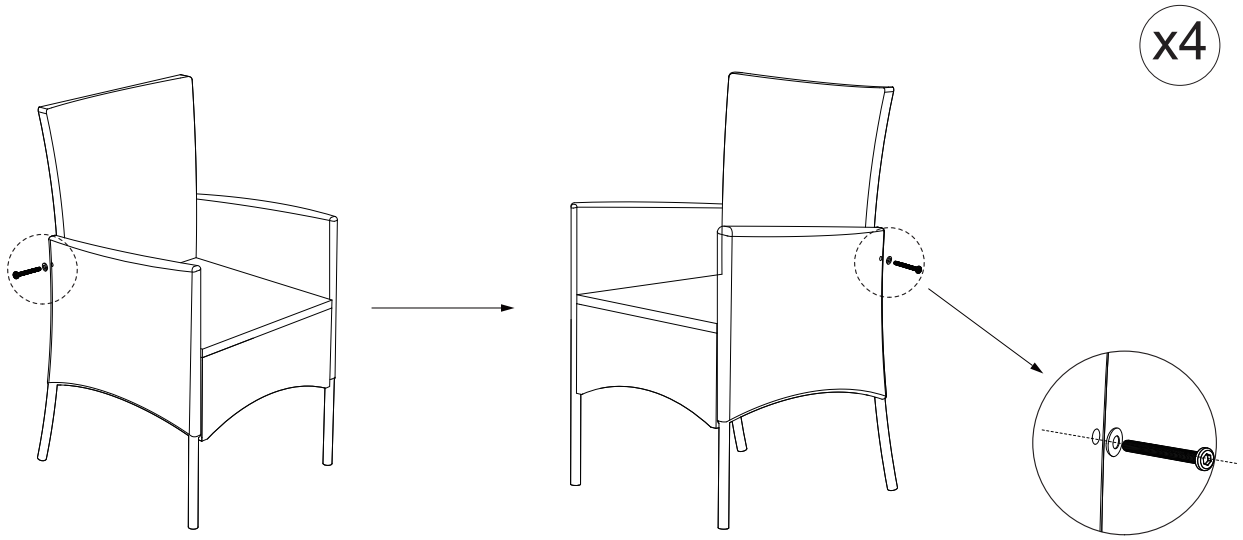

O M6x40 x8 V x8

Step 18:Attach the caps(T) to the screws(O).

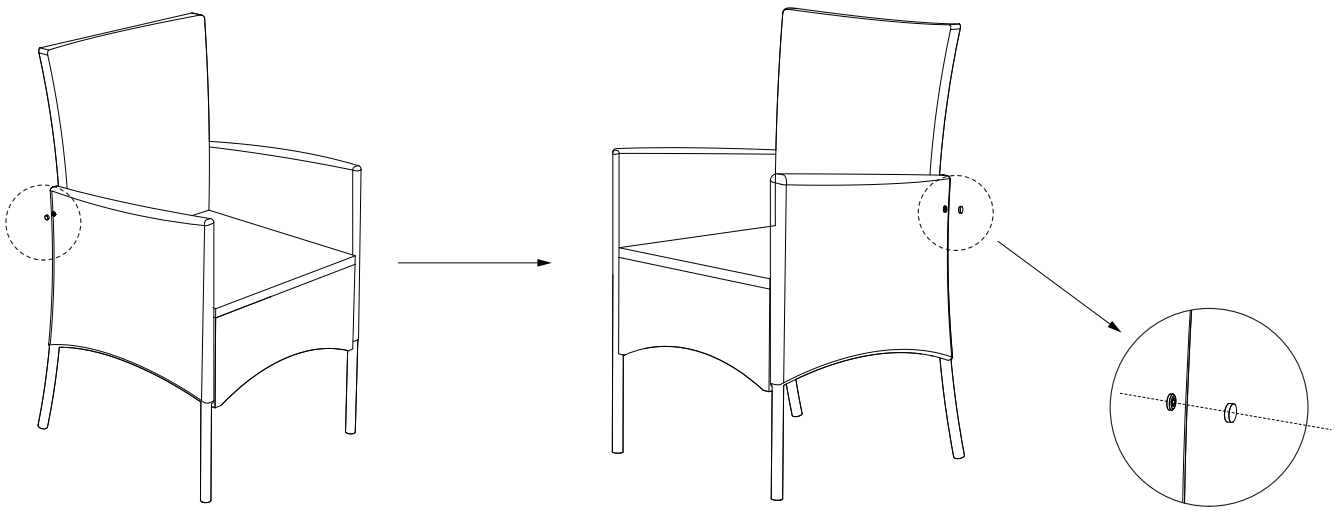

T x8

Step 19:Tighten the feet(U) into the chair leg tube and table leg tube.
NOTE:If the floor is not level, you can adjust the feet to match the level. If the feet fall off they can be rotated and tightened.

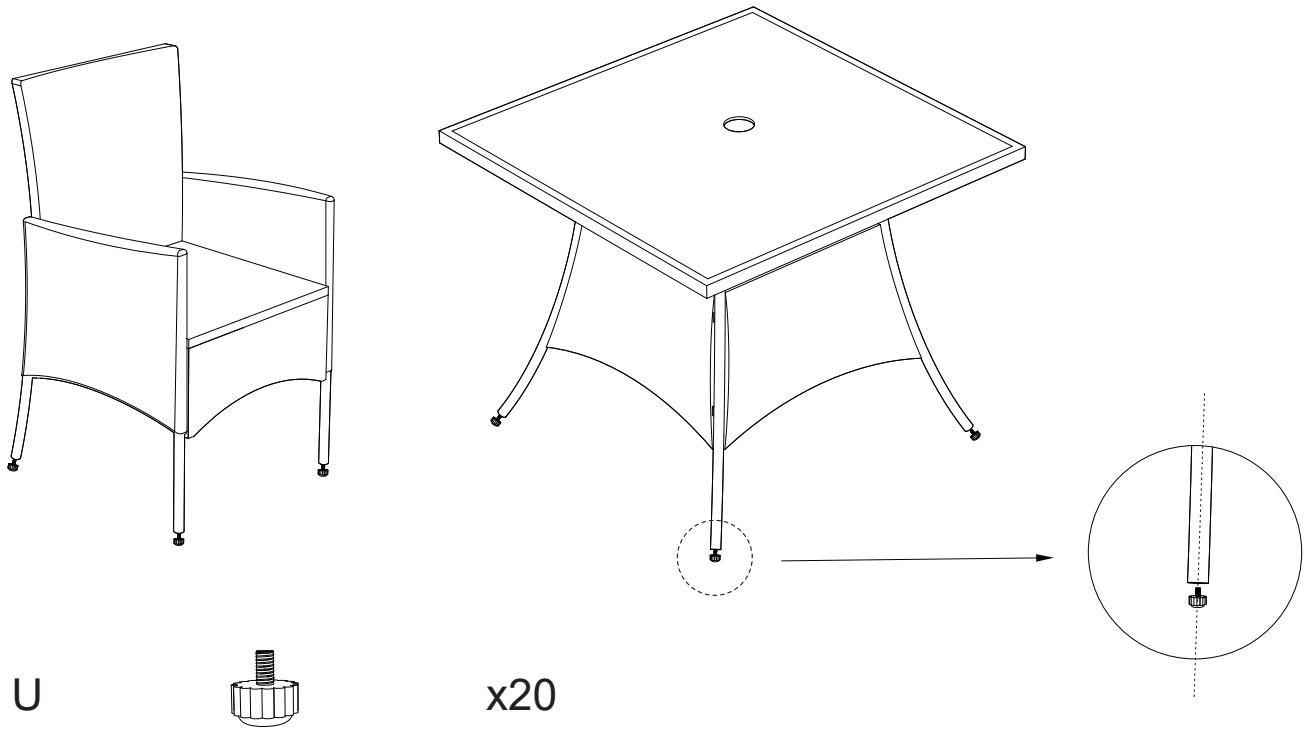

Step 20:Place the cushions(K) on the seat.

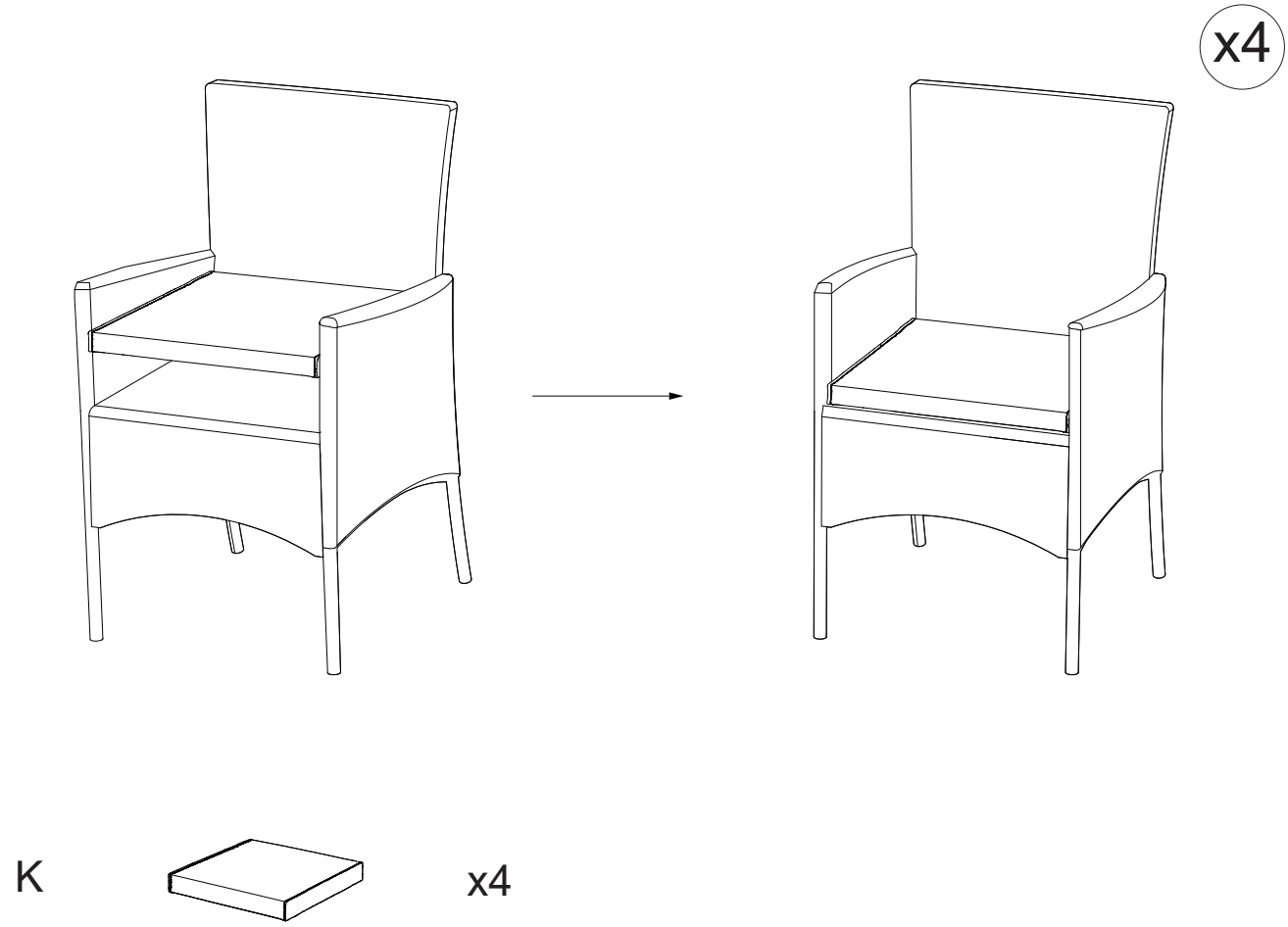

www.alaulm.com

Make your life much better.