Assembly and Operation Manual

Cantilever Umbrella

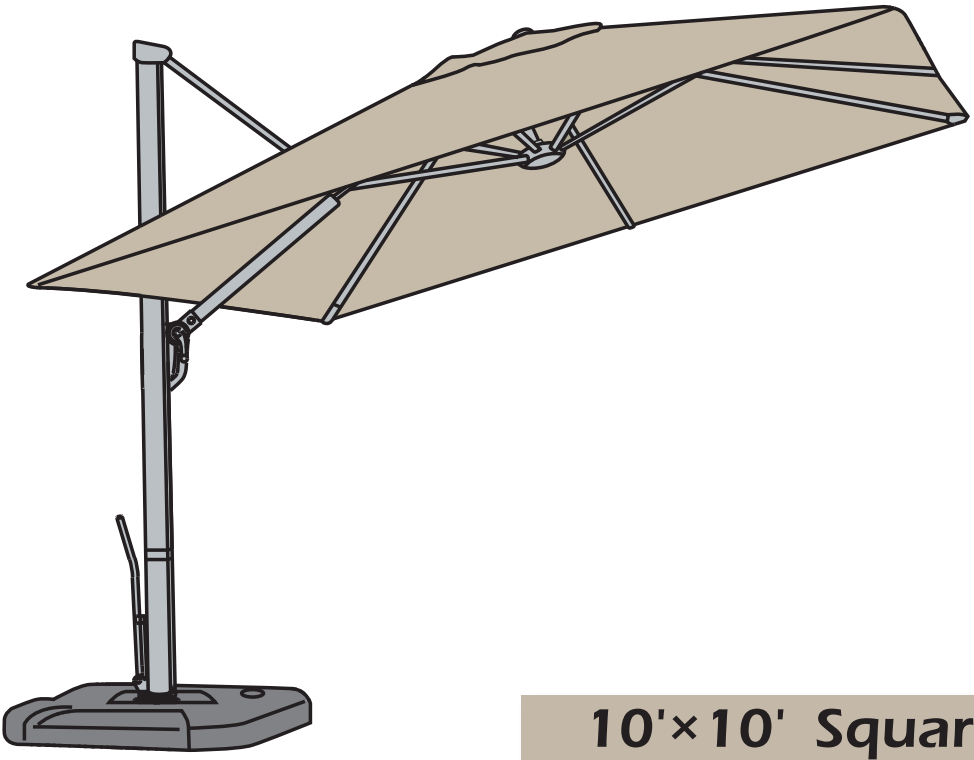

10'×10' Square

CHECK LIST

A ×1

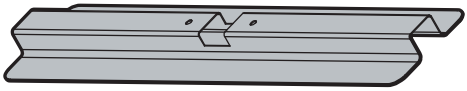

B ×1

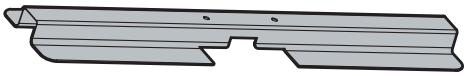

C ×1

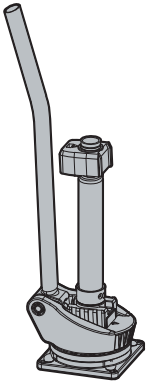

D ×1

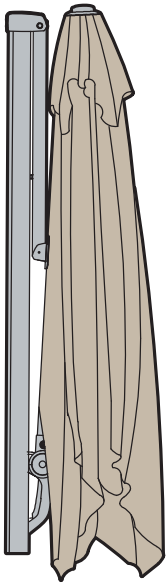

E ×1



F ×1

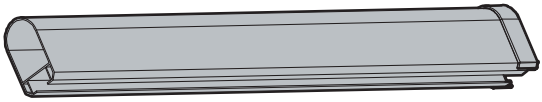

G×1



H×1

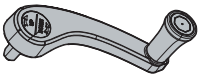

I×1

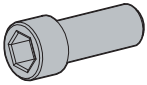

(M8×25)

J×4

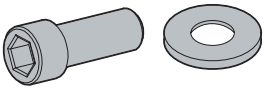

(M8×25) (M8)

K×1

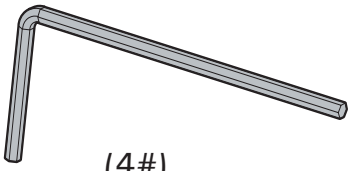

(4#)

L×1

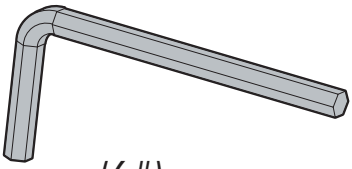

(6#)

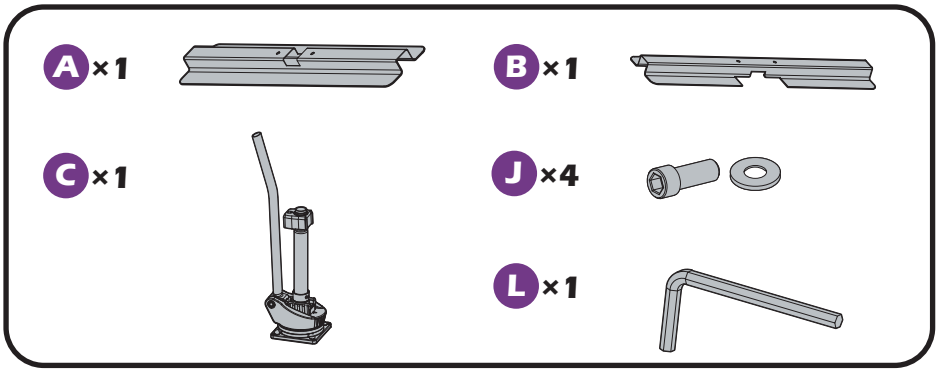
A ×1
B ×1
C ×1
J ×4
L ×1

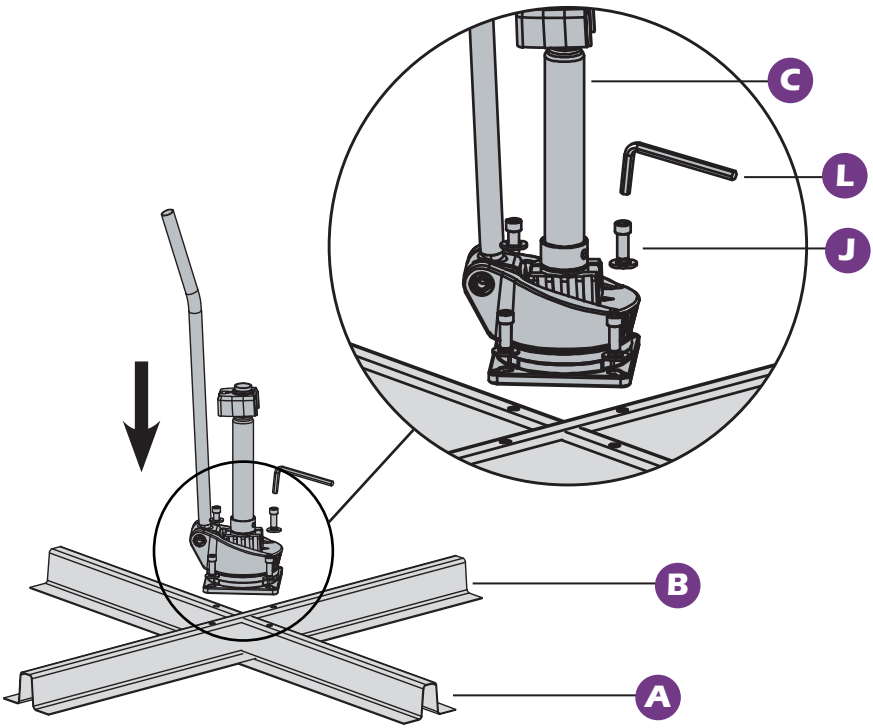
C
L
J
B
A


E×1
F×1

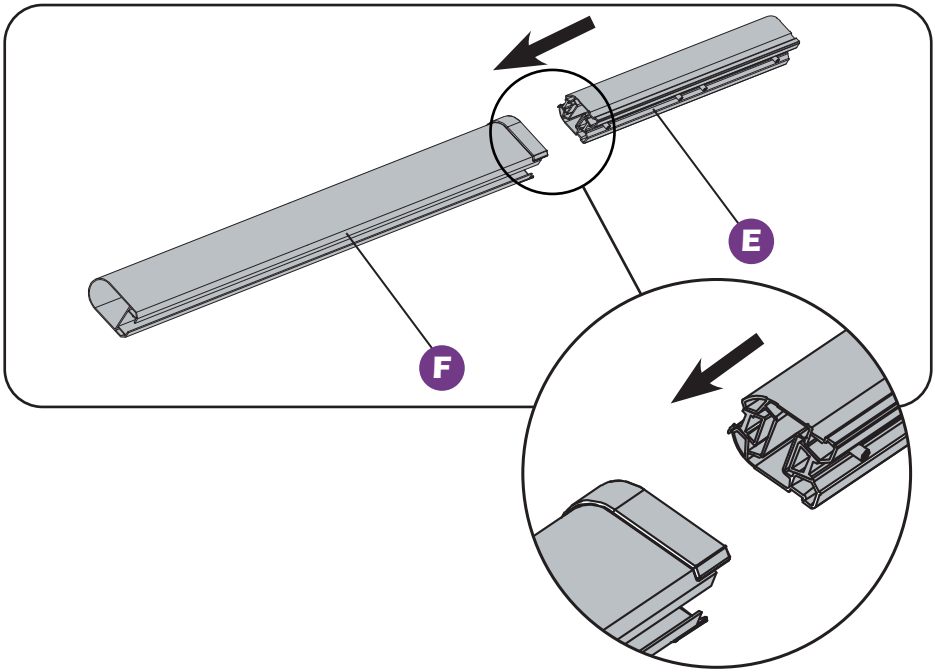
E
F

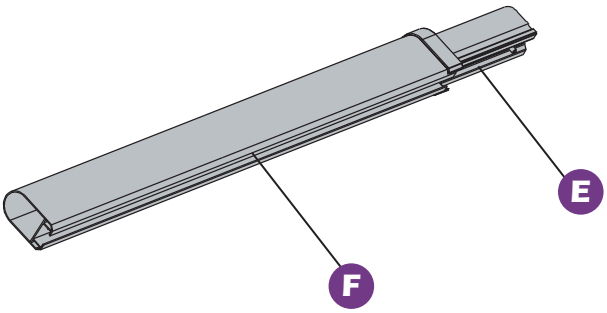
E
F

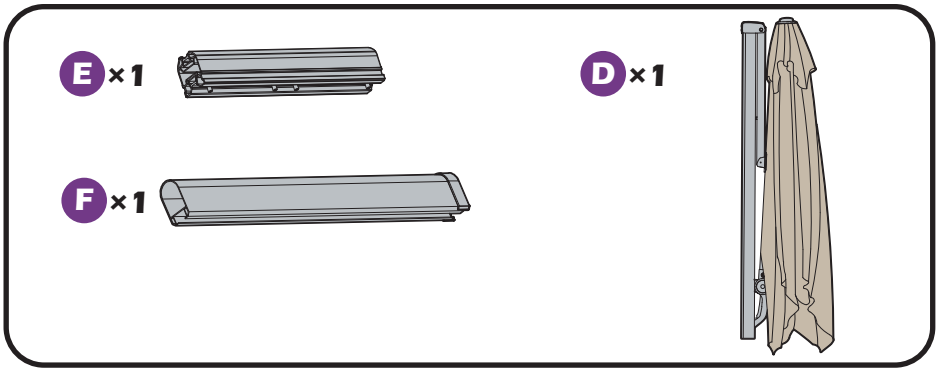

Press the trigger when sliding part E into part D.

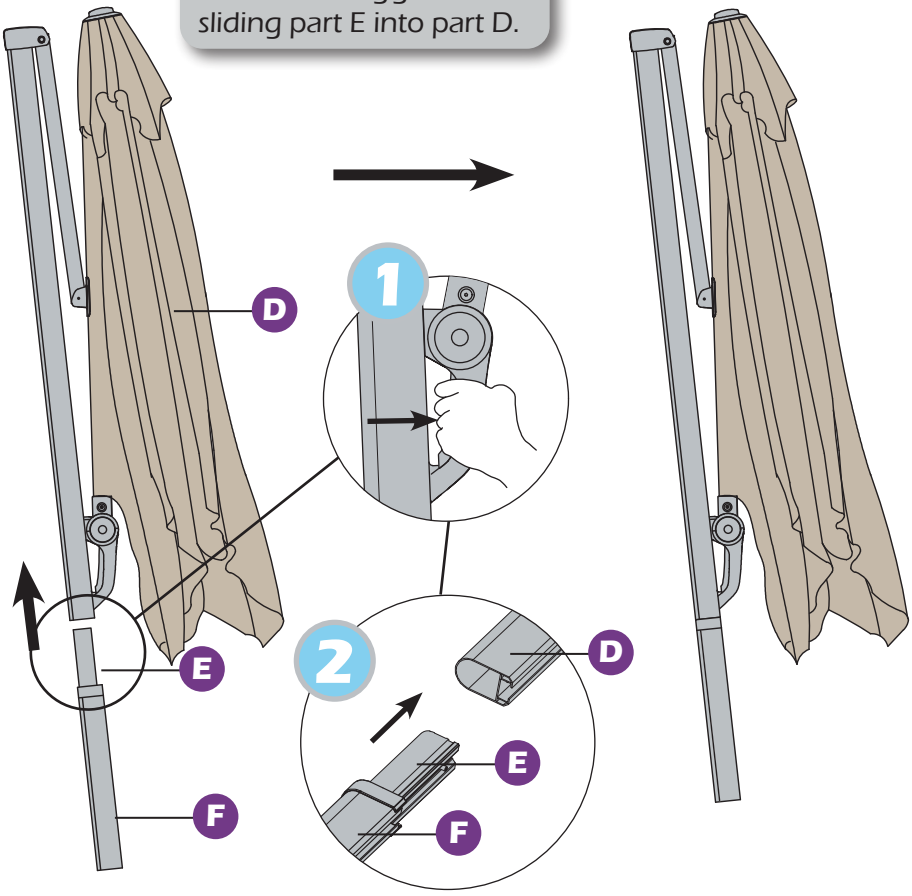

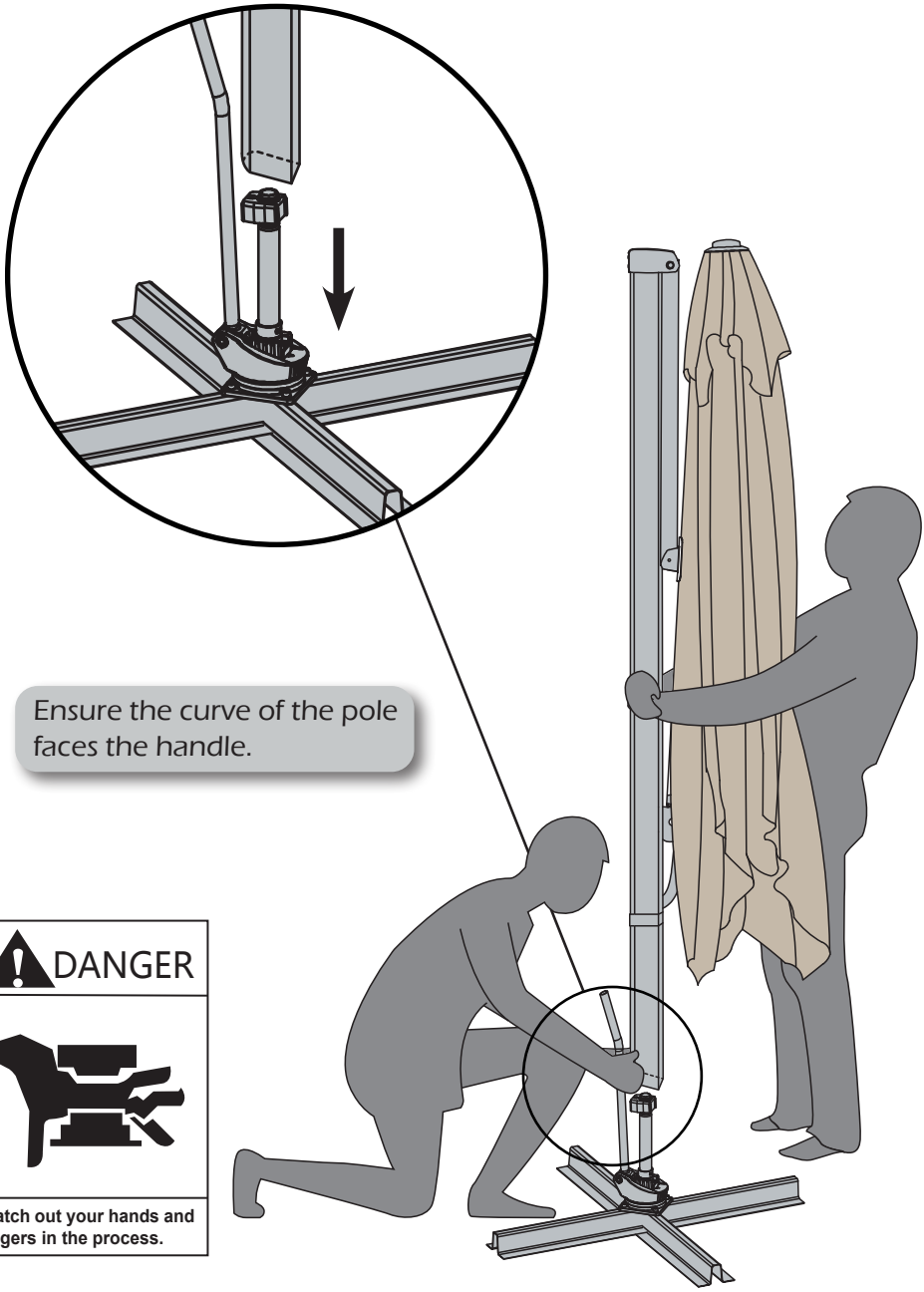

Ensure the curve of the pole faces the handle.

DANGER

Watch out your hands and fingers in the process.

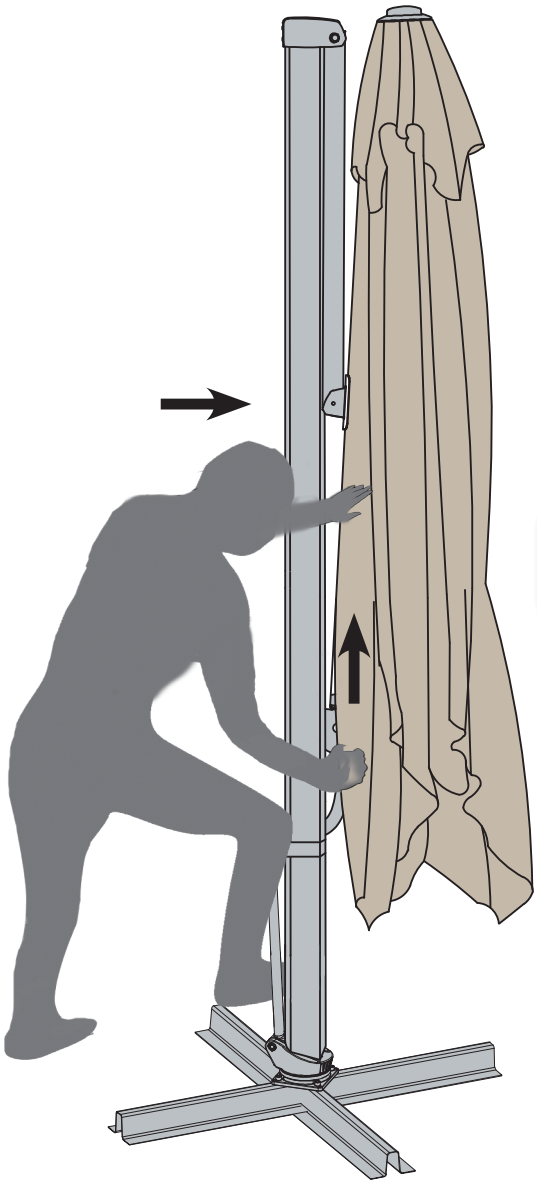

Pull the handle up while pushing the umbrella out.

K ×1

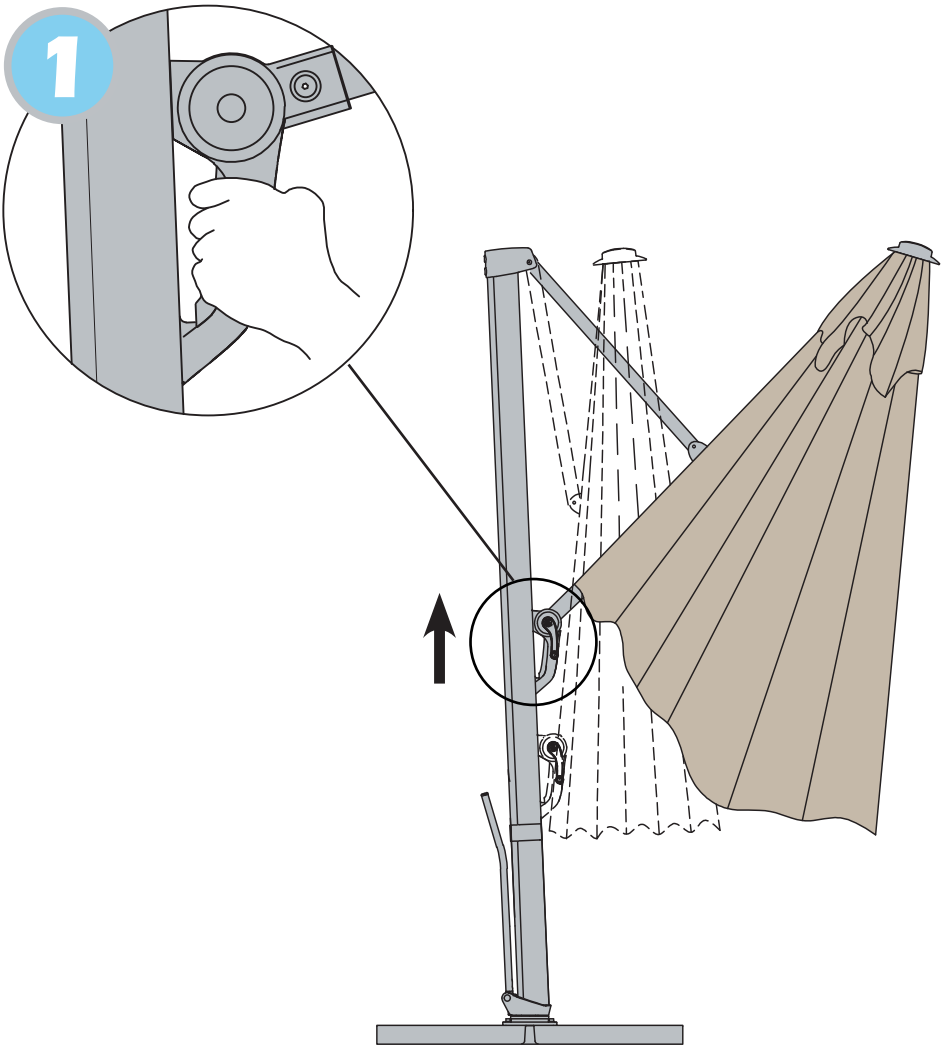

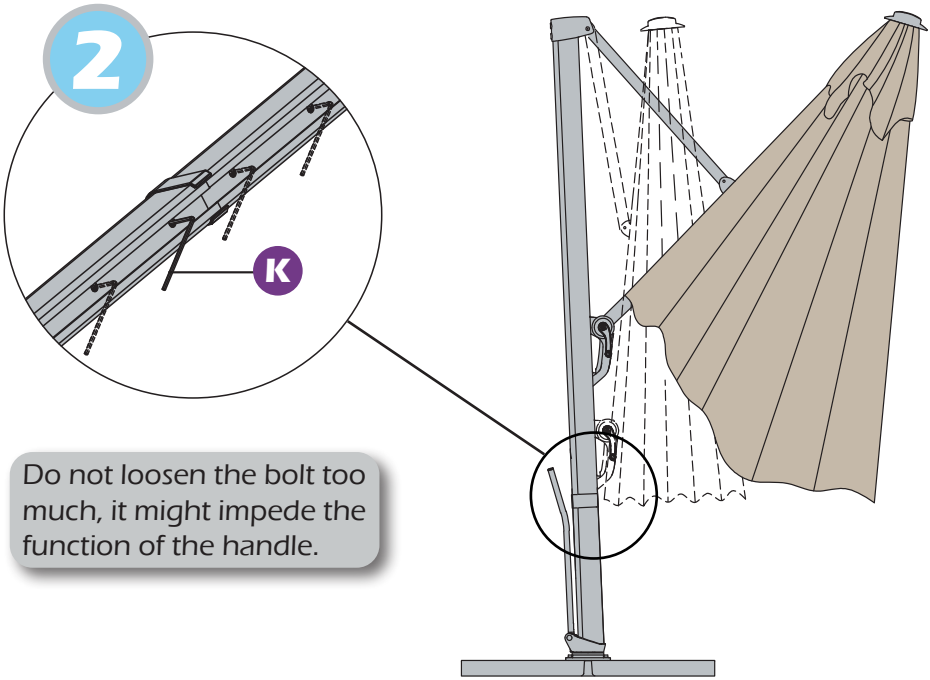

Do not loosen the bolt too much, it might impede the function of the handle.

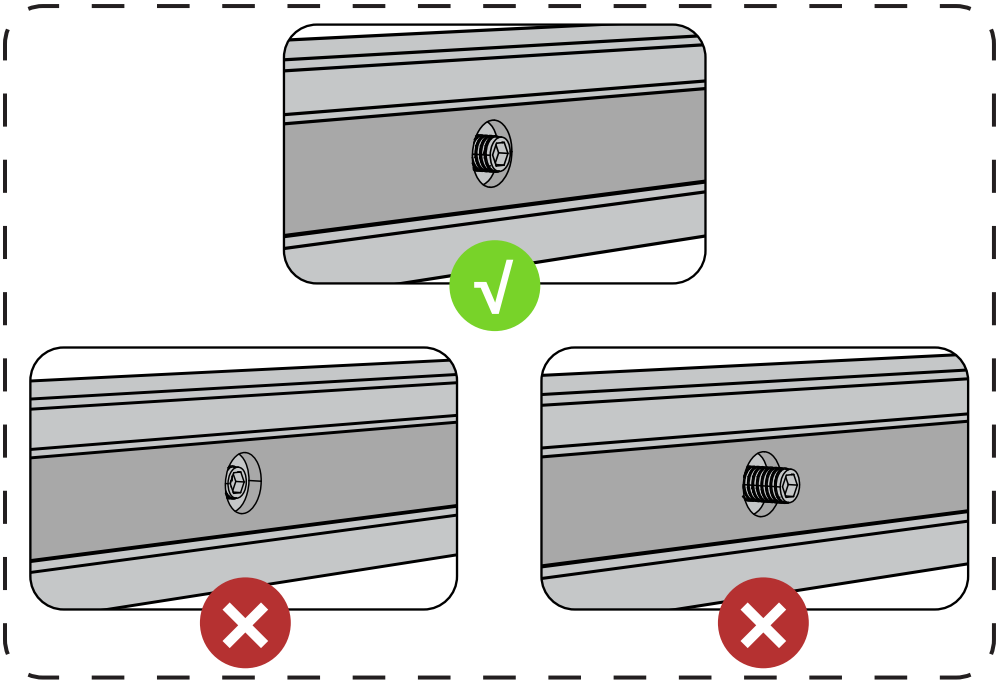

G ×1



I ×1

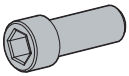

L ×1

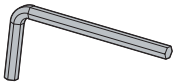

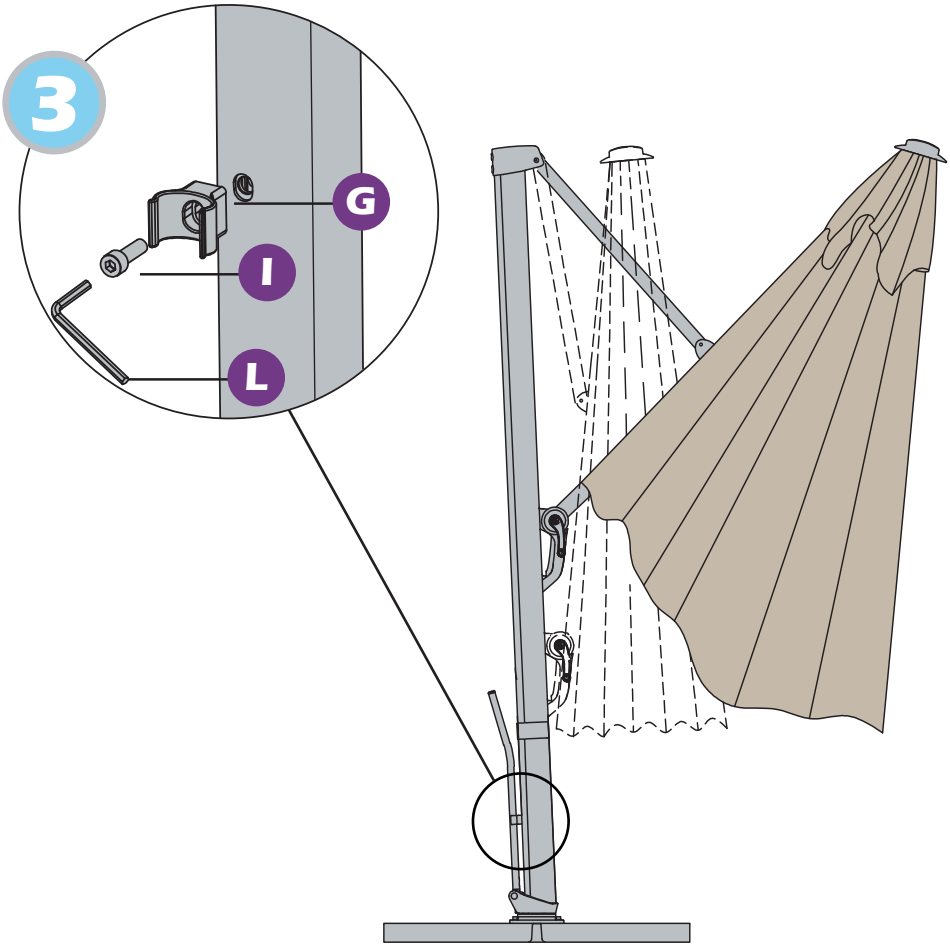

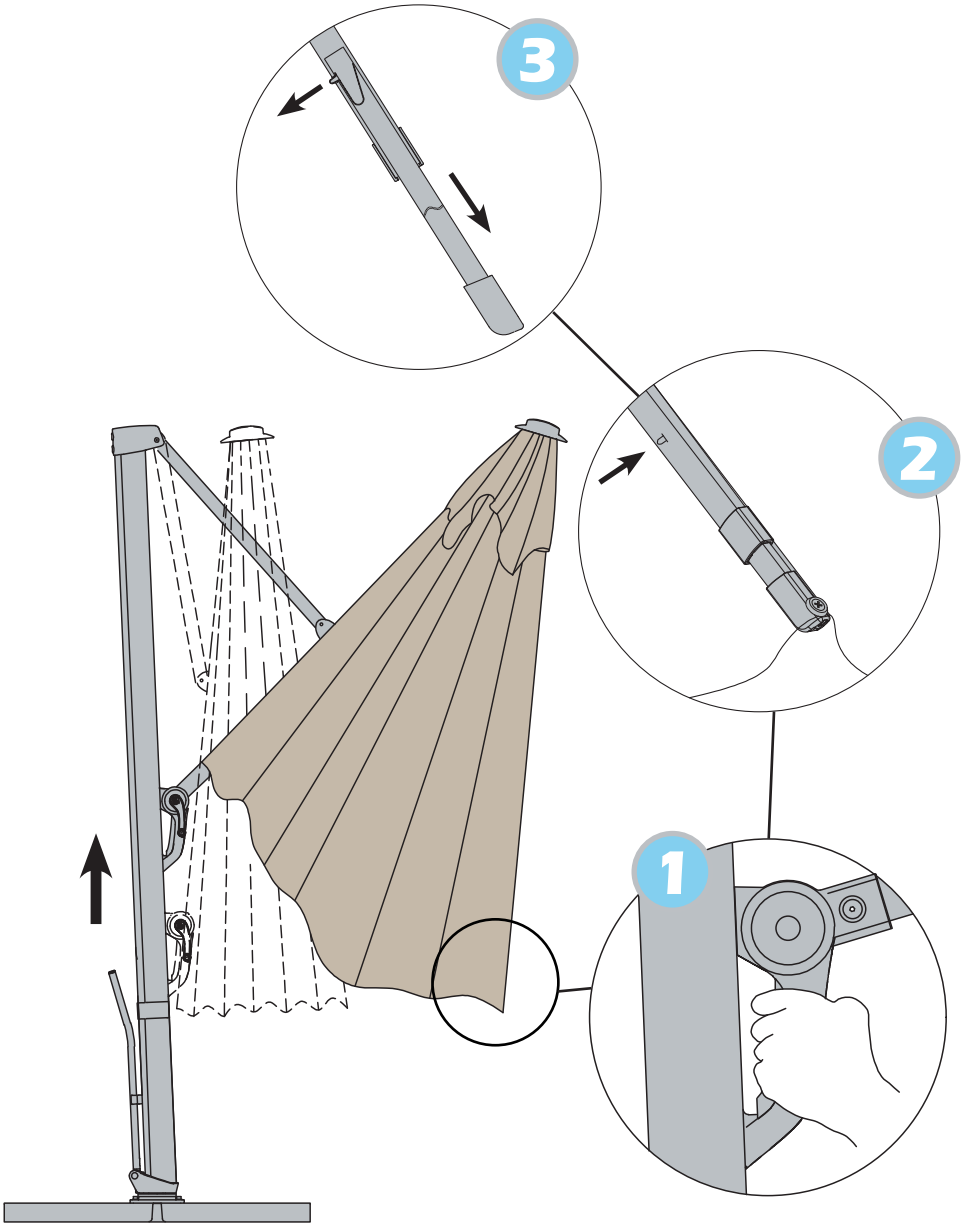
3
2
1

H ×1



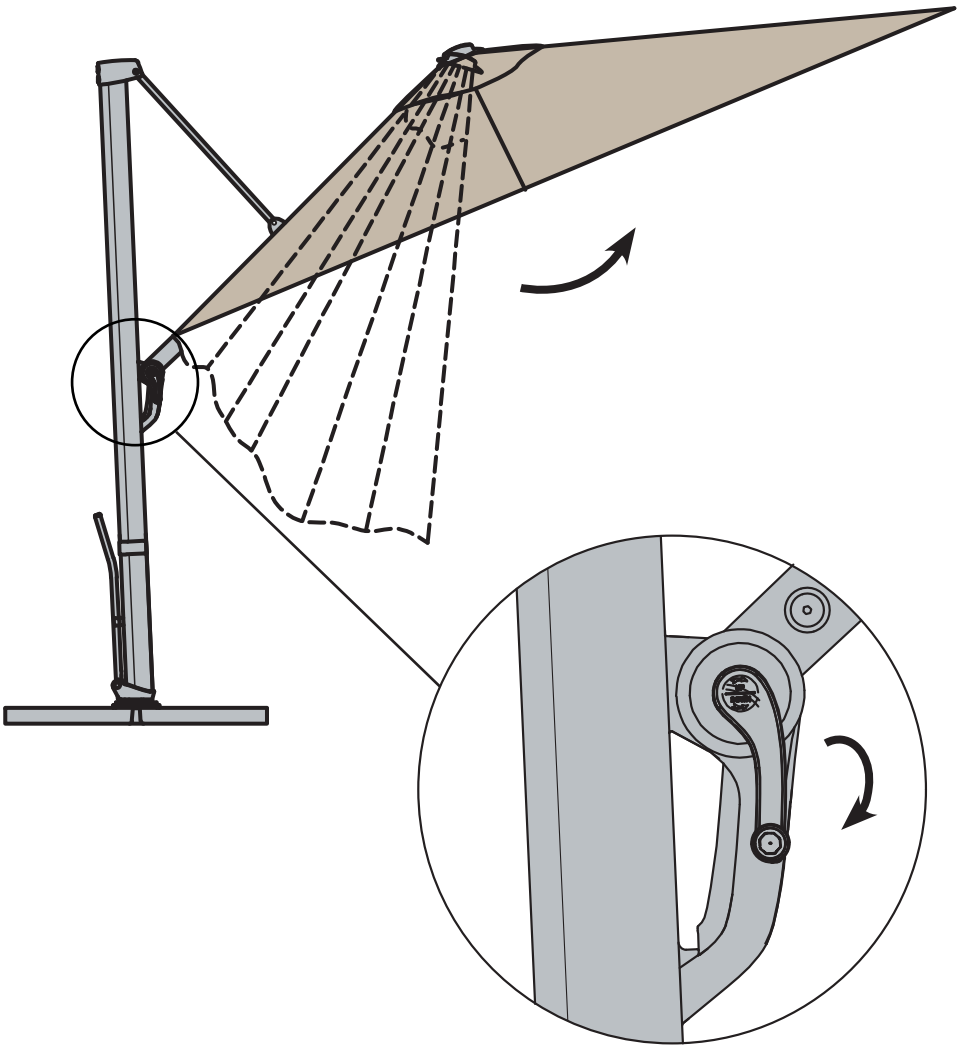

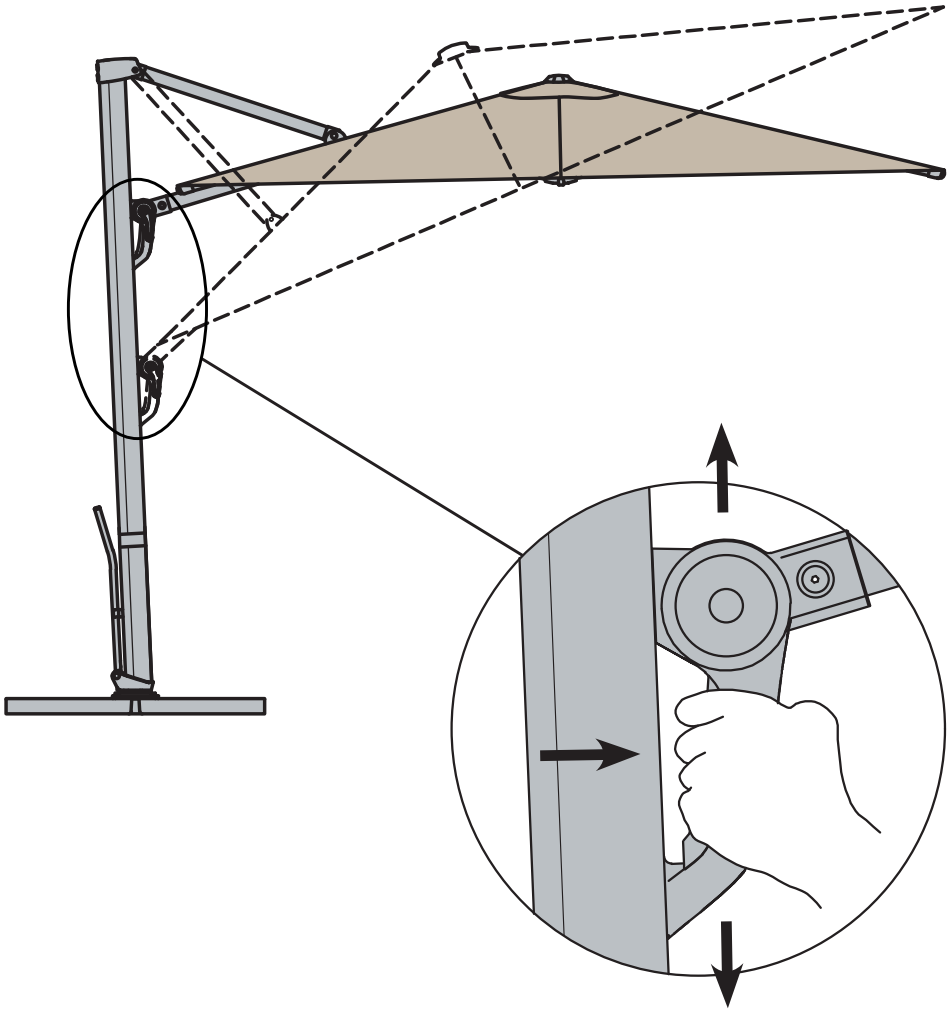

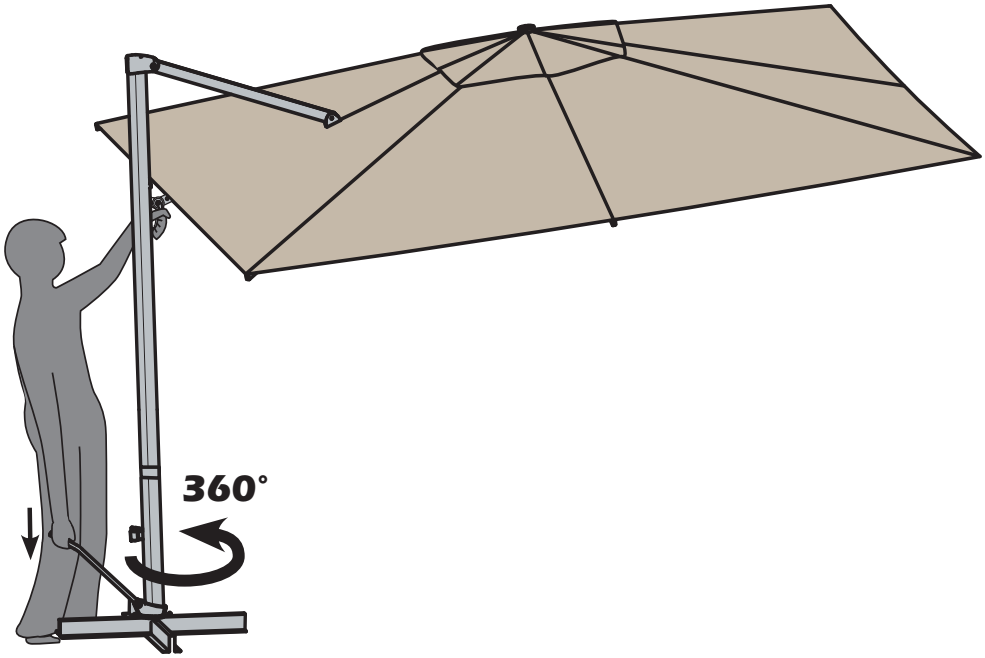

Pull the handle out for 360 degree rotation.

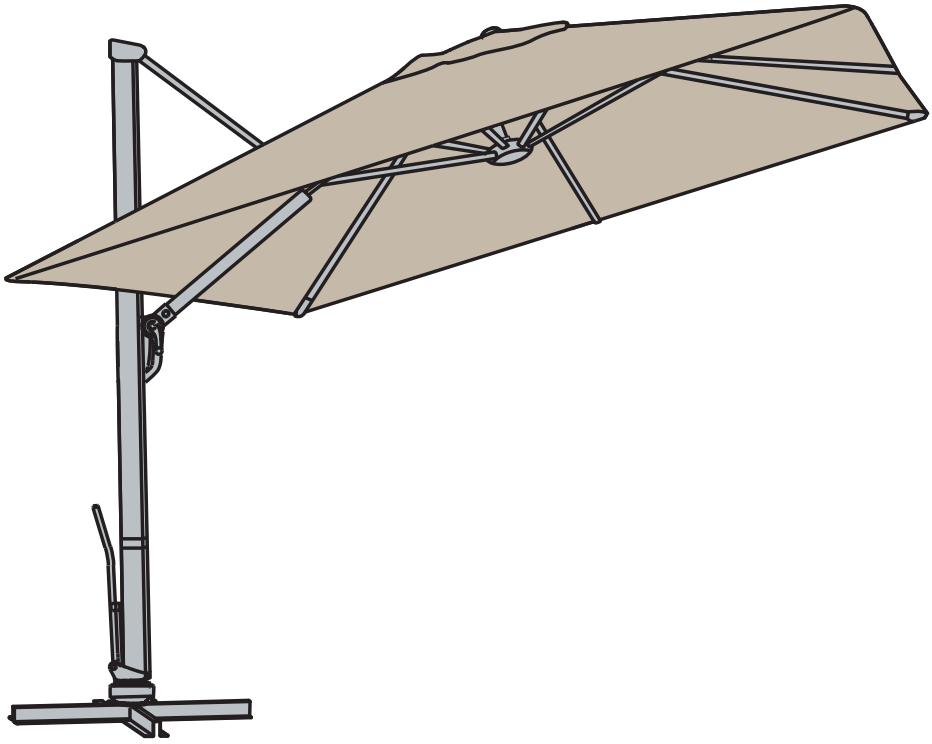

WARRANTY

Frame

Frames are warranted to be free from defects in materials and workmanship for a period of one year. Damage to frames or welds due to improper assembly or exposure to water and sub-freezing temperatures are not covered.

Fabric

Fabric is warranted for a period of three years. Fading or discoloration resulting from exposure to the elements, chemicals, or from spills is not covered.

Finish

The finish is warranted against peeling, cracking, or blistering for a period of one year, provided the unit has not been scratched or abraded. Scratches and chips resulting from abnormal wear and tear are not covered. Fading resulting from exposure to elements is not covered.

Note

All operations should be according to the instruction manual.

Exclusions

Failure caused by unreasonable or abusive use.
Failure caused by neglect of reasonable and necessary care.
Acts of nature (including but not limited to wind, hurricanes, tornadoes, and storms) are not covered by this warranty.

SAFETY PRECAUTIONS

Close the umbrella in windy conditions or when a storm approaches.

Never allow the umbrella to flap in the wind. This could damage the canopy.

Properly store umbrella when not in use. Close umbrella, and cover umbrella with a protective cover(not included).

Do not leave an open umbrella unattended. If damage occurs, this is not covered by the warranty.

When adjusting the umbrella, make sure that no person(s) or item(s) is close to the umbrella. This is important to prevent injury or material damage.

Care And Maintenance

When not in use, close and cover umbrella with a protective cover(sold separately).
If necessary, clean the fabric with lukewarm water.
Allow a wet canopy to dry slightly opened, but do not leave it unattended.
Wipe sliding marks on the aluminum poles with a damp cloth.
Winter Storage: Store in A Dry Place.

