ZEAFiVE®

SCAN ME PRODUCT INSTRUCTION VIDEO

SIZE DETAILS

Pedestal Bathroom Sink

All dimensions are nominal, minor variations may occur.

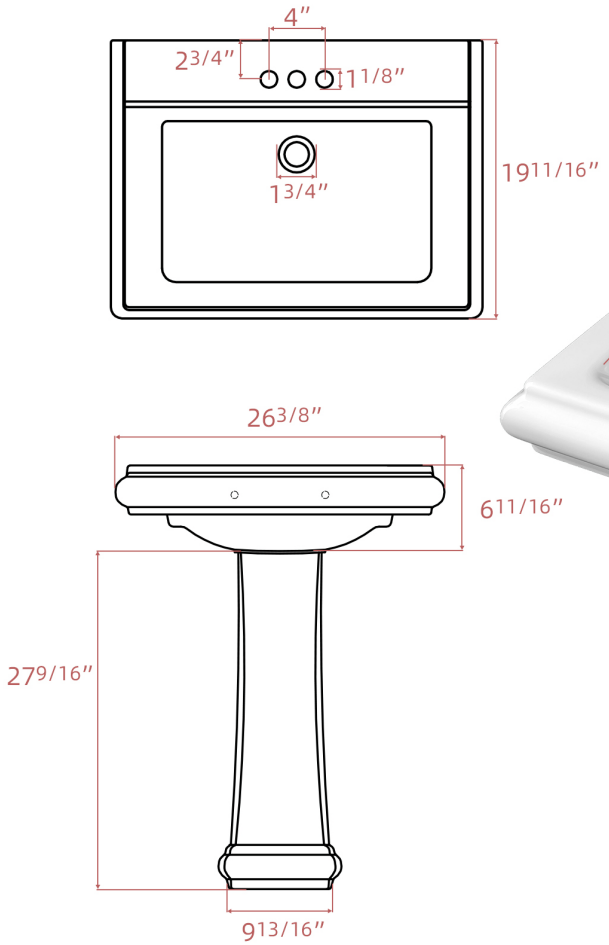



Email: service@bestgosupplychaininc.com