SKU# 1013882161 Model#AW08abulb1L-N
SKU# 1013882163 Model#AW08abulb1L-B

HAMPTON BAY®

USE AND CARE GUIDE

1-LIGHT INTERIOR WALL SCONCE

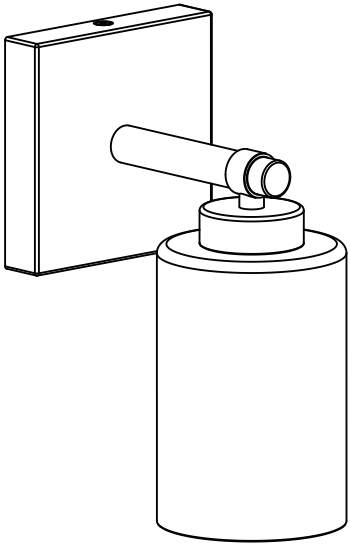

Questions, problems, missing parts? Before returning to the store,
call Hampton Bay Customer Service
8 a.m. - 7 p.m., EST, Monday – Friday, 9 a.m. – 6 p.m., EST, Saturday

1-855-HD-HAMPTON

HAMPTONBAY.COM

THANK YOU

We appreciate the trust and confidence you have placed in Hampton Bay through the purchase of this lighting fixture. We strive to continually create quality products designed to enhance your home. Visit us online to see our full line of products available for your home improvement needs. Thank you for choosing Hampton Bay!

Table of Contents

Table of Contents **2**
Safety Information **2**
Warranty **2**
What is covered 2
What is not covered 2
Pre-Installation **3**
Planning Installation 3
Tools Required 3
Hardware Included 3
Package Contents 4
Installation **4**
Care & Cleaning **6**
Troubleshooting **6**

Safety Information

WARNING: PRODUCT MUST BE INSTALLED BY A PERSON FAMILIAR WITH THE CONSTRUCTION AND OPERATION OF THE PRODUCT AND THE HAZARDS INVOLVED, IN ACCORDANCE WITH THE APPLICABLE INSTALLATION CODE.

Carefully read and understand the information given in this manual before beginning the assembly and installation. Failure to do so could lead to electric shock, fire or other injuries which could be hazardous or even fatal.

- □ Be sure the electricity to the wires you are working on is shut off. Either remove the fuse or turn off the circuit breaker.
- □ Changes or modifications not expressly approved by the party responsible for compliance could void the user's authority to operate the equipment.

WARNING: Risk of fire or electric shock. Lighting fixture installation requires knowledge of luminaire electrical systems. If not qualified, do not attempt installation. Contact a qualified electrician.

WARNING: To prevent wiring damage or abrasion, do not expose wiring to edges of sheet metal or other sharp objects.

NOTICE: Do not make or alter any open holes in an enclosure of wiring or electrical components during installation.

NOTICE: Handle glass shade with care due to potential breakage.

SUITABLE FOR DAMP LOCATIONS.

Warranty

WHAT IS COVERED

The manufacturer warrants this lighting fixture to be free from defects in materials and workmanship for a period of five (5) years from date of purchase. This warranty applies only to the original consumer purchaser and only to products used in normal use and service. If this product is found to be defective, the manufacturer's only obligation, and your exclusive remedy, is the repair or replacement of the product at the manufacturer's discretion, provided that the product has not been damaged through misuse, abuse, accident, modifications, alterations, neglect or mishandling.

WHAT IS NOT COVERED

This warranty shall not apply to any product that is found to have been improperly installed, set up, or used in any way not in accordance with the instructions supplied with the product. This warranty shall not apply to a failure of the product as a result of an accident, misuse, abuse, negligence, alteration, or faulty installation, or any other failure not relating to faulty material or workmanship. This warranty shall not apply to the finish on any portion of the product, such as surface and/or weathering, as this is considered normal wear and tear.

The manufacturer does not warrant and specially disclaims any warranty, whether express or implied, of fitness for a particular purpose, other than the warranty contained herein. The manufacturer specifically disclaims any liability and shall not be liable for any consequential or incidental loss or damage, including but not limited to any labor / expense costs involved in the replacement or repair of said product.

Contact the Customer Service Team at 1-855-HD-HAMPTON or visit www.HAMPTONBAY.com.

Pre-Installation

PLANNING INSTALLATION

WARNING: Shut off power at the circuit breaker or fuse panel before removing the old fixture.

Read all instructions before assembly. Before starting installation of this fixture or removal of a previous fixture, disconnect the power by turning off the circuit breaker or by removing the fuse at the fuse box. To avoid damaging this product, assemble it on a soft, non-abrasive surface such as carpet or cardboard.

NOTE: Keep your receipt and these instructions for proof of purchase.

TOOLS REQUIRED

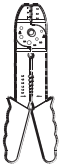
Wire Strippers


Safety Goggles

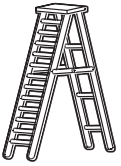
Ladder


Gloves


Phillips Screwdriver


Electrical Tape


Wire Cutters

HARDWARE INCLUDED

NOTE: Hardware not shown to actual size.


AA

Part	Description	Quantity
AA	Junction box screw	2

Pre-Installation (continued)

PACKAGE CONTENTS

Item	Part	Description	Quantity
Fixture Body (Parts A, B, C, D, E, and F are a group assembly)	A	Mounting plate	1
	B	Mounting screw	2
	C	Lanyard	1
	D	Wire connector	3
	E	Mounting deck	1
	F	Socket	1
Fixture Boby (Parts G and H are not assembled in the package)	G	Socket Ring	1
	H	Glass Shade	1

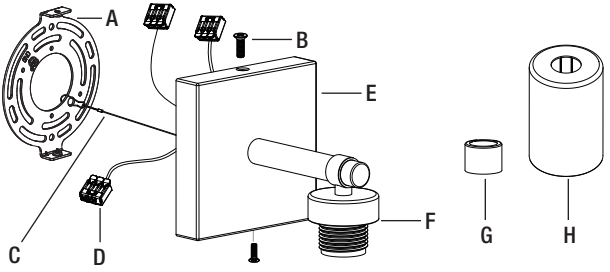

Installation

1 Loosen the Mounting Screws

□ Loose the two locked mounting screws (B) on the top and bottom of the mounting deck (E), and separate the fixture body and mounting plate (A)

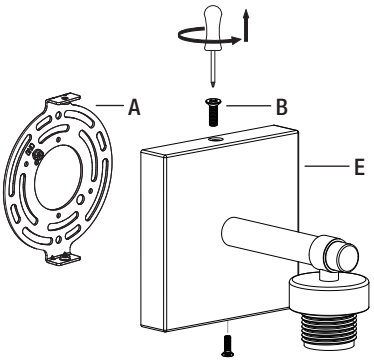

2 Mount the Mounting Plate

□ Put the mounting plate (A) onto the junction box (not included) and fix with junction box screws (AA).

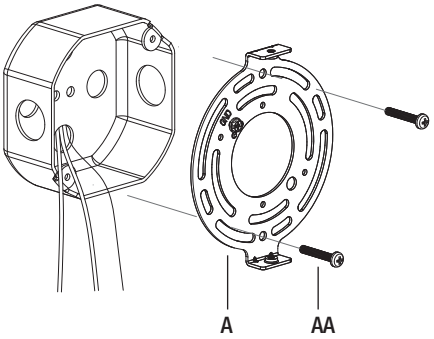

3 Connect the wires

- □ Lock the lanyard (C) to the mounting plate (A) to allow you to free your hands while connecting the wires.
- □ Insert the ground wire from the junction box into the connector that is connected to the ground wire from the fixture.
- □ Insert the white wire from the junction box into the connector that is connected to the white wire from the fixture.
- □ Insert the black wire from the junction box into the connector that is connected to the black wire from the fixture.
- □ Position the wires back inside the junction box.

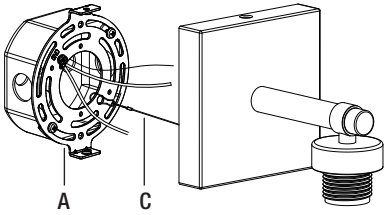

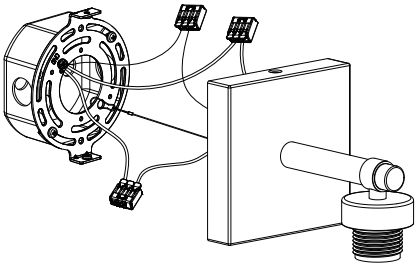

4 Mount the Fixture Body

- □ Attach the mounting deck (E) to the mounting plate (A), then tighten the mounting screws (B) by using a Phillips screwdriver (not included).

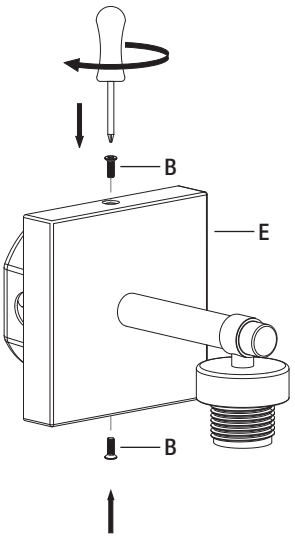

5 Install the Shade

- □ Place the glass shade (H) over the socket (F). Screw the socket ring (G) onto the socket (F) and make sure the glass shade (H) secured into place.

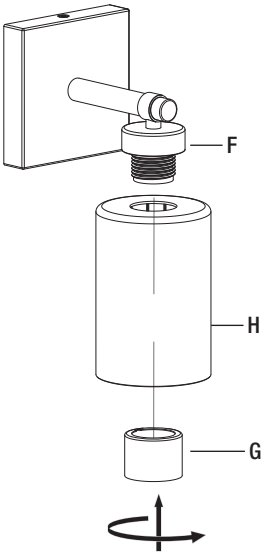

6 Turn on the Light

- □ Screw the bulb (not included) into the socket (F)
- □ Restore power to the junction box and turn on the light.

NOTE: Uses a 60W maximum medium base (E26) incandescent light bulb (or CFL or LED equivalent). Do not exceed the recommended wattage.

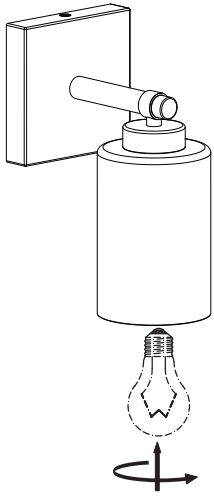

Care and Cleaning

- □ Clean the fixture with a soft, dry cloth.
- □ Do not use any cleaners with chemicals, solvents, or harsh abrasives.

WARNING: Shut off power at the circuit breaker or fuse panel before cleaning the fixture.

Troubleshooting

Problem	Possible Cause	Solution
The fixture will not light.	The power is off.	□ Ensure the power supply is On.
	The circuit breaker is off.	□ Ensure the circuit breaker is in the On position.
	A wire is not properly connected.	□ Check to ensure proper wire connections are made. Contact a qualified electrician.
	The switch is defective.	□ Test the switch or contact a qualified electrician to replace switch.
The fuse blows or the circuit breaker trips when the light is turned on.	The wires are crossed or the power wire is grounding out.	□ Check the wire connections. □ Contact a qualified electrician or call the Customer Service Team at 1-855-HD-HAMPTON

HAMPTON BAY®

Questions, problems, missing parts? Before returning to the store,
call Hampton Bay Customer Service
8 a.m. – 7 p.m., EST, Monday – Friday, 9 a.m. – 6 p.m., EST, Saturday

1-855-HD-HAMPTON

HAMPTONBAY.COM

Retain this manual for future use.