THANK YOU FOR PURCHASING OUR AVE • SIX

PACIFIC

Loveseat
PAC52

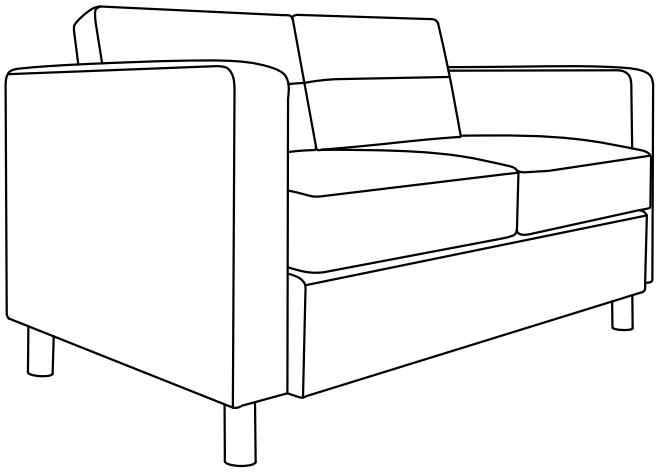

AVE • SIX
furnish your lifestyle

P.O. Box 3520, Ontario, CA 91761
Customer Service: 1-800-950-7262
www.avesix.com

LIMITED WARRANTY

Office Star Products warrants to the original purchaser that this product will be free from defects in material and workmanship as described below. Office Star Products will repair or replace, at its option, without charge to the original purchaser only, defective products or parts for one (1) year from the date of purchase. Replacement parts can only be supplied if parts are available. Items out of production may be unavailable. This warranty shall be effective for the applicable time period beginning from the date of purchase as shown on your original sales receipt. This warranty is your sole remedy for product defects and excludes defects due to or arising in connection with product abuse or misuse, use modification of, or attachments to the product, and products or parts not used, maintained, or installed in accordance with the company's installation, maintenance and/or applicable guidelines. There are no other warranties, express or implied, other than those specifically described, including without limitation any implied warranty of merchantability or of fitness for a particular purpose. Office Star Products will not be responsible for incidental or consequential damages. Some states do not allow the exclusion or limitation of incidental or consequential damages, so the above limitations or exclusions may not apply to you. This warranty gives you specific legal rights and you may also have other rights which may vary from state to state. Our quality standards are among the highest in the industry. Sometimes, no matter how hard we try, there are times when parts are damaged or missing. Our Parts Department will do everything possible to promptly remedy the problem. Contact us via e-mail **parts@officestar.net,** by Fax 1-909-930-5629, or toll free parts number 1-800-950-7262, Monday through Friday 8:00 a.m. - 5:00 p.m. Pacific Time.

OFFICE STAR® PRODUCTS

Assembly Instructions - Important:

Carefully unpack and identify each component before attempting to assemble. Refer to parts list. Please take care when assembling the unit and always set the parts on a clean, soft surface. If you require any assistance with assembly, parts or information on other products, please visit our website: www.avesix.com, email or write us.

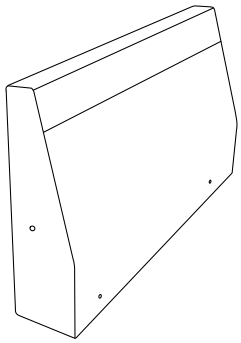

1 (Back) - 1 Piece

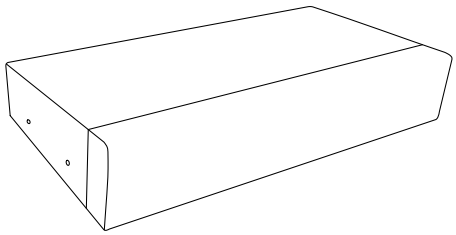

2 (Seat) - 1 Piece

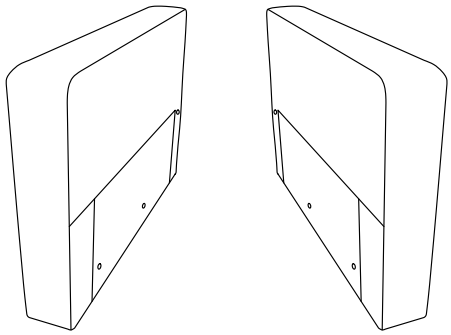

3 (Right Arm & Left Arm) - 2 Pieces

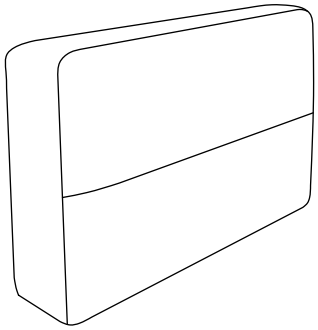

4 (Back Cushion) - 2 Pieces

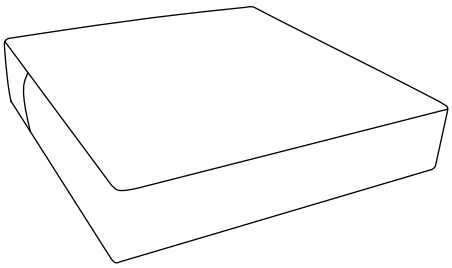

5 (Seat Cushion) - 2 Pieces

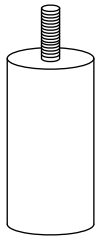

6 (Leg) - 4 Pieces

HARDWARE LIST

A	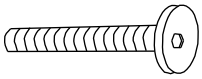	BOLT	8 PCS
B		LOCK WASHER	8 PCS
C	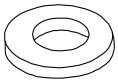	FLAT WASHER	8 PCS
D		ALLEN WRENCH	1 PC

Step 1

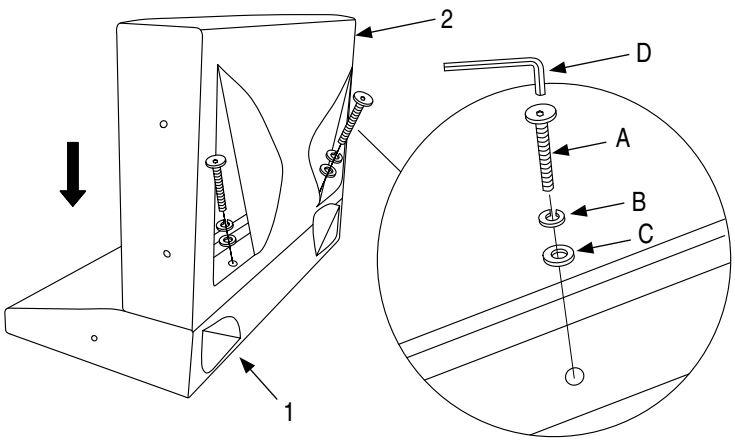

Step 2

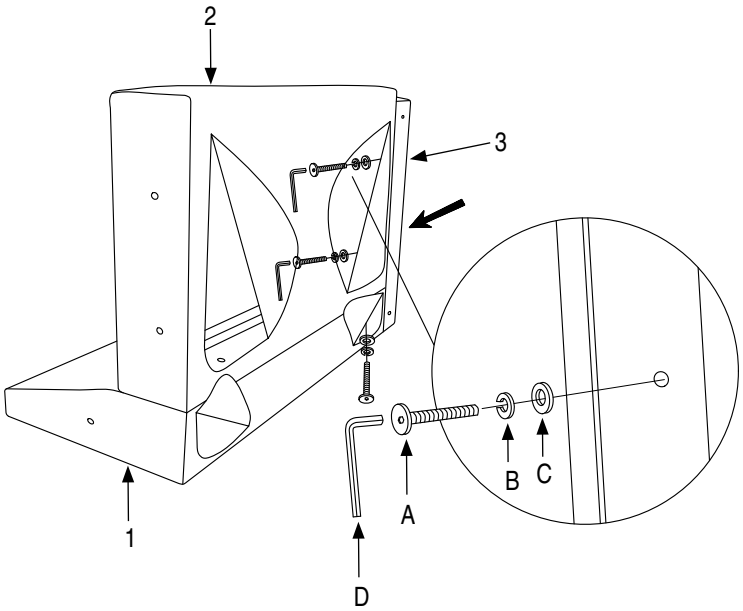

Step 3

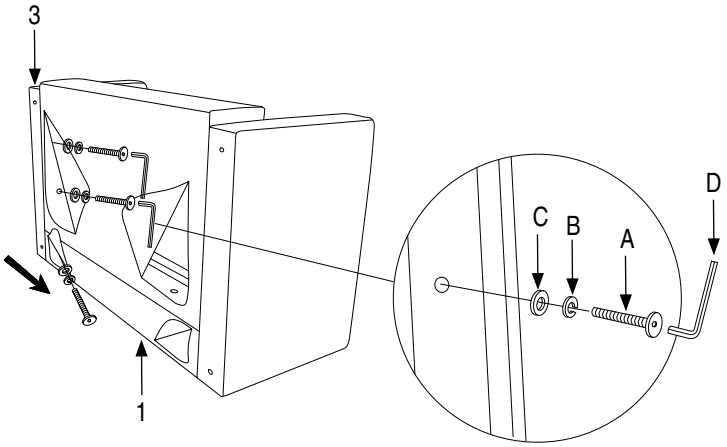

Step 4

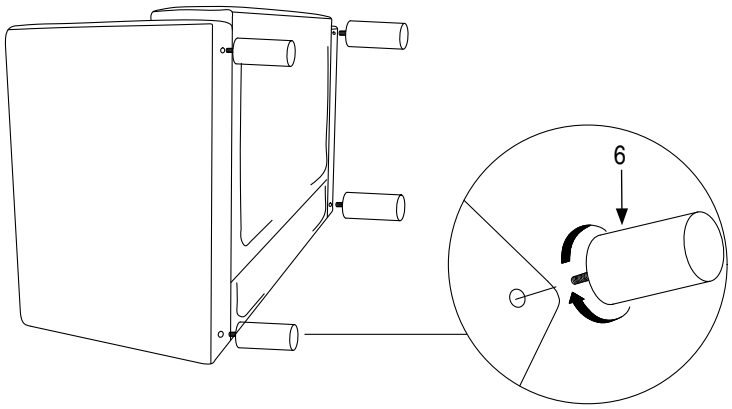

Step 5

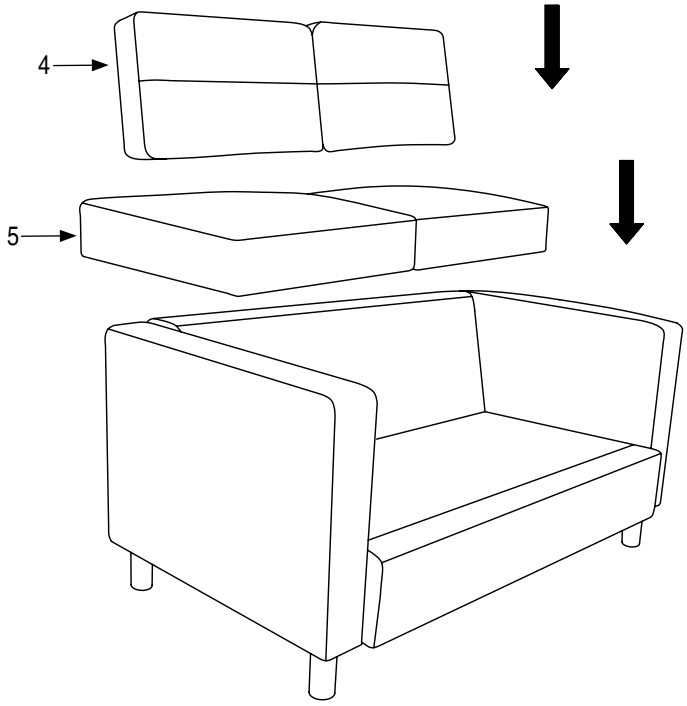

(This is a non printing page)

Office Star Products: Instructions Printing Rules

The following must be followed:

1. No changes should be made to these documents. If changes are needed they must be made through Office Star Products.

2. All items will be printed at the size intended by Office Star Products. Finish trim size is 81/2” X 11”

3. All Items will be printed on a printing press unless other arrangements are made before printing.

4. Paper should be white, at least 80# gloss text and coated both sides.

5. Failure to follow these rules could result in back charges from Office Star Products.

OFFICE STAR®
PRODUCTS