Mirror

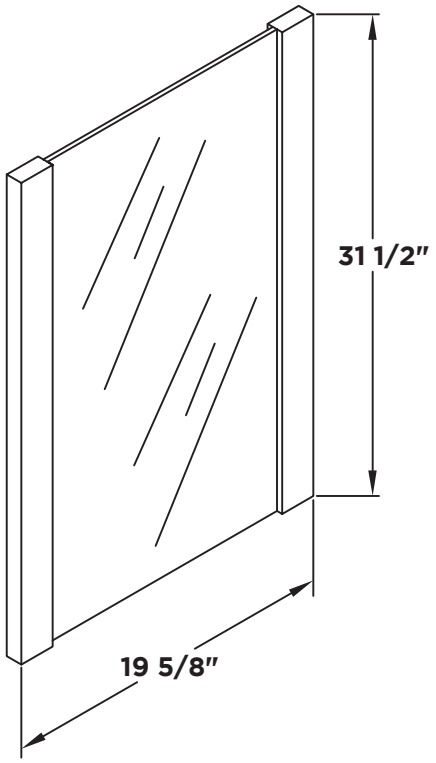

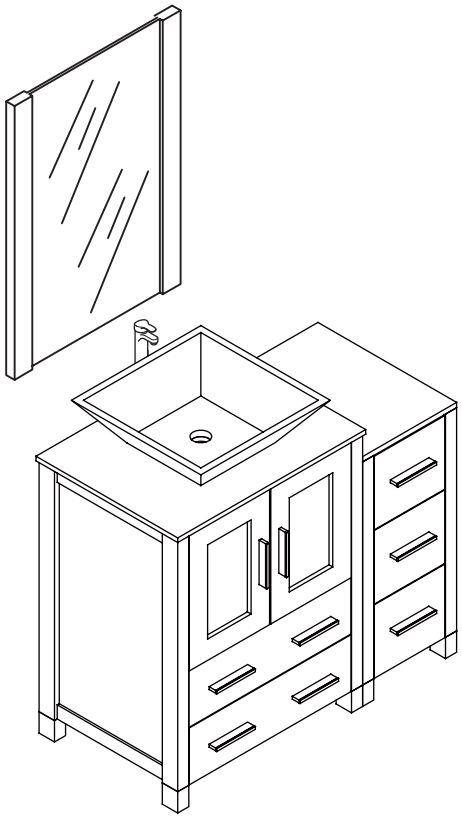

Vanity Front

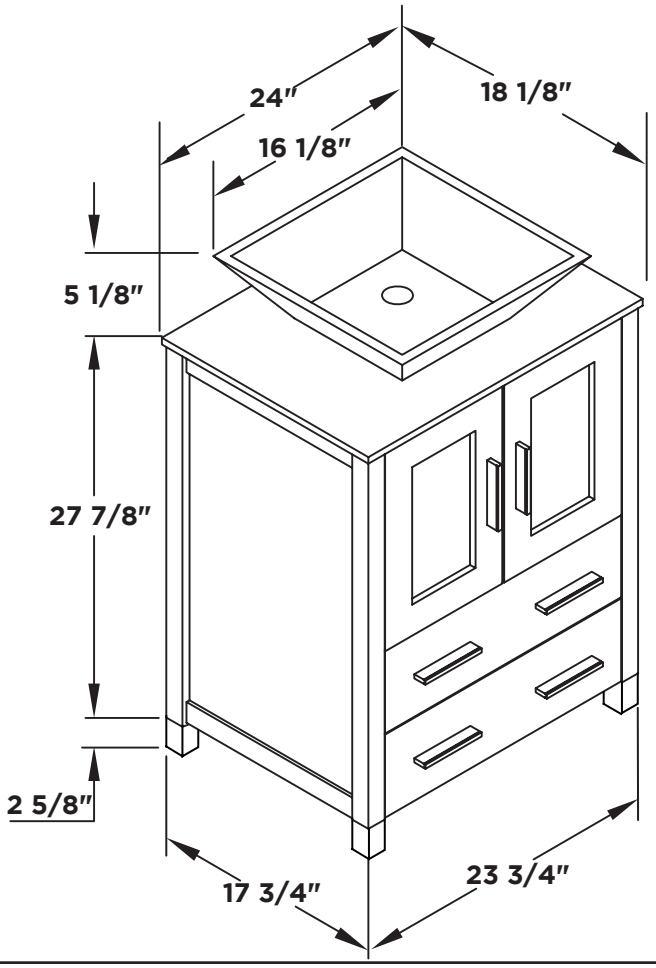

Vanity Back

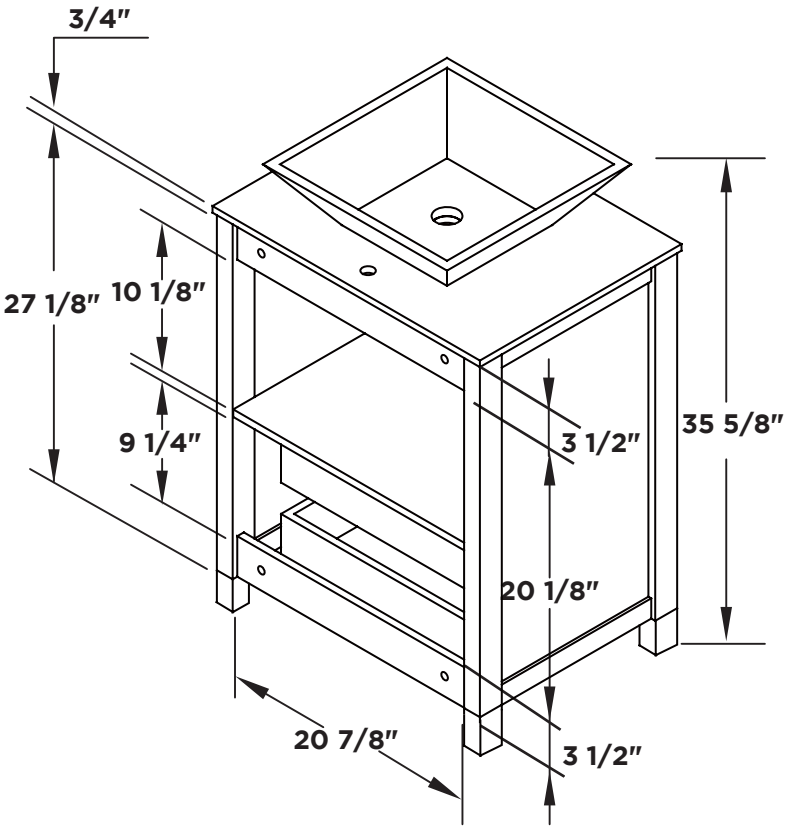

©2013 Fresca ™ All rights reserved. This material may not be reproduced, displayed, modified or distributed without the express prior written permission of the copyright holder.

TOOLS FOR ASSEMBLY

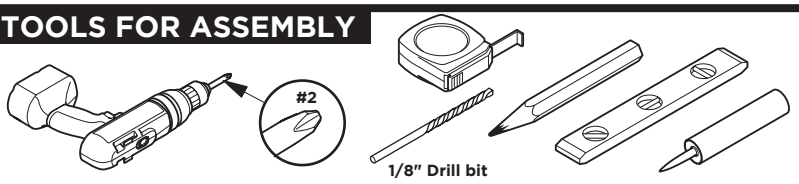

Side Cabinet Front

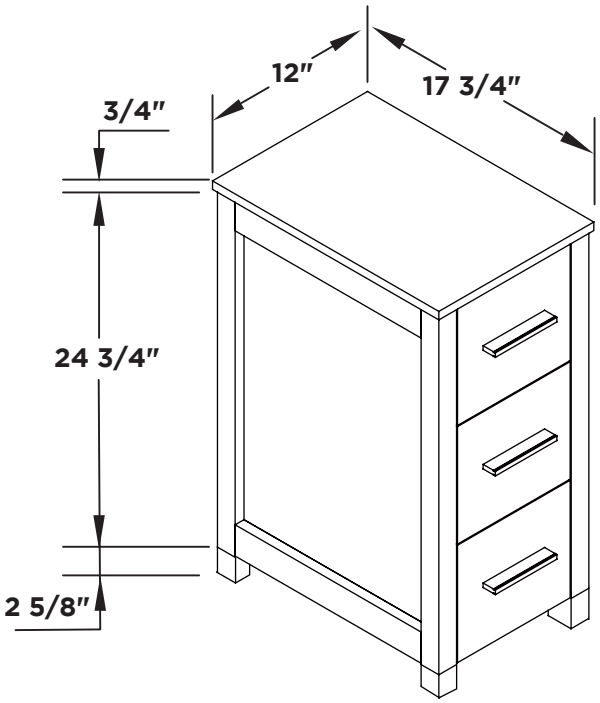

Side Cabinet Back

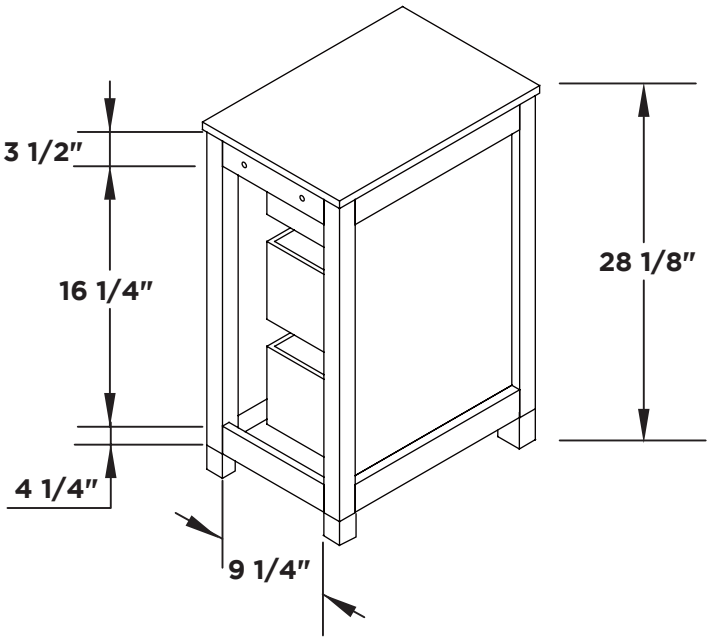

MIRROR INSTALLATION

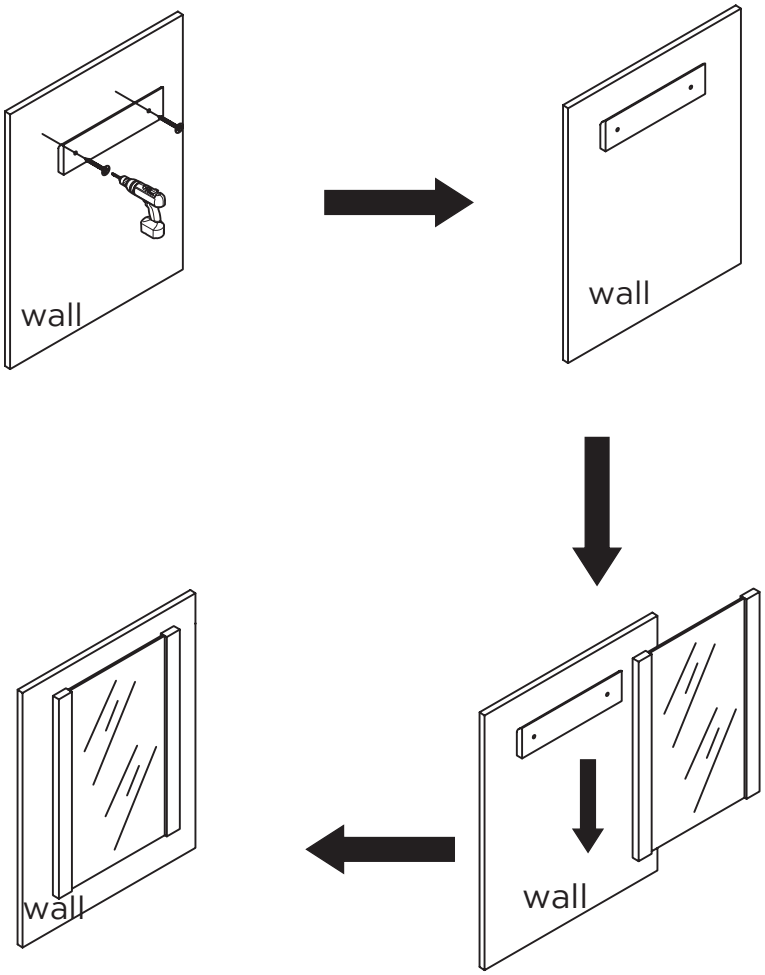

©2013 Fresca ™ All rights reserved. This material may not be reproduced, displayed, modified or distributed without the express prior written permission of the copyright holder.

DRAWER REMOVAL & INSTALLATION

REMOVAL

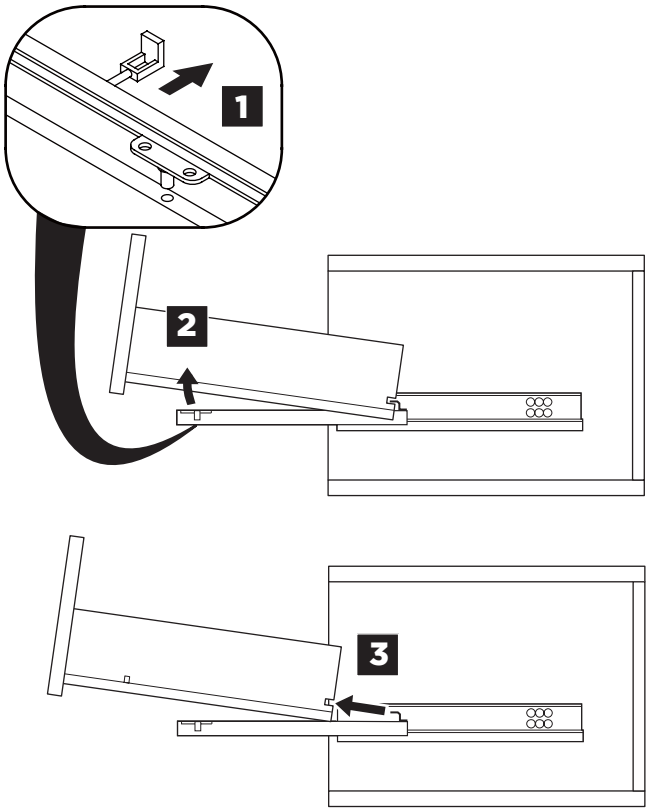

INSTALLATION

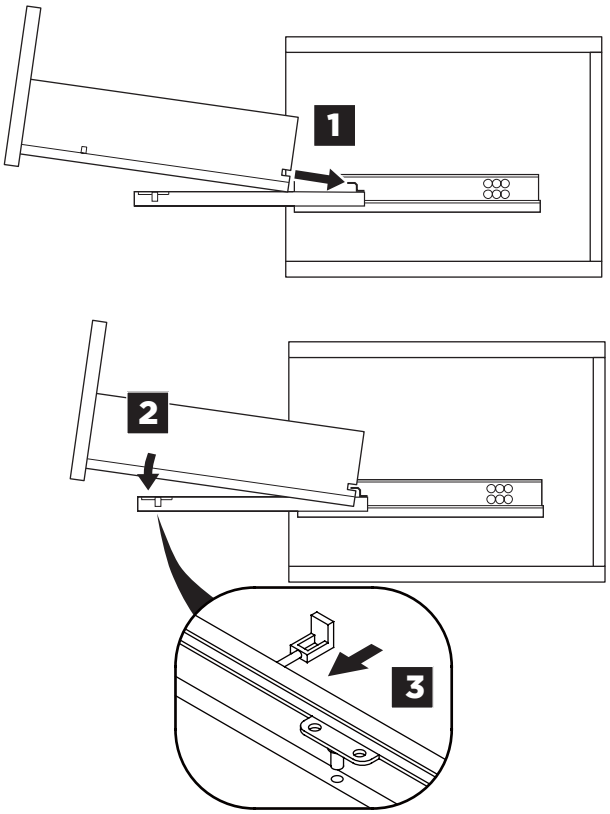

1 Install leg

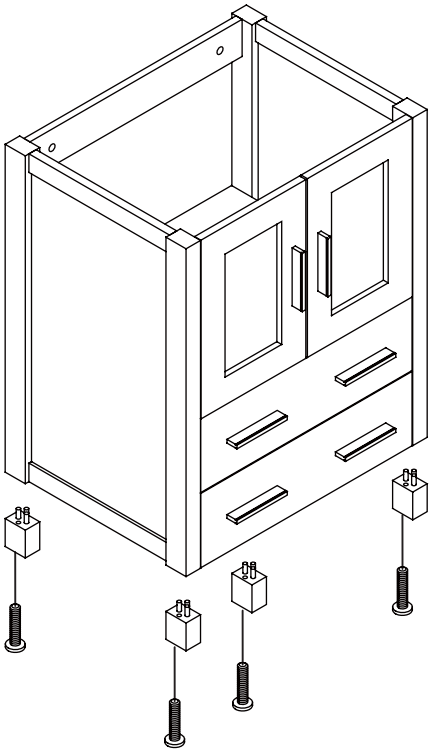

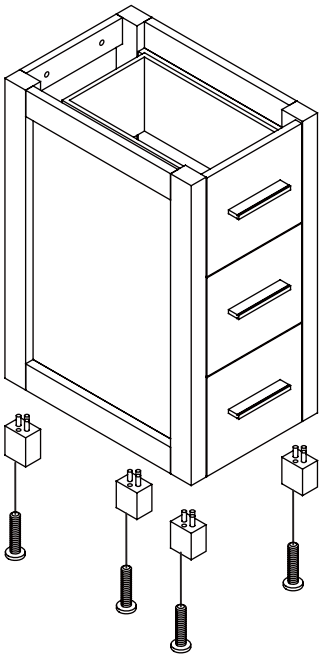

©2013 Fresca ™ All rights reserved. This material may not be reproduced, displayed, modified or distributed without the express prior written permission of the copyright holder.

2 Remove drawer

3 Install cabinet

IMPORTANT: Consult an expert for the proper screws/bolts to use when attaching to various wall constructions. Screws provided do not attach to all wall construction types.

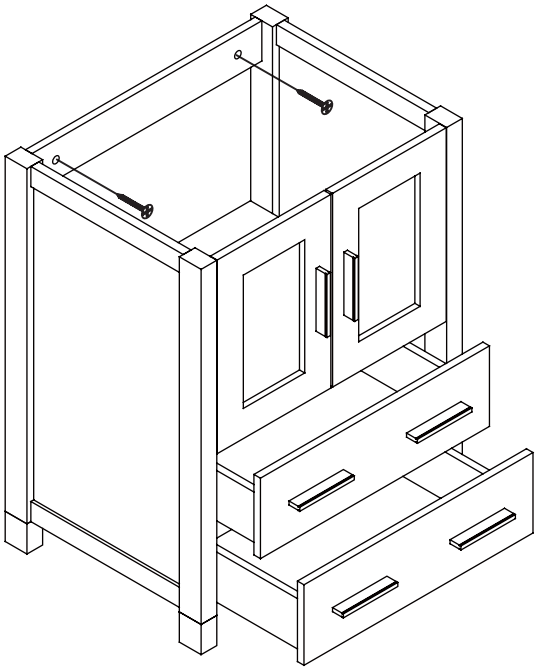

4 Install top panel

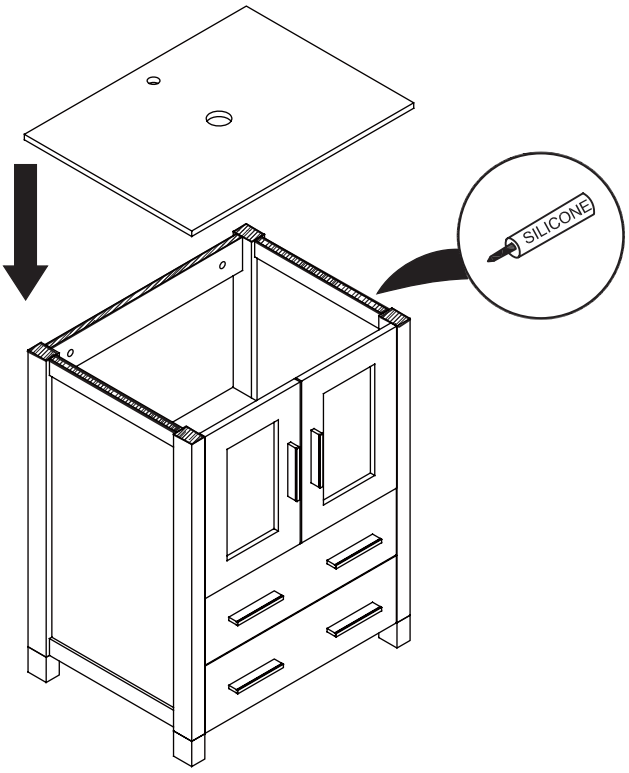

5 Install sink

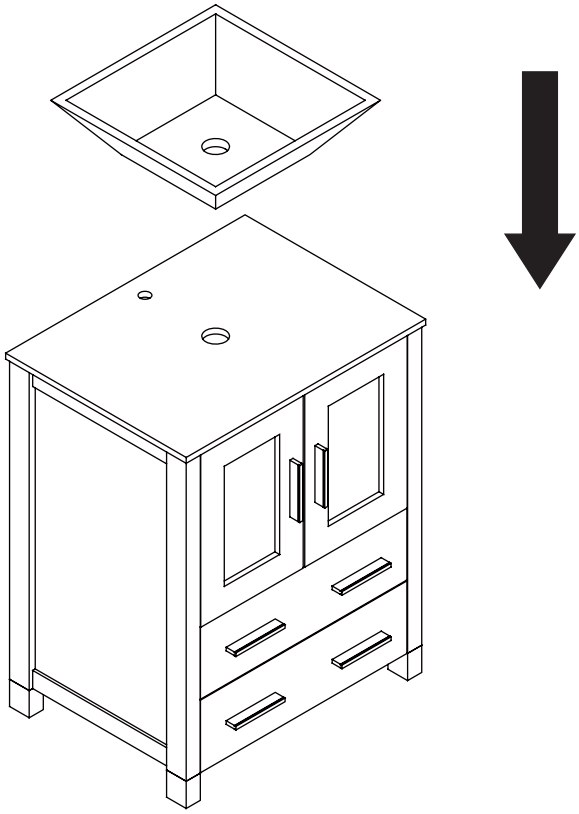

6 Remove side cabinet drawer

7 Install side cabinet

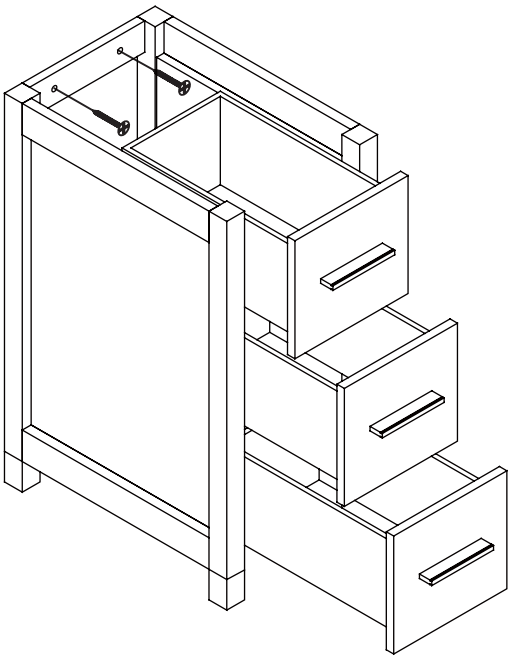

©2013 Fresca ™ All rights reserved. This material may not be reproduced, displayed, modified or distributed without the express prior written permission of the copyright holder.

8 Install side cabinet top panel

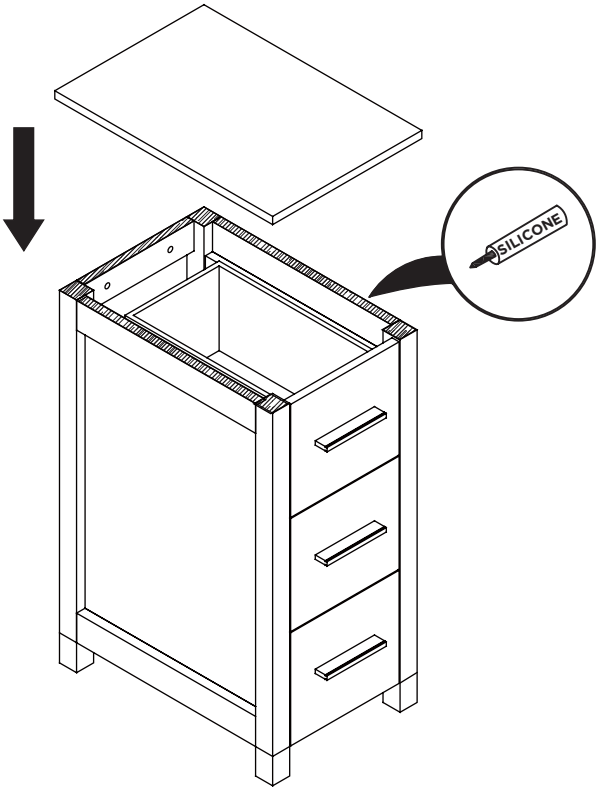

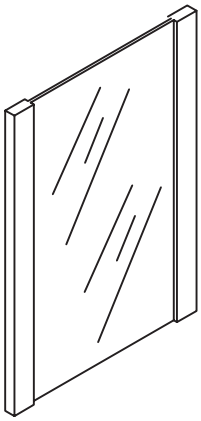

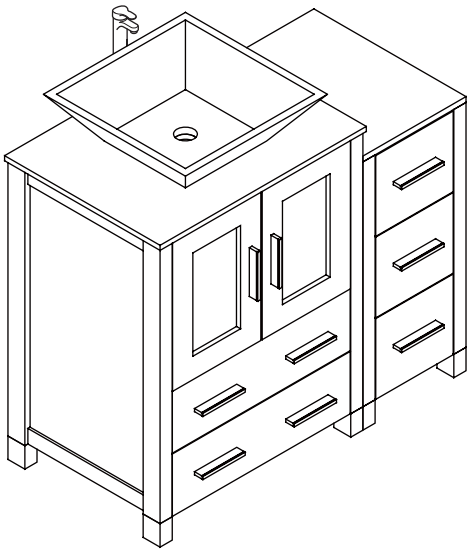

©2013 Fresca ™ All rights reserved. This material may not be reproduced, displayed, modified or distributed without the express prior written permission of the copyright holder.