WATER CREATION

MODEL: F2-0009

LAVATORY FAUCET INSTALLATION GUIDE

BEFORE YOU BEGIN

1) Shut off water supply.
2) Carefully inspect waste and supply tubing for signs of damage.
3) Replace waste or supply tubing if necessary

A) SPOUT INSTALLATION

1) Remove washer, lock nut and connect tee.
2) Apply plumbers' putty or sealant.
3) Locate mounting hole and insert spout into deck or lavatory.
4) Screw and tighten washers, lock nut onto the shank and secure the spout
5) Insert pop-up rod into the spout.
6) Screw and tighten the connect tee to the shank.
7) Remove excessive plumbers' putty or sealant.

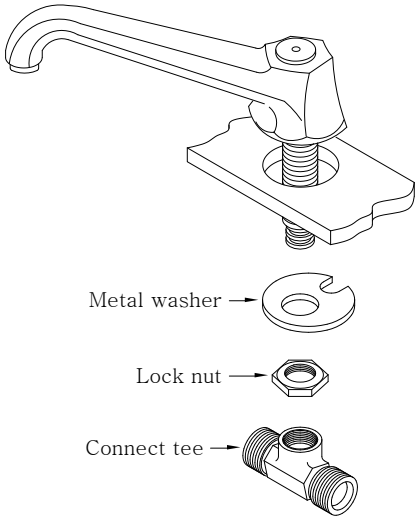

TOOLS AND MATERIALS

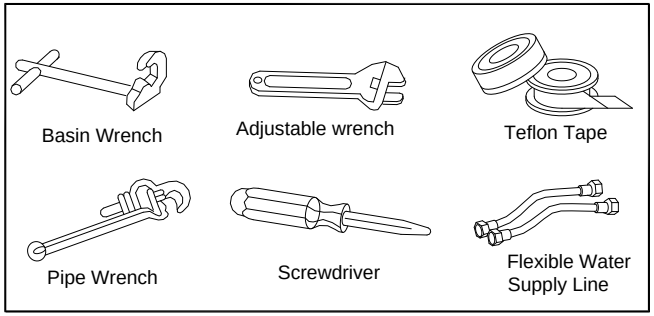

B) HANDLE VALVE INSTALLATION

1) Assemble the longer flexible hose with valve body.
2) Place lower plastic washer and lock nut over valve body.
3) Insert valve body from under the sink.
4) Place upper rubber washers and escutcheon on valve spindle.
5) Adjust position of valve body. Secure valve body with lock nut and escutcheon.
6) Place handle onto spindle.
7) Tighten handle with screw.

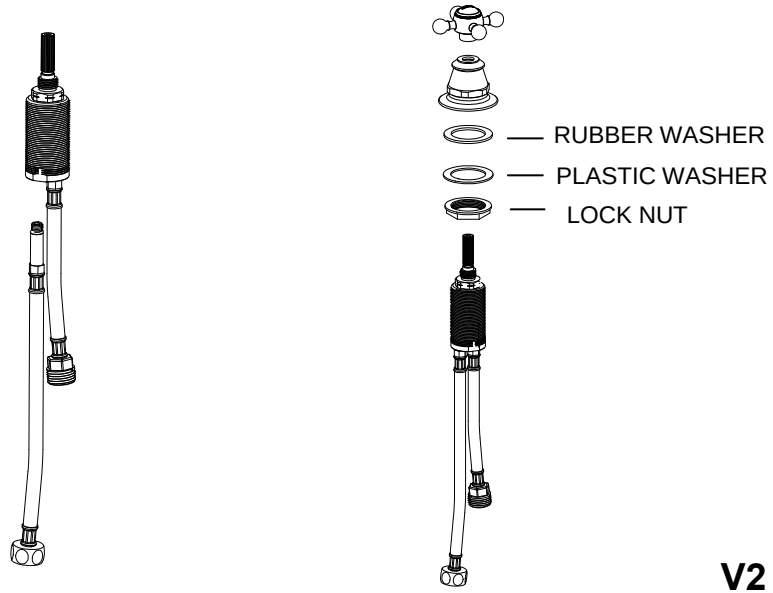

V2

C) FLEXIBLE HOSE INSTALLATION

1) Connect flexible hoses to supply tee.
2) Secure hoses with wrench. Do not over tighten.
3) Circle the excessive part of hoses as shown in figure below.

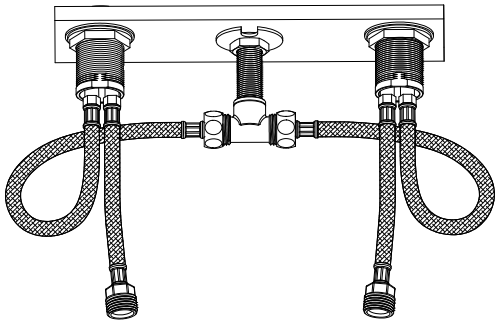

D) DRAIN WASTE INSTALLATION

1) Install the drain body on the shank.
2) Secure pivot rod into pivot rod opening. (on the side of drain body)
3) Adjust the position of rod strap.
4) Secure rod strap to pivot rod with spring clip.
5) Locate end of pull-up rod of spout.
6) Insert pull-up rod into rod strap.
7) Secure pull-up rod with screw.

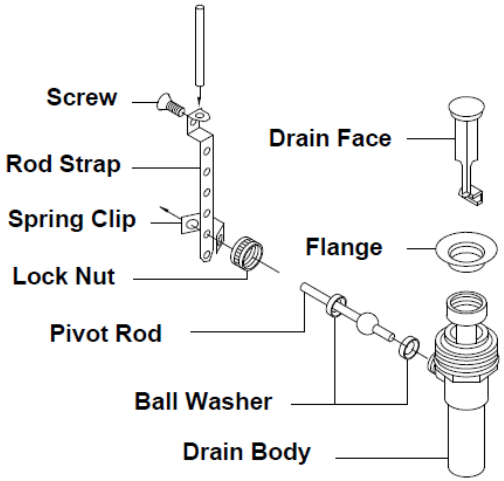

MODEL: F2-0009

E) SUPPLY CONNECTION

1) Install lavatory according to manufacturer's instructions.
2) Connect hoses (not provided) to angle stops.
3) Tighten all connections.

*** VERY IMPORTANT ***

4) Flush out water for two minutes before connect hose to faucet valve.
(This act to avoid debris trapped the flow regulator)

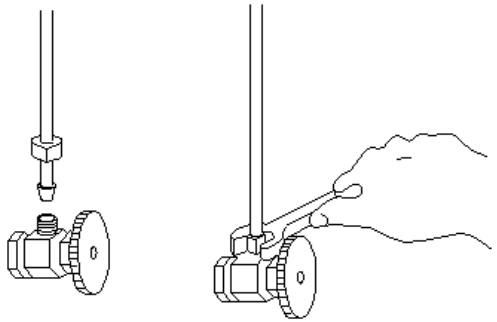

F) INSTALLATION CHECKOUT

1) Ensure all connections are tightened properly.
2) Turn on main water supply.
3) Turn on and off cold and hot water respectively.
4) Turn on both hot and cold water and turn off. Check for leaks.
5) Remove the aerator cap and aerator. Check for debris. Clean of necessary.
6) Reinstall aerator.



COMPLETE INSTALLATION

V2