TIPS:

Your suggestions and comments for Costway are really important to us!
We sincerely solicit you to go back to our shop and leave a good rating in just a simple click. It would be quite encouraging if you could kindly do so like below:

★★★★★ **Great products so far**
February 24, 2018
Great product so far. Fast delivery, easy setup, and working without any issues.

With your inspiring rating, Costway will be more consistent to offer you EASY SHOPPING EXPERIENCE, GOOD PRODUCTS and EFFICIENT SERVICE!

US office:Fontana
UK office:Ipswich

COSTWAY
WHERE THERE IS COSTWAY THERE IS HOME

COSTWAY
WHERE THERE IS COSTWAY THERE IS HOME

USER'S MANUAL

Rrattan high chair
HW52954

PRODUCT ASSEMBLY

Ⓐ LEFT ARMREST 1PC	Ⓑ 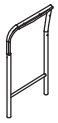 RIGHT ARMREST 1PC	Ⓒ SEAT 1PC	Ⓓ BACK 1PC
Ⓔ CONNER BAR 1PC	Ⓕ CONNER BAR 1PC	Ⓖ BOLT M6*30 4PC	Ⓗ BOLT M6*35 1PC
Ⓘ BOLT M6*50 4PC	Ⓙ BOLT M6*15 8PC	Ⓚ WASHER 17PC	Ⓛ HEXAG ONAL WAENCH 1PC

1

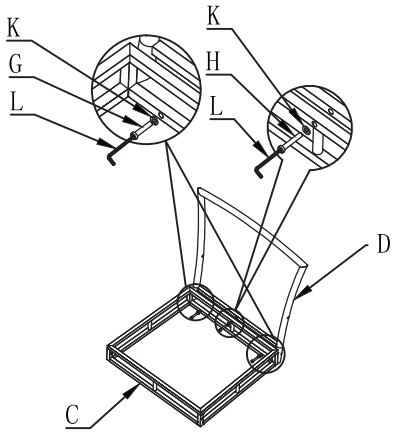

PRODUCT ASSEMBLY

2

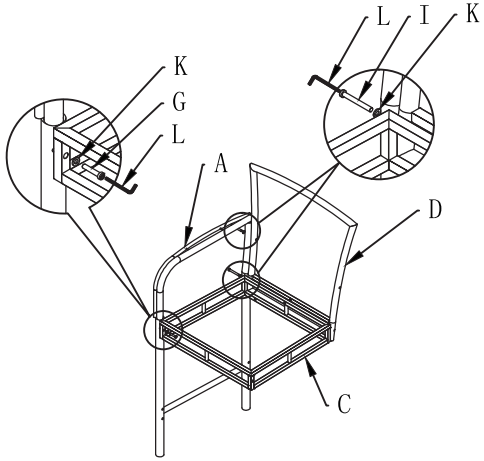

3

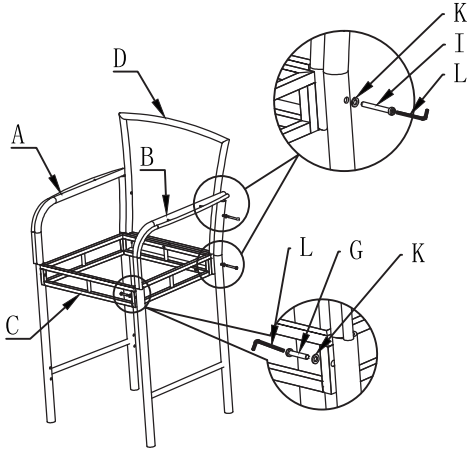
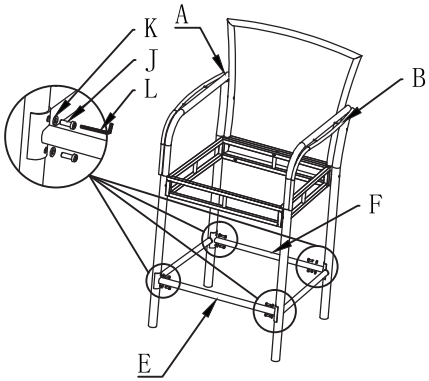
4